Opto Plus LED Corp.
Through Hole Type LED Display
OPD-B1025A0F6

EDIT HISTORY

Version A: APR. 16, 2024

Preliminary Spec.

Confidential Document

Opto Plus LED Corp. 7F-3, No.496 , Bannan Road, Jhonghe Dist., New Taipei City 235, Taiwan (R.O.C)
Website: www.opledtw.com E-mail: sales@opledtw.com Tel: 886-2-2222-5698 Fax: 886-2-2222-2566

Disclaimer:
Subject to change without notice

www.opledtw.com

Opto Plus LED Corp.
Through Hole Type LED Display
OPD-B1025A0F6

FEATURES

- Large segments, closely sepced.
- Case mold type.
- Low current operation.
- RoHS Compliant, Pb Free.

DESCRIPTION

The OPD-B1025A0F6 is a 10.2mm X 25.6mm
10 rectangular light sources array display, Built-in programmable LEDs.
This device is 256-step gray-scale output to allow 16,777,216 color display,
Built-in oscillator 20M.
The device is Opto Plus LED Corp standard LED Display.
The device has face and segment option, please refer to **PRODUCT APPEARANCE**.

DEVICE

PART NO.		DESCRIPTION
	OPD-B1025A0F6-GW	Single data line｜Gray face｜White segment
	OPD-B1025A0F6-BW	Single data line｜Black face｜White segment

RoHS Compliance

Pb Free.

Confidential Document

Opto Plus LED Corp. 7F-3, No.496 , Bannan Road, Jhonghe Dist., New Taipei City 235, Taiwan (R.O.C)
Website: www.opledtw.com E-mail: sales@opledtw.com Tel: 886-2-2222-5698 Fax: 886-2-2222-2566

Disclaimer:
Subject to change without notice

Opto Plus LED Corp.
Through Hole Type LED Display
OPD-B1025A0F6

MECHANICAL DIMENSIONS

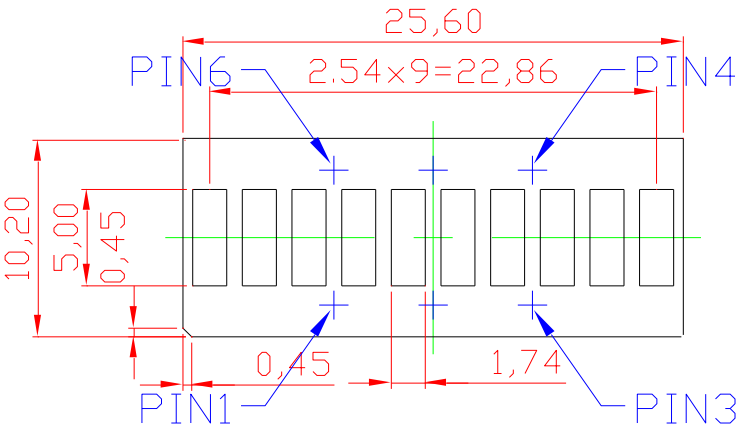

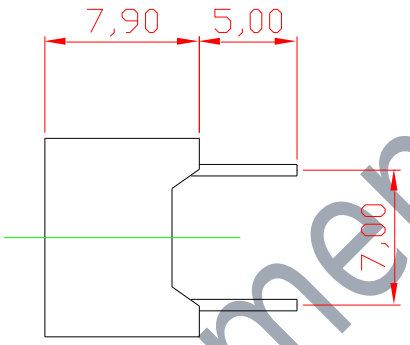

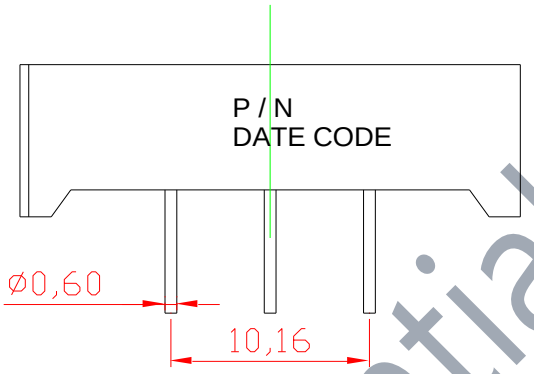

NOTE:
1. Dimension in millimeters (inches),
   And tolerances are ±0.25mm (.01") specified.
2. Bending<Length : 2%
3. PIN 2: N/A PIN. [or Backup Data Signal output from D10.]
4. Support BI backup [PIN 6] input data line
   to prevent data input failure from malfunction DI.

Confidential Document

Opto Plus LED Corp. 7F-3, No.496 , Bannan Road, Jhonghe Dist., New Taipei City 235, Taiwan (R.O.C)
Website: www.opledtw.com E-mail: sales@opledtw.com Tel: 886-2-2222-5698 Fax: 886-2-2222-2566

Disclaimer:
Subject to change without notice

TYPICAL INTERNAL EQUIVALENT CIRCUIT

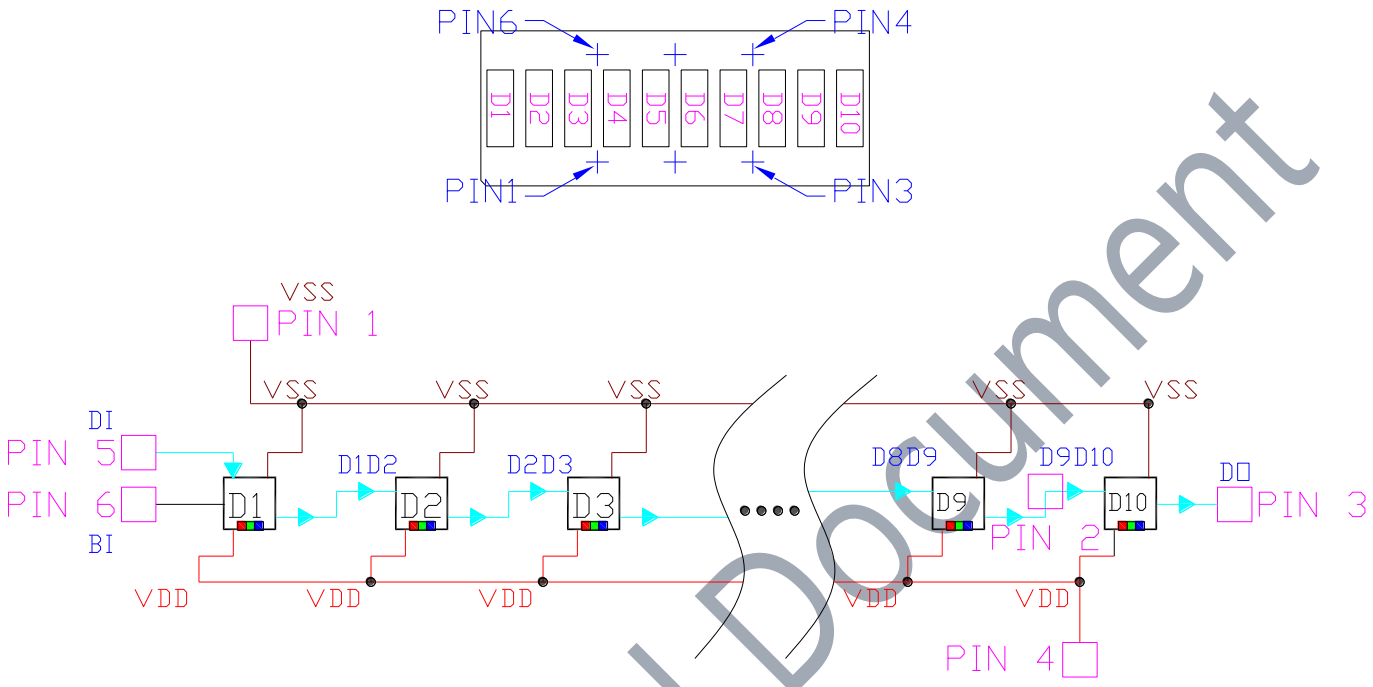

PIN 1 : Ground.

PIN 2 : Backup Data Signal Input From D10.

PIN 3 : Control Data Signal Output.

PIN 4 : Power Supply.

PIN 5 : Control Data Signal Input.

PIN 6 : Backup Data Signal Input

※EMITTED COLOR：RED & GREEN & BLUE

IN THE PRACTICAL APPLICATION CIRCUIT, THE SIGNAL INPUT AND OUTPUT PINS OF THE IC SIGNAL INPUT AND OUTPUT PINS SHOULD BE CONNECTED TO THE SIGNAL INPUT AND OUTPUT TERMINALS. IN ADDITION, IN ORDER TO MAKE THE IC CHIP IS MORE STABLE, EVEN THE CAPACITANCE BETWEEN DISPLAY IS ESSENTIAL BACK; APPLICATION: DISPLAY TRANSMISSION DISTANCE IS SHORT, SUGGESTED IN SIGNAL IN TIME THE CLOCK LINE INPUT AND OUTPUT END OF EACH CONNECTED IN SERIES PROTECTION RESISTORS(ABOUT 470 OHMS). APPLICATION: FOR MODULE OR GENERAL SPECIAL-SHAPED PRODUCTS, DISPLAY TRANSMISSION DISTANCE IS LONG, BECAUSE OF DIFFERENT WIRE AND TRANSMISSION DISTANCE, IN THE SIGNAL IN TIME CLOCK AT BOTH ENDS OF THE LINE ON GROUNDING PROTECTION RESISTANCE WILL BE SLIGHTLY DIFFERENT;

TO THE ACTUAL USE OF FIXED;

Confidential Document

PRODUCT APPEARANCE

The most common reflector color and segment color are show in below diagram.

-GW	-BW
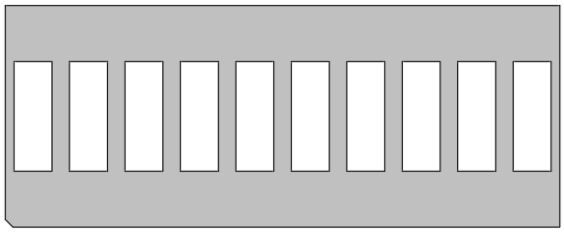	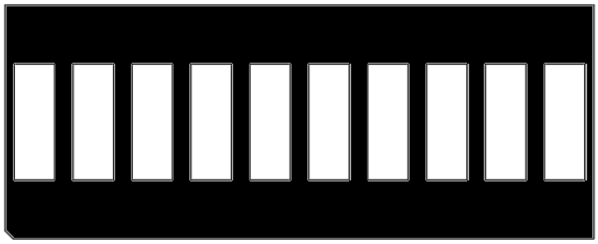
※ REFLECTOR COLOR: Gray ※ SEGMENT COLOR: White	※ REFLECTOR COLOR: Black ※ SEGMENT COLOR: White

Opto Plus can customize reflector and segment colors by customer's request. If you have these request please visit www.opledtw.com or contact sales@opledtw.com for more **Standard Product Customization** information.

Part NO. related to reflector and segment colors show as table below.

PART NO.	DESCRIPTION
OPD-B1025A0F6-GW	Single data line｜Gray face｜White segment
OPD-B1025A0F6-BW	Single data line｜Black face｜White segment

Confidential Document

● F6: FULL COLOR (AlInGaP/InGaP)

ABSOLUTE MAXIMUM RATING AT Ta=25° (Per SMD Chip)

Parameter	Symbol	Maximum Rating	Unit
Supply Voltage	VDD	6.5	V
Power Dissipation	PD	<400	mW
Maximum Output Current	ILEDOUT	5	mA
Operating temperature	T_{OP}	-25 to + 85	°C
Storage temperature	T_{ST}	-25 to + 85	°C
Welding temperature	T_M	300(<8sec.)	°C

Confidential Document

ELECTRICAL - OPTICAL CHARACTERISTICS AT TA=25℃ (PER SMD CHIP)

Parameter	Symbol	Min.	Typ.	Max.	Unit	Note
Supply Voltage	VDD	3.3	5	5.5	V	
Operation Current	I_{DD}		1		mA	R/G/B without load
Sleep Mode Current	Isleep		5		uA	
Input High "H" of DI、BI	V_{IH}	0.7*VDD		VDD+0.4	V	
Input Low "L" of DI、BI	V_{IL}	-0.4		0.2*VDD	V	
Output High "H" of DO	V_{OH}	4.5			V	I_{OH}=3mA
Output Low "L" of DO	V_{OL}			0.4	V	I_{OL}=3mA
R/G/B Sink Current	I_{SK}	2.9	3	3.1	mA	Max. 3mA option
		4.8	5	5.2	mA	Max. 5mA option
R/G/B Current Gain	Glevel		3/17		mA/level	Max. 3mA option
			5/17		mA/level	Max. 5mA option
DI / BI Input Leakage	Ileak			1	uA	V_{DI}=V_{BI}=VDD=5V
R/G/B off Leakage Current	I_{off}			1	uA	$V_{R/G/B}$=5V, PWM off

Parameter	Symbol	Min.	Typ.	Max.	Units	Note
Propagation delay time	tPLZ			80	ns	DI → DO, load=30pF
	tPZL			80	ns	
Rising time	tTHL		15		ns	
Falling time	tTLH		15		ns	
Rising time	tR		50		ns	ISK(R/G/B) =3/5mA, load=30pF
Falling time	tF		50		ns	
Data rate	Fdata		800		KHz	

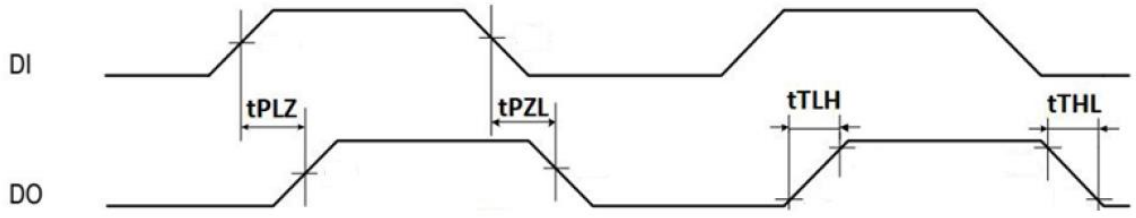

Opto Plus LED Corp. 7F-3, No.496 , Bannan Road, Jhonghe Dist., New Taipei City 235, Taiwan (R.O.C)
Website: www.opledtw.com E-mail: sales@opledtw.com Tel: 886-2-2222-5698 Fax: 886-2-2222-2566

Disclaimer:
Subject to change without notice

Data Transfer Protocol

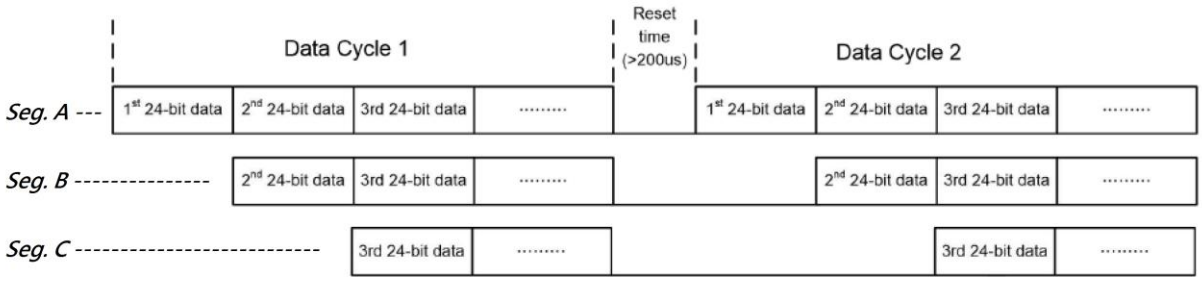

The single wire data transfer protocol supports 24-bit data for each LED RGB display data refresh. The IC receives 24-bit data and passes the remaining data to next LED. The 24-bit data consist of green, red and blue data, each with 8-bit width, and are transferred with MSB first.

R7	R6	R5	R4	R3	R2	R1	R0	G7	G6	G5	G4	G3	G2	G1	G0	B7	B6	B5	B4	B3	B2	B1	B0

The transferred data are recognized based on the pulse widths received by the IC. A low bit 0 is represented by a 0.3us high pulse followed by a 0.9us low pulse. A high bit 1 is represented by a 0.9us high pulse followed by a 0.3us low pulse. A low pulse ≧ 200us is used to issue a reset command to the IC to start a new cycle of serial commands.

Confidential

Sequence Chart

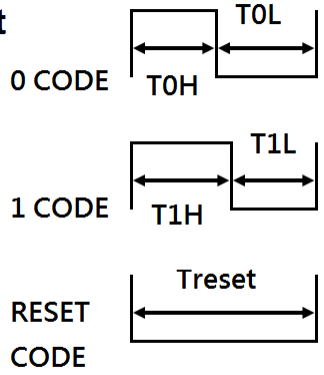

(T0H:0.3us+0.15us,T0L:0.9us+0.15us)
(T1H:0.9us+0.15us,T1L:0.3us+0.15us)

Opto Plus LED Corp. 7F-3, No.496 , Bannan Road, Jhonghe Dist., New Taipei City 235, Taiwan (R.O.C)
Website: www.opledtw.com E-mail: sales@opledtw.com Tel: 886-2-2222-5698 Fax: 886-2-2222-2566

Disclaimer:
Subject to change without notice

Sample CODE

```
// Please write using Arduino IDE.

// Make sure that the Adafruit_NeoPixel library has been installed.

#include <Adafruit_NeoPixel.h>
#define LED_PIN     4   // Signal pin for the LED Display.
#define LED_COUNT  10   // Number of LEDs in the LED Display.
Adafruit_NeoPixel strip(LED_COUNT, LED_PIN, NEO_GRB + NEO_KHZ800);
//  Function used to create colorful effects
void setup() {
  strip.begin();
  strip.show();
  strip.setBrightness(127); //Set brightness to approximately 1/2 (maximum value = 255)
}
void loop() {
    strip.setPixelColor(0, 255, 0, 0); // Turn on D1-Red
    strip.setPixelColor(1, 255, 0, 0); // Turn on D3-Red
    strip.setPixelColor(8,   0, 0, 0); // Turn off
    strip.setPixelColor(9,   0, 0, 0); // Turn off
    strip.show();  // Update to display
    delay(500); // delay 0.5 seconds.
    strip.setPixelColor(0, 0, 0, 0); // Turn off
    strip.setPixelColor(1, 0, 0, 0); // Turn off
    strip.setPixelColor(8, 0, 255, 0); // Turn on D9-Green
    strip.setPixelColor(9, 0, 255, 0); // Turn on D10-Green
    strip.show();  // Update to display
    delay(500); // delay 0.5 seconds.
}
```


Opto Plus LED Corp. 7F-3, No.496 , Bannan Road, Jhonghe Dist., New Taipei City 235, Taiwan (R.O.C)
Website: www.opledtw.com E-mail: sales@opledtw.com Tel: 886-2-2222-5698 Fax: 886-2-2222-2566

Disclaimer:
Subject to change without notice

LUMINOUS INTENSITY (IV) BIN :

BIN	**N**	**O**	**P**
(Red) @5mA	80-105 mcd	106-134 mcd	135-160 mcd

BIN	**Q**	**R**	**S**
(Green) @5mA	180-205 mcd	206-234 mcd	235-260 mcd

BIN	**K**	**L**	**M**
(Blue) @5mA	30-42 mcd	43-57 mcd	58-70 mcd

Note: It maintains a tolerance of ±10% on Luminous Intensity.

WAVELENGTH(ƛD) BIN :

BIN	**7**	**8**	**9**
(Red) @5mA	618-619 nm	620-623 mcd	624-625 nm

BIN	**4**	**5**	**6**
(Green) @5mA	520-524 nm	525-529 mcd	530-535 nm

BIN	**1**	**2**	**3**
(Blue) @5mA	460 – 464 nm	465-469 nm	470 – 474 nm

Note: It maintains a tolerance of ±0.5nm on Wavelength BIN.

Confidential Document

Opto Plus LED Corp. 7F-3, No.496 , Bannan Road, Jhonghe Dist., New Taipei City 235, Taiwan (R.O.C)
Website: www.opledtw.com E-mail: sales@opledtw.com Tel: 886-2-2222-5698 Fax: 886-2-2222-2566

Disclaimer:
Subject to change without notice

RECOMMEND SOLDERING PROFILE

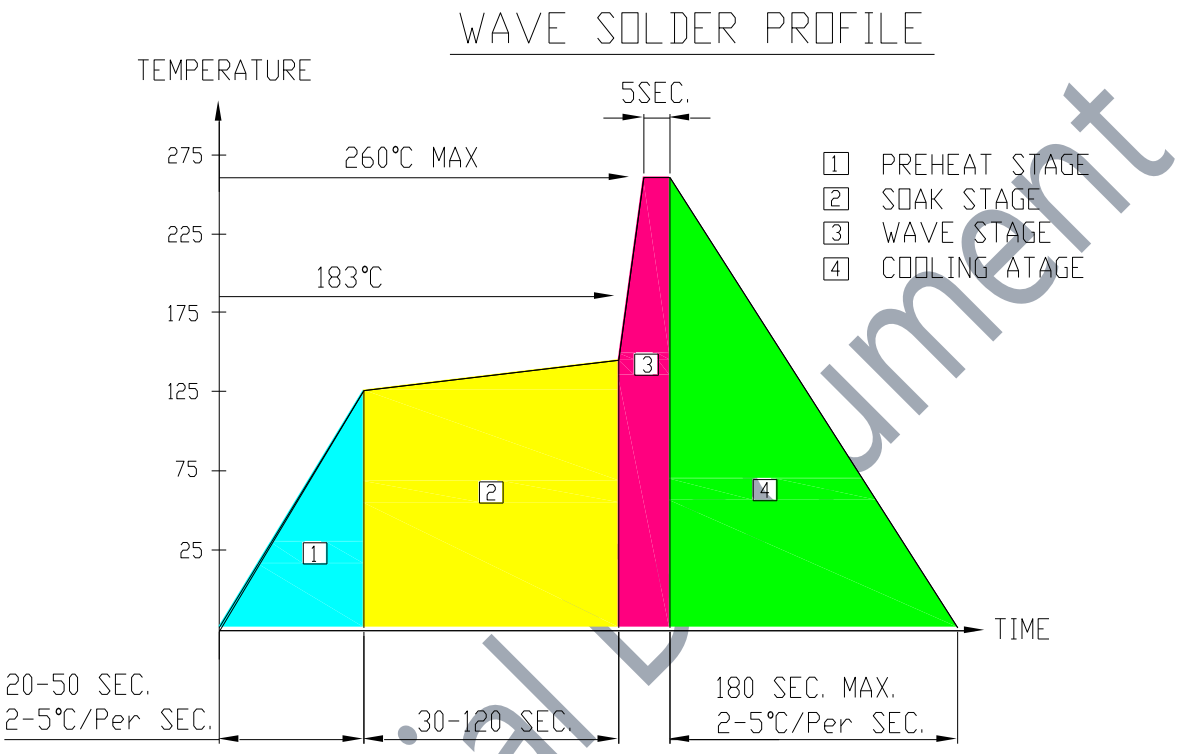

Note:

- Recommend pre-heat temperature of 105°C or less (as measured with a thermocouple attached to the LED pins) prior to immersion in the solder wave with a maximum solder bath temperature of 260°C
- Peak wave soldering temperature between 245°C ~ 225°C for 3 sec (5 sec max)
- No more than one wave soldering pass

SOLDERING IRON

Basic spec is ≦4 sec when 260˚C. If temperature is higher, time should be shorter (+10˚C→1 sec). Power dissipation of Iron should be smaller than 15W, and temperature should be controllable. Surface temperature of the device should be under 230˚C.

REWORK

Customer must finish rework within ≦3 sec under 350℃.

The head of soldering iron cannot touch copper foil.

Confidential Document

Opto Plus LED Corp. 7F-3, No.496 , Bannan Road, Jhonghe Dist., New Taipei City 235, Taiwan (R.O.C)
Website: www.opledtw.com E-mail: sales@opledtw.com Tel: 886-2-2222-5698 Fax: 886-2-2222-2566

Disclaimer:
Subject to change without notice

PACKAGE DIMENSIONS

228 PCS(12X19) / 1 ESD Polyform

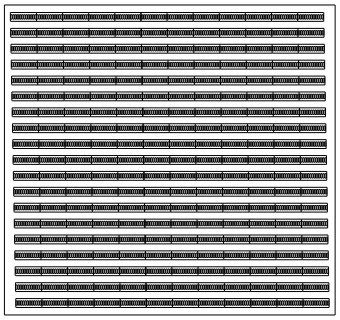

1140 PCS / 5 ESD Polyform / 1 ESD BAG



A reference for packing within ESD bag.

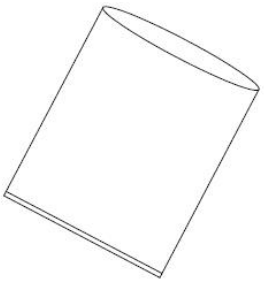

ESD BAG SIZE : 650 x 550 mm

2280 PCS / 2 ESD BAG / 1 OUTER CARTON



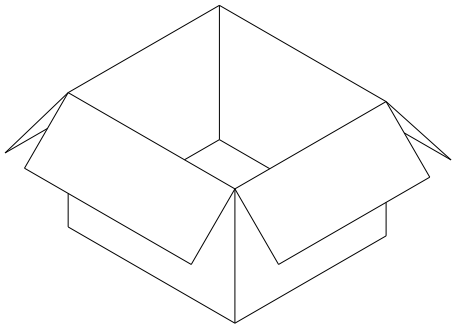

OUTER BOX SIZE : 430 x 390 x 300 mm

Note:

LED DISPLAY STANDARD STORAGED CONDITION

Product in the original packaging material state is the recommended storage conditions.

TERATURE CONDITION	HUMIDITY CONDITION
5° C ~ 30° C	Below 60%RH

If the storage conditions do not meet specification standards, the component pins may become oxidized requiring re-plating and re-sorting before use. Suggest customers consume LEDs as soon as possible, andavoid long-term storage of large inventories.

Confidential Document

Opto Plus LED Corp. 7F-3, No.496 , Bannan Road, Jhonghe Dist., New Taipei City 235, Taiwan (R.O.C)
Website: www.opledtw.com E-mail: sales@opledtw.com Tel: 886-2-2222-5698 Fax: 886-2-2222-2566

Disclaimer:
Subject to change without notice