Technical Data Sheet

TOP View LEDs

67-21/GPC-AL1N2B/2T

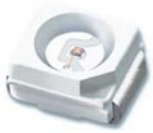

Features

- P-LCC-2 package.
- White package.
- Optical indicator.
- Colorless clear window.
- Wide viewing angle.
- Suitable for vapor-phase reflow, Infrared reflow and wave solder processes.
- Computable with automatic placement equipment.
- Available on tape and reel (8mm Tape).
- Pb-free.
- The product itself will remain within RoHS compliant version.

Descriptions

- The 67-21 series is available in soft orange, green,blue and yellow. Due to the package design, the LED has wide viewing angle and optimized light coupling by inter reflector. This feature makes the ideal for light pipe application. The low current requirement makes this device ideal for portable equipment or any other application where power is at a premium.

Applications

- Automotive: backlighting in dashboard and switch.
- Telecommunication: indicator and backlighting in telephone and fax.
- Flat backlight for LCD, switch and symbol.
- Light pipe application.
- General use.

Device Selection Guide

Chip		Lens Color
Material	Emitted Color	
AlGaInP	Pale Green	Water Clear

Ver.:2 Release Date:03/16/2017 狀態:Approved(正式發行)

Package Dimensions

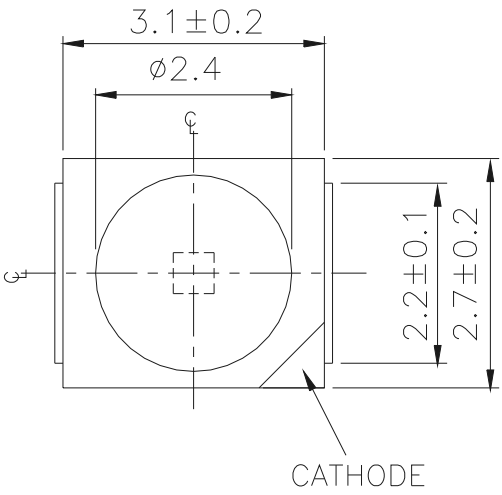

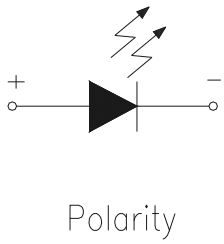

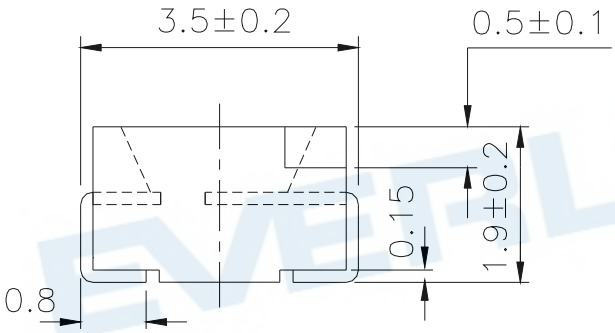

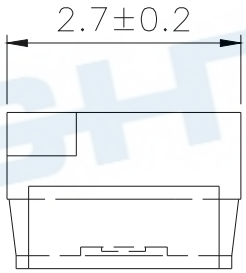

For reflow soldering (Proposal)

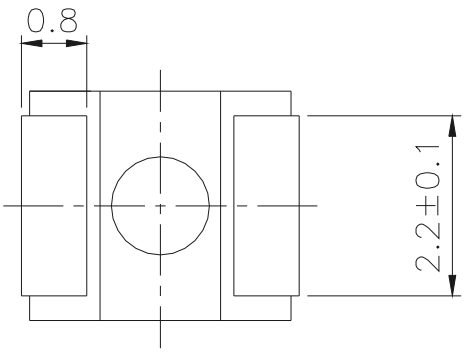

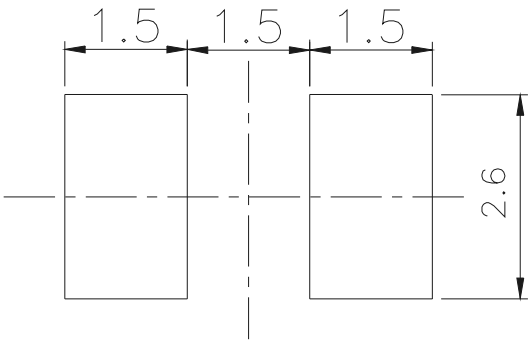

Absolute Maximum Ratings (Ta=25℃)

Parameter	Symbol	Rating	Units
Reverse Voltage	V_R	5	V
Forward Current	I_F	40	mA
Operating Temperature	Topr	-40 ~ +85	℃
Storage Temperature	Tstg	-40 ~ +100	℃
Electrostatic Discharge(HBM)	ESD	2000	V
Power Dissipation	Pd	100	mW
Peak Forward Current (Duty 1/10 @1KHz)	I_{FP}	80	mA
Soldering Temperature	Tsol	Reflow Soldering : 260 ℃ for 10 sec. Hand Soldering : 350 ℃ for 3 sec.	

Electro-Optical Characteristics (Ta=25℃)

Parameter	Symbol	Min.	Typ.	Max.	Unit	Condition
Luminous intensity	IV	11.5	-----	45.0	mcd	IF=20mA
Viewing Angle	2θ 1/2	-----	120	-----	deg	IF=20mA
Peak Wavelength	λ p	-----	561	-----	nm	IF=20mA
Dominant Wavelength	λ d	557.5	-----	567.5	nm	IF=20mA
Spectrum Radiation Bandwidth	△ λ	-----	20	-----	nm	IF=20mA
Forward Voltage	VF	1.75	-----	2.35	V	IF=20mA
Reverse Current	IR	-----	-----	10	μA	VR=5V

Notes:

1.Tolerance of Luminous Intensity ±10%

2.Tolerance of Dominant Wavelength ±1nm

3.Tolerance of Forward Voltage ±0.1V

Bin Range Of Dominant Wavelength

Group	Bin Code	Min.	Max.	Unit	Condition
A	C10	557.5	559.5	nm	I_F=20mA
	C11	559.5	561.5		
	C12	561.5	563.5		
	C13	563.5	565.5		
	C14	565.5	567.5		

Bin Rang Of Luminous Intensity

Bin	Min	Max	Unit	Condition
L1	11.5	14.5	mcd	I_F=20mA
L2	14.5	18.0		
M1	18.0	22.5		
M2	22.5	28.5		
N1	28.5	36.0		
N2	36.0	45.0		

Bin Rang Of Forward Voltage

Group	Bin	Min	Max	Unit	Condition
B	0	1.75	1.95	V	I_F=20mA
	1	1.95	2.15		
	2	2.15	2.35		

Notes:

1.Tolerance of Luminous Intensity ±10%

2.Tolerance of Dominant Wavelength ±1nm

3.Tolerance of Forward Voltage ±0.1V

Typical Electro-Optical Characteristics Curves

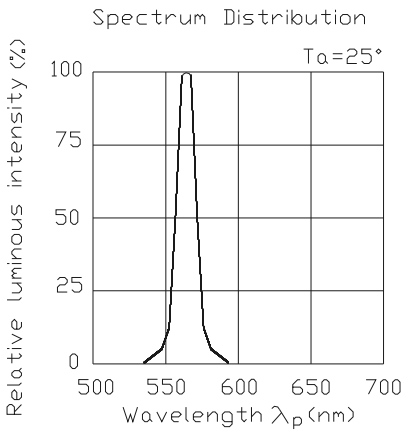

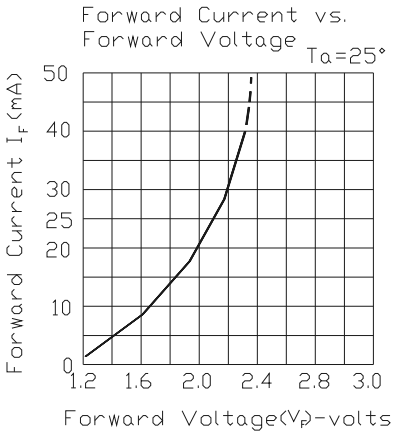

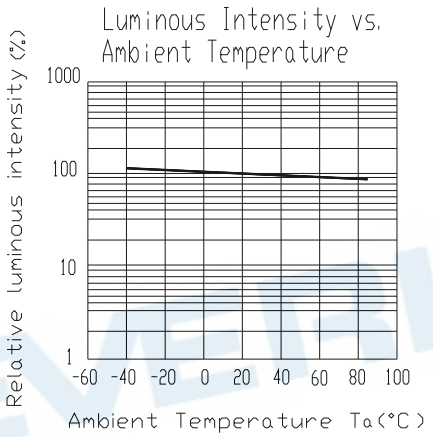

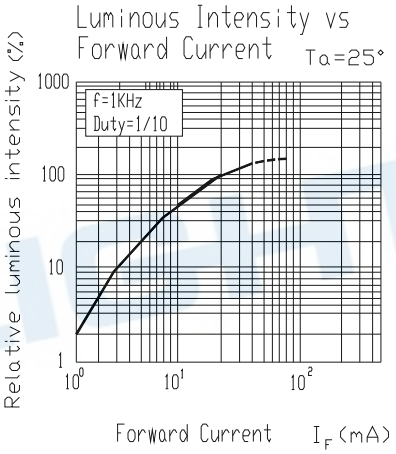

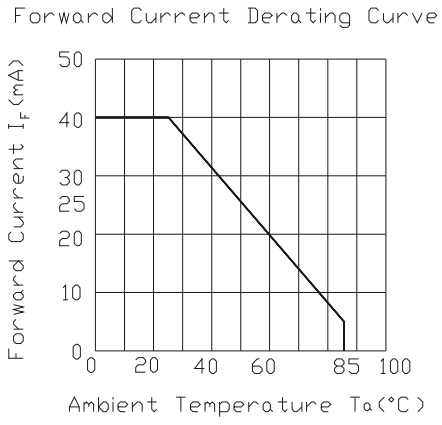

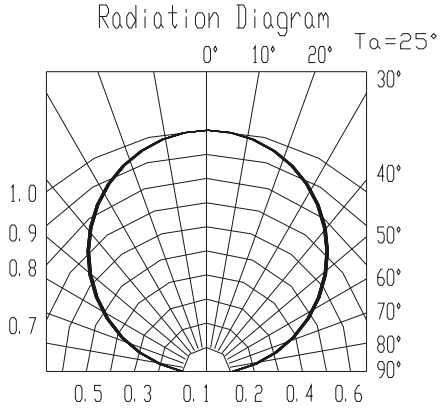

67-21/GPC-AL1N2B/2T

Label explanation

CAT: Luminous Intensity Rank

HUE: Dom. Wavelength Rank

REF: Forward Voltage Rank

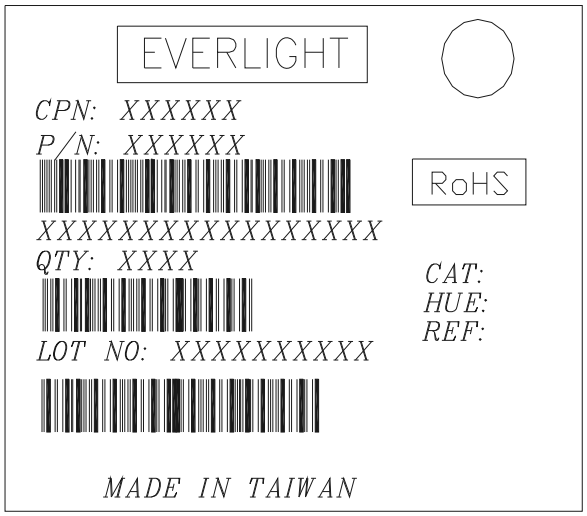

Reel Dimensions

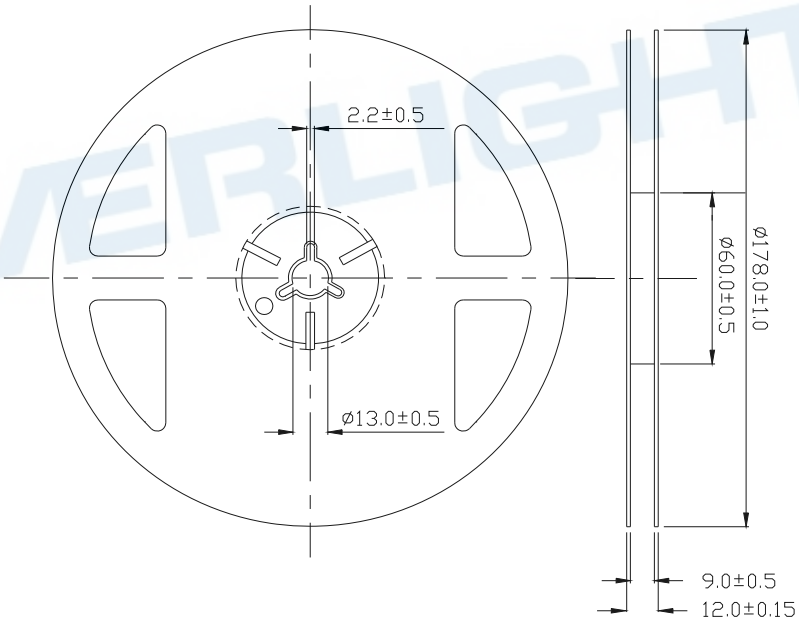

Note: The tolerances unless mentioned is ±0.1mm ,Unit = mm

Carrier Tape Dimensions: Loaded quantity 2000 PCS per reel.

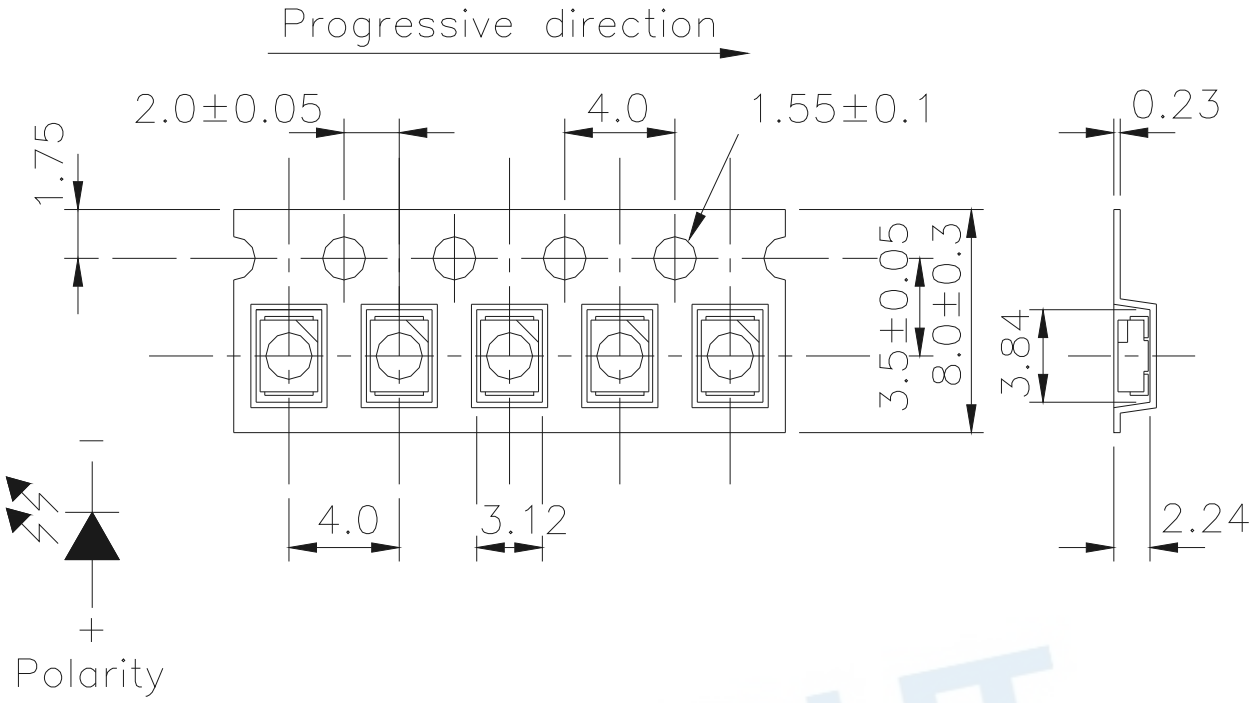

Note: The tolerances unless mentioned is ±0.1mm Unit = mm

Moisture Resistant Packaging

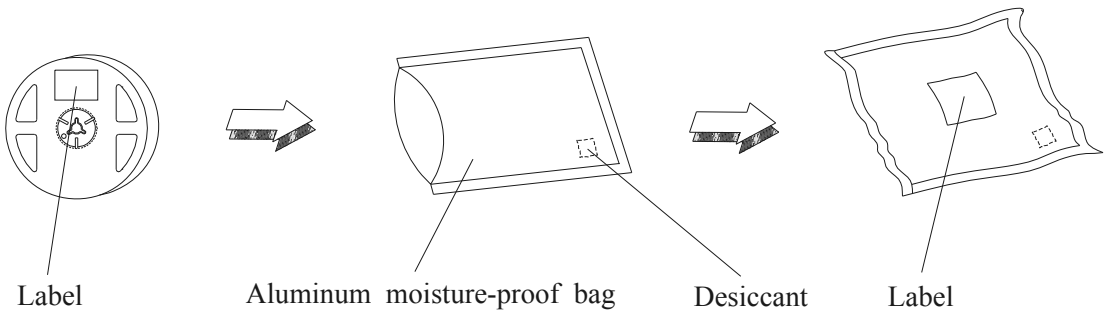

Reliability Test Items And Conditions

The reliability of products shall be satisfied with items listed below.

Confidence level：90%

LTPD：10%

No.	Items	Test Condition	Test Hours/Cycles	Sample Size	Ac/Re
1	Reflow Soldering	Temp. : 260℃±5℃ Min. 5sec.	6 min	22 PCS.	0/1
2	Temperature Cycle	H : +100℃ 15min ∫ 5 min L : -40℃ 15min	300 Cycles	22 PCS.	0/1
3	Thermal Shock	H : +100℃ 5min ∫ 10 sec L : -10℃ 5min	300 Cycles	22 PCS.	0/1
4	High Temperature Storage	Temp. : 100℃	1000 Hrs.	22 PCS.	0/1
5	Low Temperature Storage	Temp. : -40℃	1000 Hrs.	22 PCS.	0/1
6	DC Operating Life	I_F = 20 mA/ 25℃	1000 Hrs.	22 PCS.	0/1
7	High Temperature / High Humidity	85℃/ 85%RH	1000 Hrs.	22 PCS.	0/1

Precautions For Use

1. Over-current-proof

Customer must apply resistors for protection, otherwise slight voltage shift will cause big current change (Burn out will happen).

2. Storage

2.1 Do not open moisture proof bag before the products are ready to use.

2.2 Before opening the package: The LEDs should be kept at 30℃ or less and 90%RH or less.

2.3 After opening the package: The LED's floor life is 1 year under 30 deg C or less and 60% RH or less. If unused LEDs remain, it should be stored in moisture proof packages.

2.4 If the moisture absorbent material (silica gel) has faded away or the LEDs have exceeded the storage time, baking treatment should be performed using the following conditions.
Baking treatment : 60±5℃ for 24 hours.

3. Soldering Condition

3.1 Pb-free solder temperature profile

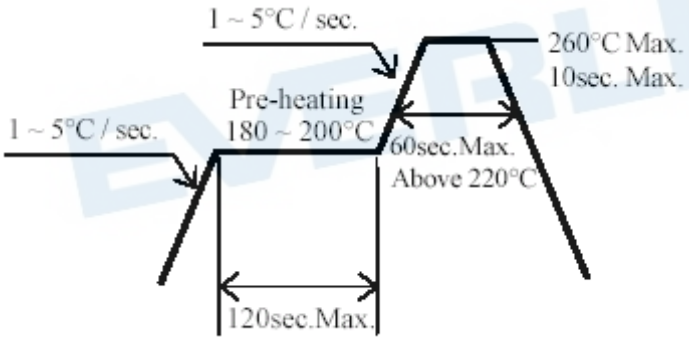

3.2 Reflow soldering should not be done more than two times.
3.3 When soldering, do not put stress on the LEDs during heating.
3.4 After soldering, do not warp the circuit board.
4.Soldering Iron

Each terminal is to go to the tip of soldering iron temperature less than 350℃ for 3 seconds within once in less than the soldering iron capacity 25W. Leave two seconds and more intervals, and do soldering of each terminal. Be careful because the damage of the product is often started at the time of the hand solder.

5.Repairing

Repair should not be done after the LEDs have been soldered. When repairing is unavoidable, a double-head soldering iron should be used (as below figure). It should be confirmed beforehand whether the characteristics of the LEDs will or will not be damaged by repairing.

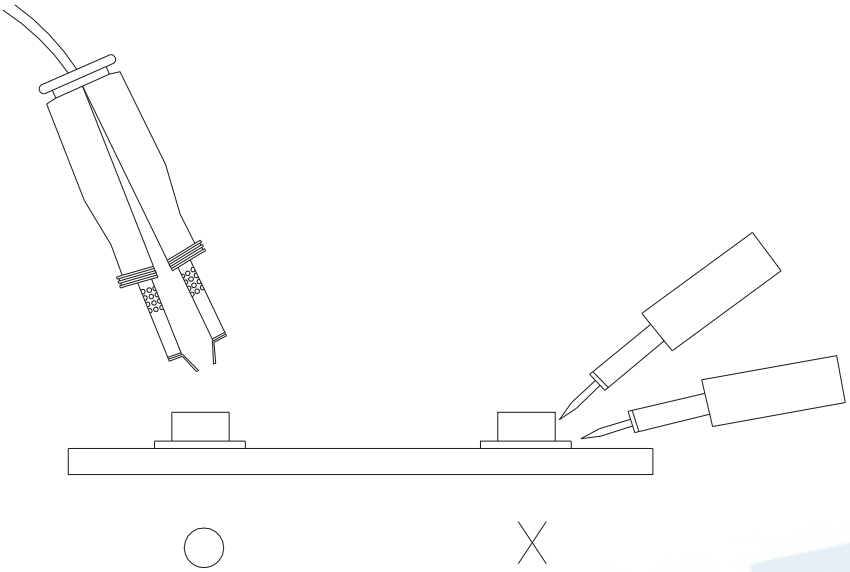

EVERLIGHT

DISCLAIMER

1. EVERLIGHT reserves the right(s) on the adjustment of product material mix for the specification.
2. The product meets EVERLIGHT published specification for a period of twelve (12) months from date of shipment.
3. The graphs shown in this datasheet are representing typical data only and do not show guaranteed values.
4. When using this product, please observe the absolute maximum ratings and the instructions for using outlined in these specification sheets. EVERLIGHT assumes no responsibility for any damage resulting from the use of the product which does not comply with the absolute maximum ratings and the instructions included in these specification sheets.
5. These specification sheets include materials protected under copyright of EVERLIGHT. Reproduction in any form is prohibited without obtaining EVERLIGHT's prior consent.
6. This product is not intended to be used for military, aircraft, automotive, medical, life sustaining or life saving applications or any other application which can result in human injury or death. Please contact authorized Everlight sales agent for special application request.

EVERLIGHT ELECTRONICS CO., LTD.
Office: No 25, Lane 76, Sec 3, Chung Yang Rd,
Tucheng, Taipei 236, Taiwan, R.O.C
Tel: 886-2-2267-2000, 2267-9936
Fax: 886-2-2267-6244, 2267-6189, 2267-6306
http://www.everlight.com