BN 237

Rod ends
with integral self-aligning ball bearing
Short type, left hand thread

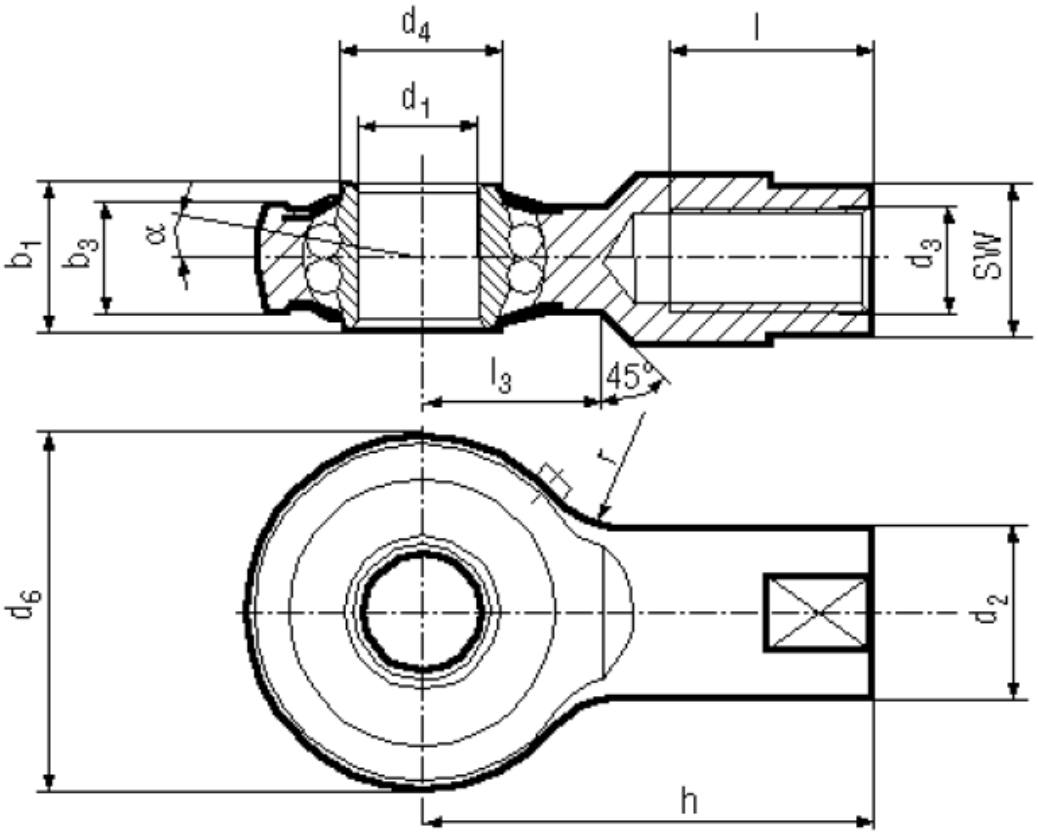

Trade mark	**Durbal**	Material	**Steel**
Type	**PF**	Surface	**zinc plated**

Article No. - 1082221	
d_1	10
d_2	15
d_3	M8
d_4	13
d_6	30
b1	13
b3	9
h	38
l	17
l_3	14,5
v	7
SW	13
n	1225