KEMET Part Number: T495B226K010ATE500

T495, Tantalum, MnO2 Tantalum, 22 uF, 10%, 10 VDC, SMD, MnO2, Molded, Low ESR, 500 mOhms, 3528, Height Max = 2.1mm

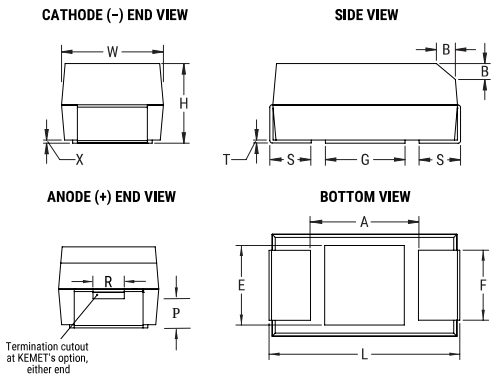

General Information	
Series:	T495
Dielectric:	MnO2 Tantalum
Style:	SMD Chip
Description:	SMD, MnO2, Molded, Low ESR
Features:	Low ESR
RoHS:	Yes
Termination:	Tin
AEC-Q200:	No
Shelf Life:	156 Weeks
MSL:	1

Dimensions	
Footprint	3528
L	3.5mm +/-0.2mm
W	2.8mm +/-0.2mm
H	1.9mm +/-0.2mm
T	0.13mm REF
S	0.8mm +0.1/-0.3mm
F	2.2mm +/-0.1mm
A	1.9mm MIN
B	0.4mm +/-0.15mm
E	2.2mm REF
G	1.8mm REF
P	0.5mm REF
R	1mm REF
X	0.1mm +/-0.1mm

Specifications	
Capacitance:	22 uF
Capacitance Tolerance:	10%
Voltage DC:	10 VDC (85C), 6.7 VDC (125C)
Temperature Range:	-55/+125°C
Rated Temperature:	85°C
Dissipation Factor:	6% 120Hz 20C
Failure Rate:	N/A
Resistance:	500 mOhms (100kHz)
Ripple Current:	412 mA (rms, 100kHz 25C), 370.8 mA (rms, 85C), 164.8 mA (rms, 125C)
Leakage Current:	2.2 uA (5min 20°C)

Packaging Specifications	
Weight:	107.45 mg
Packaging:	T&R, 178mm
Packaging Quantity:	2000

Statements of suitability for certain applications are based on our knowledge of typical operating conditions for such applications, but are not intended to constitute - and we specifically disclaim - any warranty concerning suitability for a specific customer application or use. This Information is intended for use only by customers who have the requisite experience and capability to determine the correct products for their application. Any technical advice inferred from this Information or otherwise provided by us with reference to the use of our products is given gratis, and we assume no obligation or liability for the advice given or results obtained.

© 2006 - 2020 KEMET