Copyright 2012 © Embedded Artists AB

# LPC2129 CAN QuickStart Board User's Guide

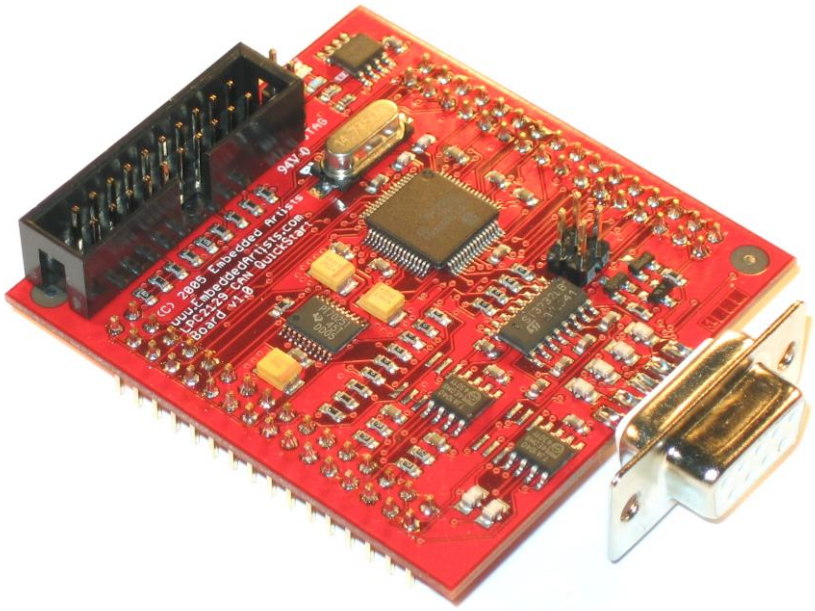

*Get Up-and-Running Quickly and Start Developing on Day 1…*

Embedded Artists

**Embedded Artists AB**
Davidshallsgatan 16
SE-211 45 Malmö
Sweden

info@EmbeddedArtists.com
http://www.EmbeddedArtists.com

**Copyright 2005-2012 © Embedded Artists AB. All rights reserved.**

No part of this publication may be reproduced, transmitted, transcribed, stored in a retrieval system, or translated into any language or computer language, in any form or by any means, electronic, mechanical, magnetic, optical, chemical, manual or otherwise, without the prior written permission of Embedded Artists AB.

### Disclaimer

Embedded Artists AB makes no representation or warranties with respect to the contents hereof and specifically disclaims any implied warranties or merchantability or fitness for any particular purpose. Information in this publication is subject to change without notice and does not represent a commitment on the part of Embedded Artists AB.

### Feedback

We appreciate any feedback you may have for improvements on this document. Please send your comments to support@EmbeddedArtists.com.

### Trademarks

All brand and product names mentioned herein are trademarks, services marks, registered trademarks, or registered service marks of their respective owners and should be treated as such.

# Table of Contents

1 Document Revision History 4

2 Introduction 5

2.1 Contents 5

2.2 Features 5

2.3 ESD Precaution 6

2.4 CE Assessment 6

2.5 Other Products from Embedded Artists 6

2.5.1 Design and Production Services 6

2.5.2 OEM / Education / QuickStart Boards and Kits 7

3 Board Design 8

3.1 Board Schematics 8

3.2 Mechanical Dimensions 9

4 Getting Started 10

4.1 Test program 10

4.2 Program Development 10

5 Further Information 11

Copyright 2012 © Embedded Artists AB

# 1 Document Revision History

| *Revision* | *Date* | *Description* |
|---|---|---|
| v1.1 rev F | 2012-01-13 | Added this revision history table. Added note about ESD precaution and CE marking. Removed schematic from document. |

Copyright 2012 © Embedded Artists AB

# 2 Introduction

Thank you for buying Embedded Artists' *LPC2129 CAN QuickStart Board* based on NXP's ARM7TDMI LPC2129 microcontroller.

This document is a User's Guide that describes the *LPC2129 CAN QuickStart Board* design along with the accompanying software and program development tools. The document contains information on how to use and integrate the board in your own designs, including electrical and mechanical information.

## 2.1 Contents

The box received when ordering the *LPC2129 CAN QuickStart Board* contains the following:

- The *LPC2129 CAN QuickStart Board*.

In addition, the following is needed in order to start developing applications with the *LPC2129 CAN QuickStart Board*:

- A DC power supply, 5 volt, capable of providing at least 150 mA (more if external circuits need power from the 3.3 volt supply). Note that the *LPC2129 CAN QuickStart Board* does not contain any reverse polarity protection. If voltage is applied with wrong polarity, the board will likely be damaged. Also note that 6.0 volt is the absolute maximum voltage that can be applied without damaging the on-board voltage regulator (TPS70251) and the CAN transceivers (TAJ104x). Consult the TPS70251 datasheet for exact details.
- A serial extension cable, DB9-male to DB9-female (DB9M-DM9F), for connecting the *LPC2129 CAN QuickStart Board* to a PC.
- An optional JTAG interface, for program development debugging.

## 2.2 Features

Embedded Artists' *LPC2129 CAN QuickStart Board* lets you get up-and-running quickly with NXP's ARM7TDMI LPC2129 microcontroller. The small form factor board offers many unique features that ease your development.

- NXP's ARM7TDMI LPC2129 microcontroller with 256 Kbyte program Flash, 16 Kbyte SRAM, and 2 CAN communication channels.
  Note that LPC2194 can possibly be mounted on the board. This version is compatible with LPC2129 but have 2 additional CAN channels on the chip.
- All LPC2129 I/O pins are available on connectors
- 12.0000 MHz crystal for maximum execution speed and standard CAN bit rates
  - Phase-locked loop (PLL) multiplies frequency with five; 5 x 12.0000 MHz = 60.0000 MHz
- Dual CAN channels with TJA1040 transceivers
- ESD/EMI protected RS232 channel with DSUB-9 connector
- 256 Kbit $I^2C$ $E^2PROM$
- Onboard low-dropout voltage and reset generation.
  - Generates +3.3V and +1.8V from a single +5V supply
  - +3.3V available for external circuits, up to 300 mA
  - Power supply: 5 VDC, at least 150 mA
- Simple and automatic program download (ISP) via RS232 channel

Copyright 2012 © Embedded Artists AB

  - Circuit that automatically controls the boot loader from RS232 channel
- Easy to connect to JTAG signals
- Dimensions: 55 x 58 mm
  - Four layer PCB (FR-4 material) for best noise immunity

## 2.3 ESD Precaution

Please note that the *LPC2129 CAN QuickStart Board* come without any case/box and all components are exposed for finger touches – and therefore extra attention must be paid to ESD (electrostatic discharge) precaution.



***Make it a habit always to first touch the ground pin on the expansion pin list for a few seconds with both hands before touching any other parts of the board.*** That way, you will have the same potential as the board and therefore minimize the risk for ESD.

***Note that Embedded Artists does not replace boards that have been damaged by ESD.***

## 2.4 CE Assessment

The *LPC2129 CAN QuickStart Board* is CE marked. See separate *CE Declaration of Conformity* document.

The *LPC2129 CAN QuickStart Board* is a class B product.

EMC emission test has been performed on the *LPC2129 CAN QuickStart Board*. General expansion connectors where internal signals are made available have been left unconnected. Connecting other devices to the product via the general expansion connectors may alter EMC emission. It is the user's responsibility to make sure EMC emission limits are not exceeded when connecting other devices to the general expansion connectors of the *LPC2129 CAN QuickStart Board*.

Due to the nature of the *LPC2129 CAN QuickStart Board* – an evaluation board not for integration into an end-product – fast transient immunity tests and conducted radio-frequency immunity tests have not been executed. Externally connected cables are assumed to be less than 3 meters. The general expansion connectors where internal signals are made available do not have any other ESD protection than from the chip themselves. Observe ESD precaution.

Note that the *LPC2129 CAN QuickStart Board* can also be considered to be a component if integrated into another product. The CE mark on the *LPC2129 CAN QuickStart Board* cannot be extended to include the new (user created) product. It is the user's responsibility to make sure EMC emission limits are not exceeded and CE mark the final product.

## 2.5 Other Products from Embedded Artists

Embedded Artists have a broad range of LPC1000/2000/3000/4000 based boards that are very low cost and developed for prototyping / development as well as for OEM applications. Modifications for OEM applications can be done easily, even for modest production volumes. Contact Embedded Artists for further information about design and production services.

### 2.5.1 Design and Production Services

Embedded Artists provide design services for custom designs, either completely new or modification to existing boards. Specific peripherals and I/O can be added easily to different designs, for example, communication interfaces, specific analog or digital I/O, and power supplies. Embedded Artists has a broad, and long, experience in designing industrial electronics in general and with NXP's LPC1000/2000/3000/4000 microcontroller families in specific. Our competence also includes wireless and wired communication for embedded systems. For example IEEE802.11b/g (WLAN), Bluetooth™, ZigBee™, ISM RF, Ethernet, CAN, RS485, and Fieldbuses.

Copyright 2012 © Embedded Artists AB

### 2.5.2 OEM / Education / QuickStart Boards and Kits

Visit Embedded Artists' home page, www.EmbeddedArtists.com, for information about other *OEM* / *Education* / *QuickStart* boards / kits or contact your local distributor.

Copyright 2012 © Embedded Artists AB

# 3 Board Design

This chapter contains detailed information about the electrical and mechanical design of the *LPC2129 CAN QuickStart Board*. The schematic can be downloaded in pdf format from the support page, and is recommended to have printed out while reading this chapter. A number of example circuits are also presented that will lower the threshold of start developing with the board.

## 3.1 Board Schematics

Besides the LPC2129 microcontroller from NXP, the board contains dual CAN transceivers, a dual voltage regulator with an internal reset generator, a 256 Kbit I²C E²PROM, and an ESD/EMI protected RS232 serial channel. A red LED is connected to the reset signal and lights when reset is active, i.e., the signal is low.

The microcontroller crystal frequency is 12.0000 MHz. This frequency has been selected in order to allow close to maximum execution speed (5 x 12.0000 MHz = 60.0000 MHz, which is the maximum frequency) as well as to provide standard CAN communication bit rates. The crystal frequency can be changed to any desired value for OEM orders, provided that the conditions in the LPC2129 datasheet are met. Current requirements are (but consult the most current datasheet for latest details):

- 1-30 MHz if the on-chip phase-locked loop (PLL) is not used, or
- 10-25 MHz if the PLL is to be used.

The design has direct and automatic support for program downloading (via ISP) over the RS232 serial channel. The RS232 signal DTR controls the reset signal to the LPC2129 microcontroller. The RS232 signal RTS is connected to pin P0.14 in the LPC2129 microcontroller. This pin is sampled after reset and determines if the internal bootloader program shall be started, or not. A low signal after reset enters the bootloader mode. Both the RS232 receive and transmit signals as well as the RTS/DTR signals can be disconnected from the microcontroller via four links / jumpers on the board. See *Figure 1* below for details.

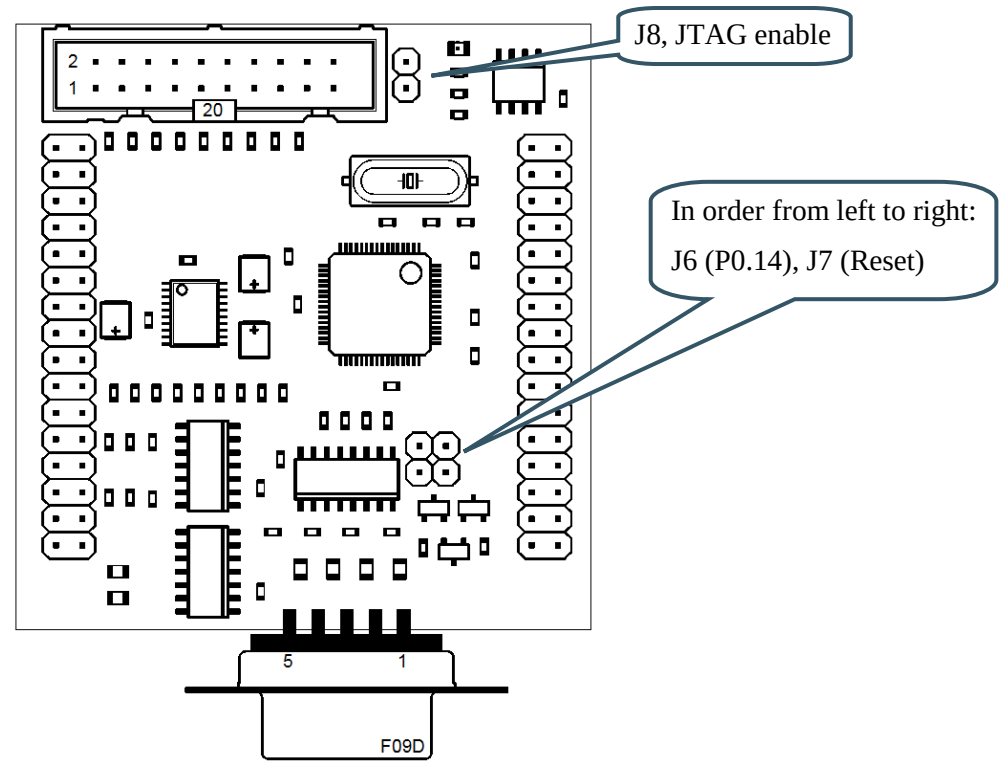


Figure 1 - LPC2129 CAN QuickStart Board Jumpers

Copyright 2012 © Embedded Artists AB

## 3.2 Mechanical Dimensions

The board interface connectors are placed in two 2x16 pin rows along the board edges. They are 1800 mil apart (measured from outer edges). Figure 2 below contains a drawing of the board that includes mechanical measures.

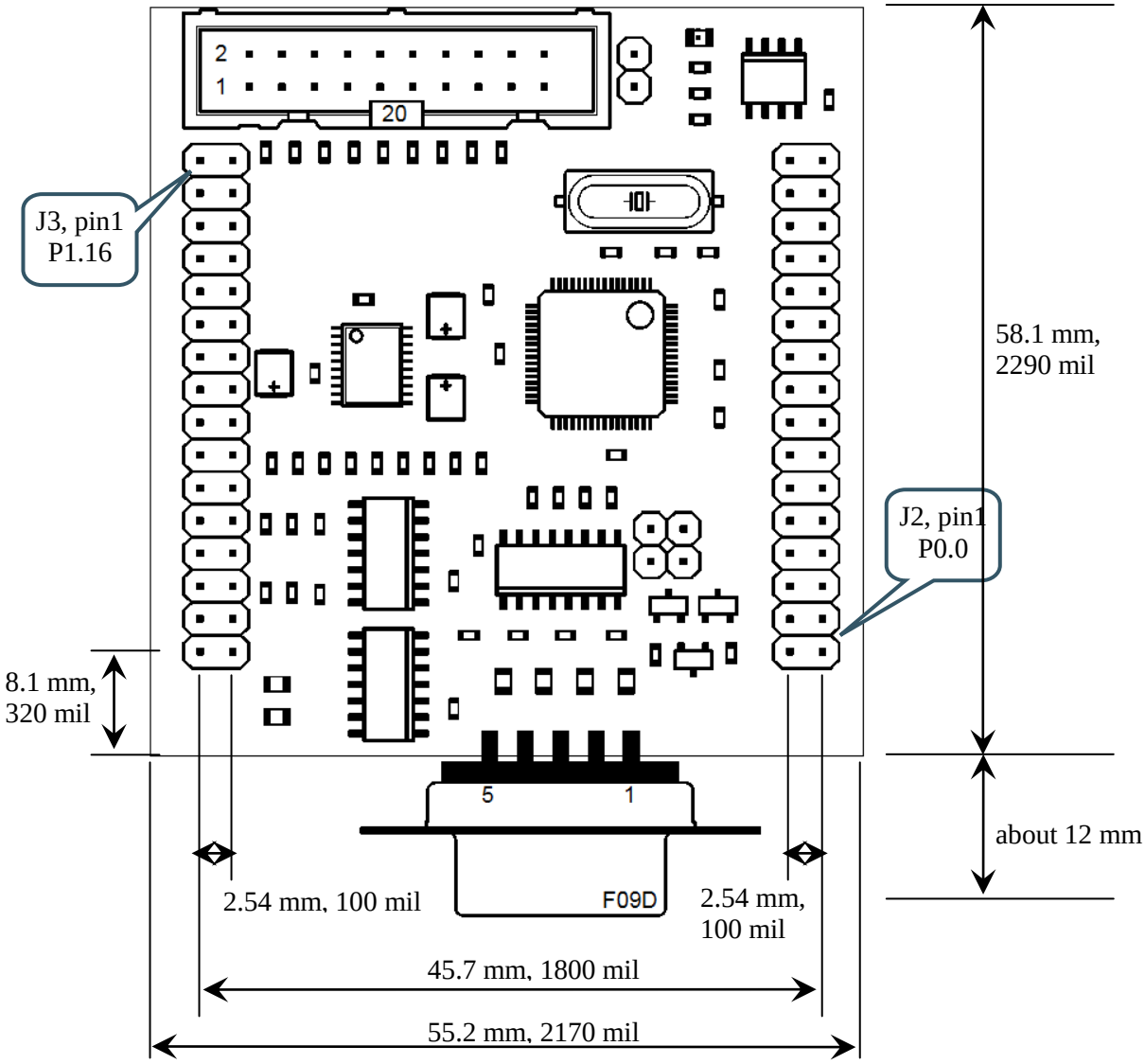


Figure 2 - LPC2129 CAN QuickStart Board Mechanical Dimensions

Copyright 2012 © Embedded Artists AB

# 4 Getting Started

## 4.1 Test program

The *LPC2129 CAN QuickStart Board* comes preloaded with a test program. This program can be used to verify that the board operates correctly.

The test program outputs a running-one to port pins P0.4 – P0.31, meaning that one LED at a time will light (in a running-one pattern). Pins P0.0 – P0.1 are tested via the serial channel and pins P0.2 – P0.3 are tested via the I²C bus. The two CAN channels can be connected together to test the CAN channels. Also, a terminal program should be attached to the RS232 DSUB-9 connector. The test program will output test information regarding the I²C E²PROM test, and CAN test. Also, the UART/RS232 channel can be tested by typing characters in the terminal program.

The settings for the terminal program are: 38.4 kbps, 8 data bits, no parity bits, and one stop bit (i.e., 8N1).

The output from the test program will look something like in *Figure 3* below.

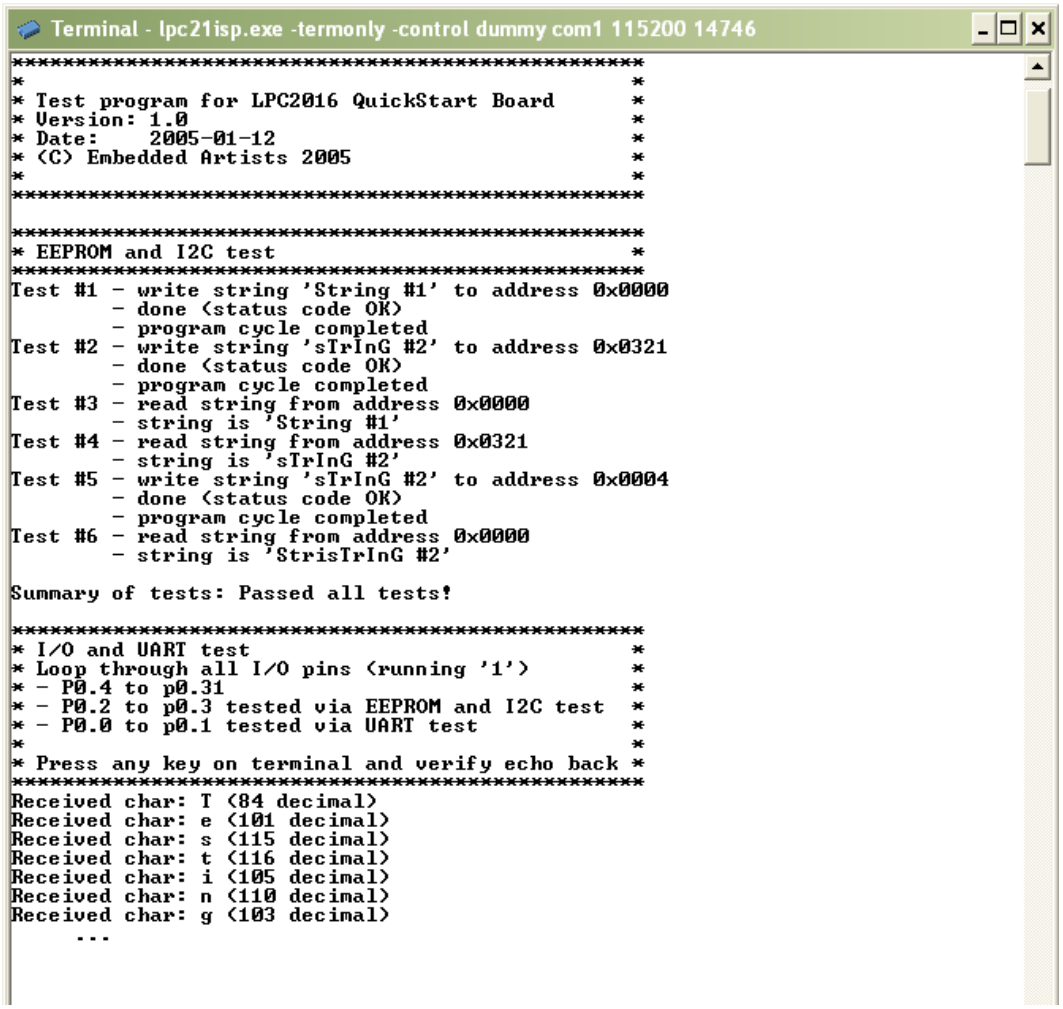


Figure 3 – Example Test Program Output

## 4.2 Program Development

Consult the *QuickStart Program Development User's Manual* for more information about the *QuickStart Build Environment* from Embedded Artists, and program development for the ARM7 in general.

Copyright 2012 © Embedded Artists AB

# 5 Further Information

The LPC2129 microcontroller is a complex circuit and there exist a number of other documents with a lot more information. The following documents are recommended as a complement to this document.

[1] NXP LPC2129 Datasheet
http://ics.nxp.com/products/lpc2000/pdf/lpc2119.lpc2129.pdf

[2] NXP LPC2129 User's Manual
http://ics.nxp.com/support/documents/microcontrollers/pdf/user.manual.lpc2119.lpc2129.lpc2194.lpc2292.lpc2294.pdf

[3] NXP LPC2129 Errata Sheet
http://ics.nxp.com/support/documents/microcontrollers/pdf/errata.lpc2129.pdf

[4] ARM7TDMI Technical Reference Manual. Document identity: DDI0029G
http://www.arm.com/pdfs/DDI0029G_7TDMI_R3_trm.pdf

[5] ARM Architecture Reference Manual. Document identity: DDI0100E
Book, Second Edition, edited by David Seal, Addison-Wesley: ISBN 0-201-73719-1
Also available in PDF form on the ARM Technical Publications CD

[6] ARM System Developer's Guide – Designing and Optimizing System Software, by A.N. Sloss, D Symes, C. Wright. Elsevier: ISBN 1-55860-874-5

[7] Embedded System Design on a Shoestring, by Lewin Edwards.
Newnes: ISBN 0750676094.

[8] GNU Manuals
http://www.gnu.org/manual/

[9] GNU ARM tool chain for Cygwin
http://www.gnuarm.com

[10] An Introduction to the GNU Compiler and Linker, by Bill Gatliff
http://www.billgatliff.com

[11] LPC2000 Yahoo Group. A discussion forum dedicated entirely to the NXP's LPC2xxx series of microcontrollers.
http://groups.yahoo.com/group/lpc2000/

[12] The Insider's Guide to the NXP's ARM7-Based Microcontrollers, by Trevor Martin.
http://www.hitex.co.uk/arm/lpc2000book/index.html

Also note that there can be newer versions of the documents than the ones linked to here. Always check for the latest information / version.

Copyright 2012 © Embedded Artists AB