KEMET Part Number: ALF20G223EH063

ALF20, Aluminum Electrolytic, 22,000 uF, 20%, 63 VDC, -40/+85°C

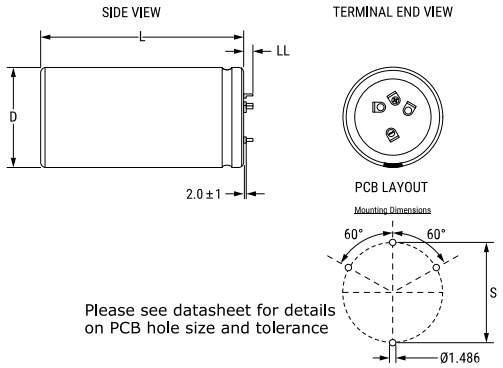

General Information	
Series:	ALF20
Dielectric:	Aluminum Electrolytic
Style:	Press-Fit
Description:	Press-Fit,Aluminum Electrolytic
RoHS:	Yes
Lead:	5 Pin Press-Fit
AEC-Q200:	No
Notes:	Dimensions Include Sleeving.
Shelf Life:	156 Weeks

Dimensions	
D	40mm +1mm
L	60mm +/-2mm
S	22.5mm +/-0.1mm
LL	5.5mm +/-1mm
F	1.486mm +/-0.076mm

Specifications	
Capacitance:	22,000 uF
Capacitance Tolerance:	20%
Voltage DC:	63 VDC, 72.5 VDC (Surge)
Temperature Range:	-40/+85°C
Rated Temperature:	85°C
Life:	18000 Hrs (Rated Voltage And Ripple Current At 85C), 29000 Hrs (Rated Voltage at 85C)
Resistance:	26 mOhms (100Hz 20C), 22 mOhms (10kHz 20C)
Ripple Current:	9.84 Amps (100Hz 85C), 11.34 Amps (10kHz 85C)
Leakage Current:	8316 uA (5min 20°C)

Packaging Specifications	
Weight:	98 g
Packaging:	Bulk
Packaging Quantity:	36

Statements of suitability for certain applications are based on our knowledge of typical operating conditions for such applications, but are not intended to constitute - and we specifically disclaim - any warranty concerning suitability for a specific customer application or use. This Information is intended for use only by customers who have the requisite experience and capability to determine the correct products for their application. Any technical advice inferred from this Information or otherwise provided by us with reference to the use of our products is given gratis, and we assume no obligation or liability for the advice given or results obtained.

© 2006 - 2019 KEMET