DATE	DESCRIPTION	REV.

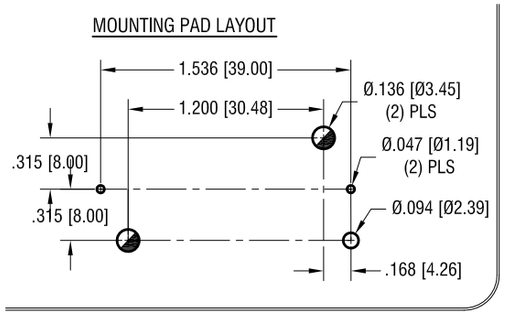

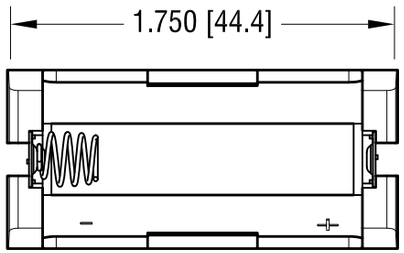

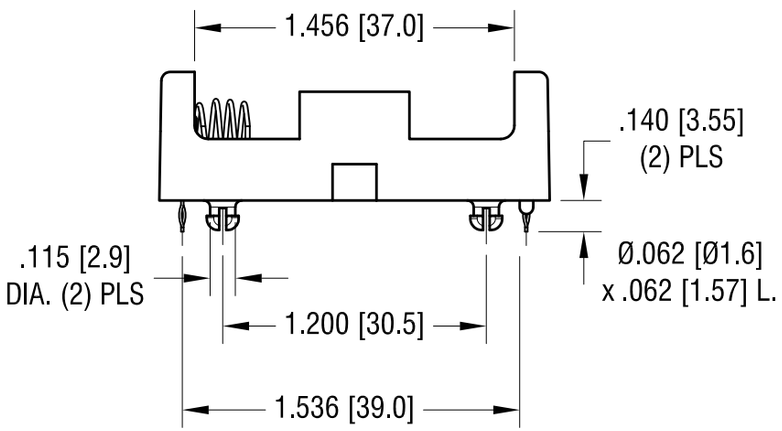

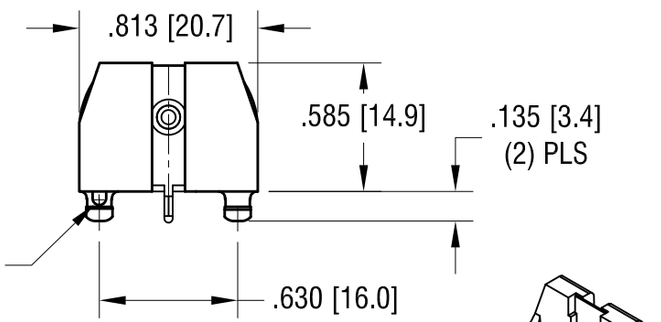

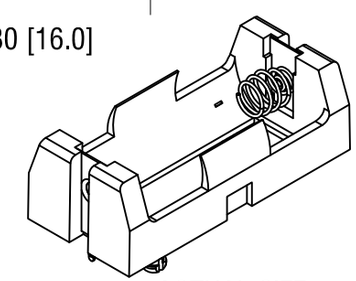

ACTUAL SIZE

NOTE:

1. BASE:
   MAT'L: HEAT RESISTANCE NYLON
   STANYL 46 OR EQUIVALENT
2. CONTACT:
   MAT'L: .012 THK STAINLESS STEEL
   FINISH: TIN NICKEL PLATE.
3. SPRING: .020 DIA. MUSIC WIRE, NICKEL PLATE
   SPRING EYELETED TO BASE

THIS DOCUMENT IS THE PROPERTY OF KEYSTONE ELECTRONICS CORP. AND SHALL NOT BE REPRODUCED, DISTRIBUTED OR USED AS A BASIS FOR MANUFACTURE WITHOUT PRIOR WRITTEN PERMISSION FROM KEYSTONE ELECTRONICS CORP.

KEYSTONE ELECTRONICS CORP.
www.keyelco.com • NEW HYDE PARK, NY 11040 • Tel (516) 328-7500

PART NAME	THM BATTERY HOLDER, 18350		
MATERIAL	AS NOTED		
FINISH	AS NOTED	DRN BY NT	DATE 7.08.19
		APP'D RH	SCALE 1.25X
TOLERANCES INCH [MM] DECIMAL ± .010 [± 0.25] ANGULAR ± 1° UNLESS OTHERWISE SPECIFIED	CODE C	DWG NO. 1111	