ADAM-6260
6-ch Relay Output Modbus TCP Module
ADAM-6266
4-ch Relay Output Modbus TCP Module with 4-ch DI

STARTUP MANUAL

Overview

Thank you for purchasing this ADAM-6200 series module.This is a quick guide to help you deploy the ADAM-6200 series module in your application field. It will include power and application wiring. If you need a more complicated or specific installation, you could try to contact ADVANTECH for advanced technical support or suggestions.

Input Power Requirements

The ADAM-6200 system is designed for a standard industrial unregulated 24 V_{DC} power supply. For further applications, it can also accept +10 to +30 V_{DC} of power input, 200mV peak to peak of power ripple, and the immediate ripple voltage should be maintained between +10 and +30 V_{DC}.

Switch Settings

It mainly presents the switch configuration for Dry Contact and Wet Contact wiring in Digital Input interface.

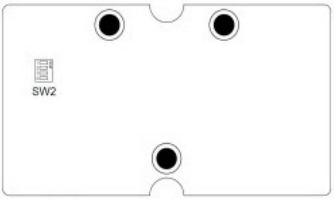

Switch	SW2			
Position	1	2	3	4
DI Channel	Ch0	Ch1	Ch2	Ch3
ON	Dry Contact (Default)			
OFF	Wet Contact			

Notes

For more information on this and other Advantech products, please visit our websites at:

http://www.advantech.com

http://www.advantech.com/eAutomation

For technical support and service:

http://www.advantech.com.tw/eservice

This startup manual is for the ADAM-6260/6266

Part No: 2003626600	1st Edition
	February 2013

Application Wiring

Isolated Digital Input

Dry Contact

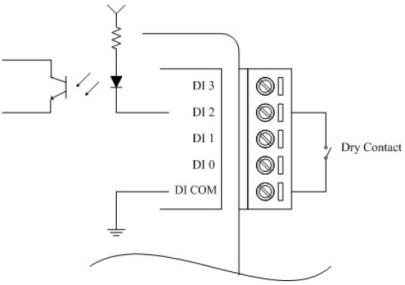

Wet Contact

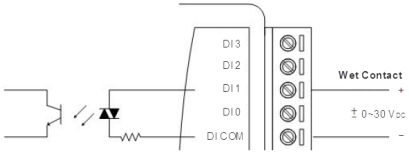

Isolated Relay Output

Contact Rating: 250 V_{AC} @ 5A, 85°C

30 V_{DC} @ 5A, 85°C

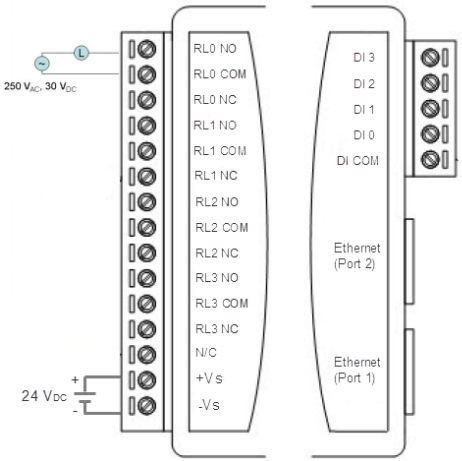

ADVANTECH

Daisy Chain Limitations

Here are the limitations of daisy chain connection with auto-bypass protection enabled.

Read the following statement carefully before installation.

In general, the maximum cabling distance of each 100BASE-TX network segment is 100 meter. Based on this limitation, the maximum total connection length in daisy chain wiring should also be 100m as if auto-bypass protection active. See the following figure as example, the distance from first to second module is 50m, so as second to third. When the power fails on second (middle) module, the auto-bypass will activate to bridge the network connection. The total distance from first to the 3rd will become 100m, that means the total network segment is close to limitation.

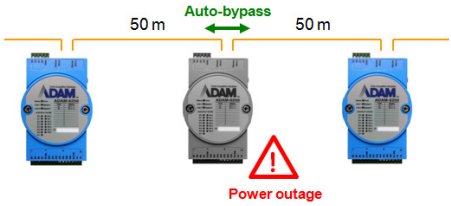

Furthermore, for the reason of signal transmission characteristics, the continuous auto-bypass node should be less than 2, so that the network communication in daisy chain wiring is workable.

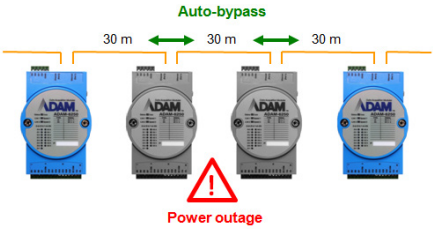

The purpose of the auto-bypass protection is to help user minimize the damage situation of module power outage. Note that when a power outage occurs on ADAM-6200 modules, there exists around 2.5 seconds buffer time for internally switching to auto-pass circuit.That means Ethernet packets can't reach the other devices by daisy-chaining after this power-down module in around 2.5 seconds.The valid connection duration after the auto-bypass function is enabled is at most around 4 days, otherwise, the Ethernet communication will be interrupted until power is restored.