DATASHEET

SMD ▪ B
12-21SYGC/S530-E4/TR8

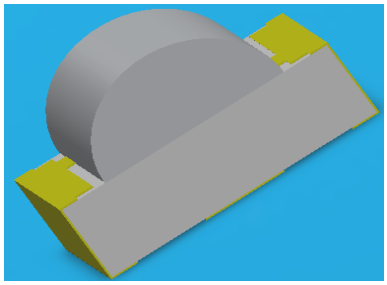

Features

- Package in 8mm tape on 7″ diameter reel.
- Compatible with automatic placement equipment.
- Compatible with infrared and vapor phase reflow solder process.
- Mono-color type.
- Pb-free.
- The product itself will remain within RoHS compliant version.
- Compliance with EU REACH.
- Compliance Halogen Free .(Br <900 ppm ,Cl <900 ppm , Br+Cl < 1500 ppm)

Description

- The 12-21 SMD LED is much smaller than lead frame type components, thus enable smaller board size, higher packing density, reduced storage space and finally smaller equipment to be obtained.
- Besides, lightweight makes them ideal for miniature applications. etc.

Applications

- Backlighting in dashboard and switch.
- Telecommunication: indicator and backlighting in telephone and fax.
- Flat backlight for LCD, switch and symbol.
- General use.

Copyright © 2010, Everlight All Rights Reserved. Release Date : 03-Feb-2025 Issue No: DSE-0016798 Rev.4 www.everlight.com
Ver.:4 Release Date:02/13/2025 狀態:Approved(正式發行)

Device Selection Guide

Chip Materials	Emitted Color	Resin Color
AlGaInP	Brilliant Yellow Green	Water Clear

Absolute Maximum Ratings (Ta=25℃)

Parameter	Symbol	Rating	Unit
Reverse Voltage	V_R	5	V
Forward Current	I_F	25	mA
Peak Forward Current (Duty 1/10 @1KHz)	I_{FP}	60	mA
Power Dissipation	Pd	60	mW
Electrostatic Discharge	ESD_{HBM}	2000	V
Operating Temperature	T_{opr}	-40 ~ +85	℃
Storage Temperature	Tstg	-40 ~ +90	℃
Soldering Temperature	Tsol	Reflow Soldering : 260 ℃ for 10 sec. Hand Soldering : 350 ℃ for 3 sec.	

Copyright © 2010, Everlight All Rights Reserved. Release Date : 03-Feb-2025 Issue No: DSE-0016798 Rev.4 www.everlight.com
Ver.:4 Release Date:02/13/2025 狀態:Approved(正式發行)

Electro-Optical Characteristics (Ta=25℃)

Parameter	Symbol	Min.	Typ.	Max.	Unit	Condition
Luminous Intensity	Iv	35	41	-----	mcd	I_F=20mA
Viewing Angle	$2\theta_{1/2}$	-----	120	-----	deg	
Peak Wavelength	λp	-----	575	-----	nm	
Dominant Wavelength	λd	-----	573	-----	nm	
Spectrum Radiation Bandwidth	△λ	-----	20	-----	nm	
Forward Voltage	V_F	1.7	2.0	2.4	V	
Reverse Current	I_R	-----	-----	10	μA	V_R=5V

Note:
1. RA test @ 5mA
2. Reverse voltage condition is test only. Do not reverse operation.

Copyright © 2010, Everlight All Rights Reserved. Release Date : 03-Feb-2025 Issue No: DSE-0016798 Rev.4 www.everlight.com
Ver.:4 Release Date:02/13/2025 狀態:Approved(正式發行)

Typical Electro-Optical Characteristics Curves

Spectrum Distribution

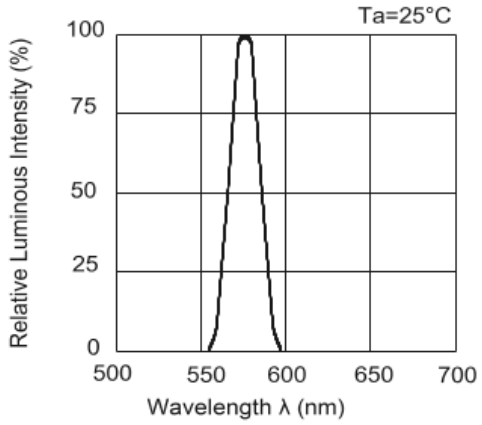

Forward Current vs. Forward Voltage

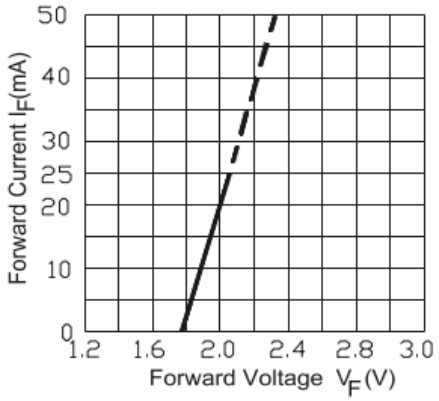

Relative Luminous Intensity vs. Ambient Temperature

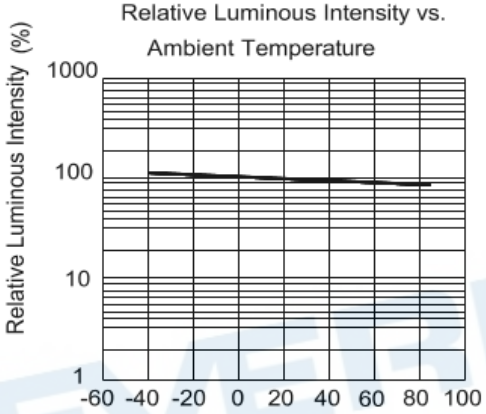

Relative Luminous Intensity vs Forward Current

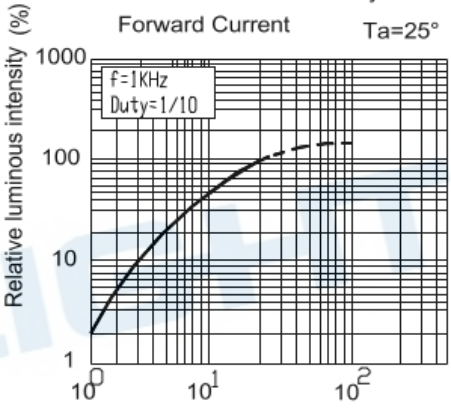

Forward Current Derating Curve

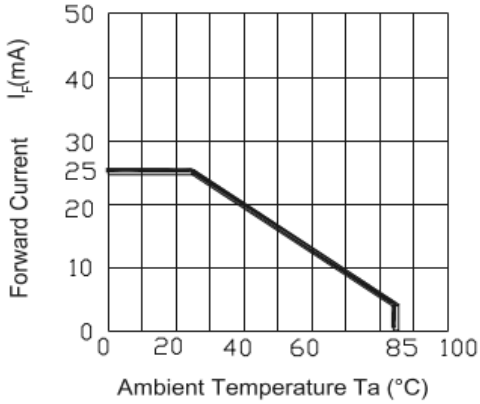

Radiation Diagram Ta=25°

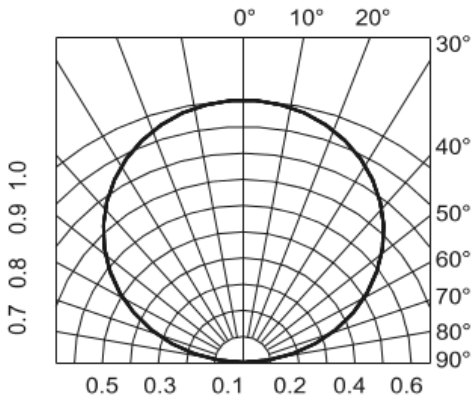

Copyright © 2010, Everlight All Rights Reserved. Release Date : 03-Feb-2025 Issue No: DSE-0016798 Rev.4 www.everlight.com
Ver.:4 Release Date:02/13/2025 狀態:Approved(正式發行)

Package Dimension

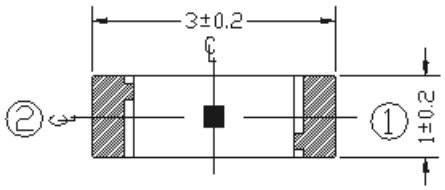

Top

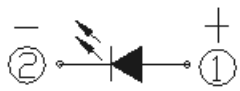

Polarity

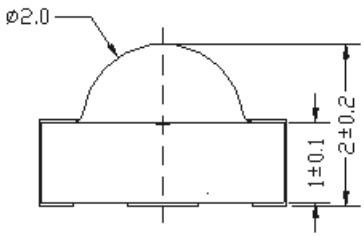

Sied

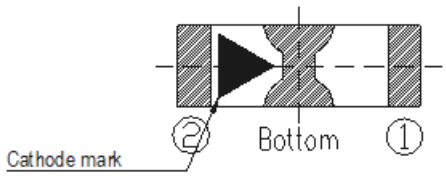

Recommend Soldering Pad

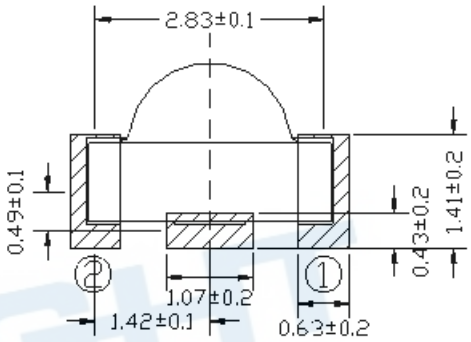

Suggested pad dimension is just for reference only.
Please modify the pad dimension based on individual need.

Note: Tolerances unless mentioned ±0.1mm. Unit = mm

Copyright © 2010, Everlight All Rights Reserved. Release Date : 03-Feb-2025 Issue No: DSE-0016798 Rev.4 www.everlight.com
Ver.:4 Release Date:02/13/2025 狀態:Approved(正式發行)

Moisture Resistant Packing Materials
Label Explanation

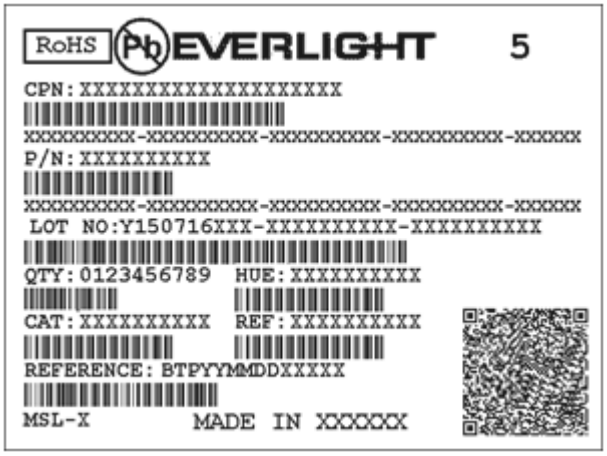

- CPN: Customer's Product Number
- P/N: Product Number
- QTY: Packing Quantity
- CAT: Luminous Intensity Rank
- HUE: Chromaticity Coordinates & Dom. Wavelength Rank
- REF: Forward Voltage Rank
- LOT No: Lot Number

Reel Dimensions

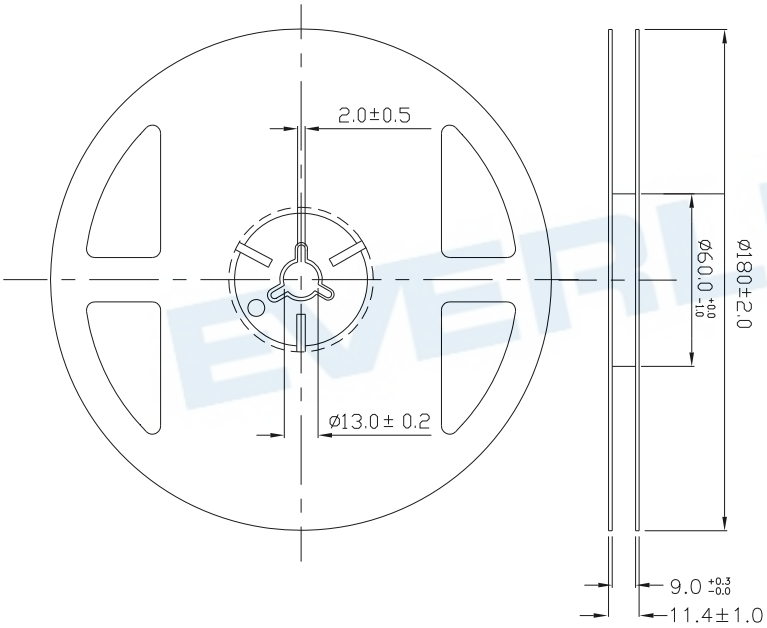

Note: The tolerances unless mentioned is ±0.1mm ,Unit = mm

Copyright © 2010, Everlight All Rights Reserved. Release Date : 03-Feb-2025 Issue No: DSE-0016798 Rev.4 www.everlight.com
Ver.:4 Release Date:02/13/2025 狀態:Approved(正式發行)

Carrier Tape Dimensions: Loaded quantity 2000 PCS per reel

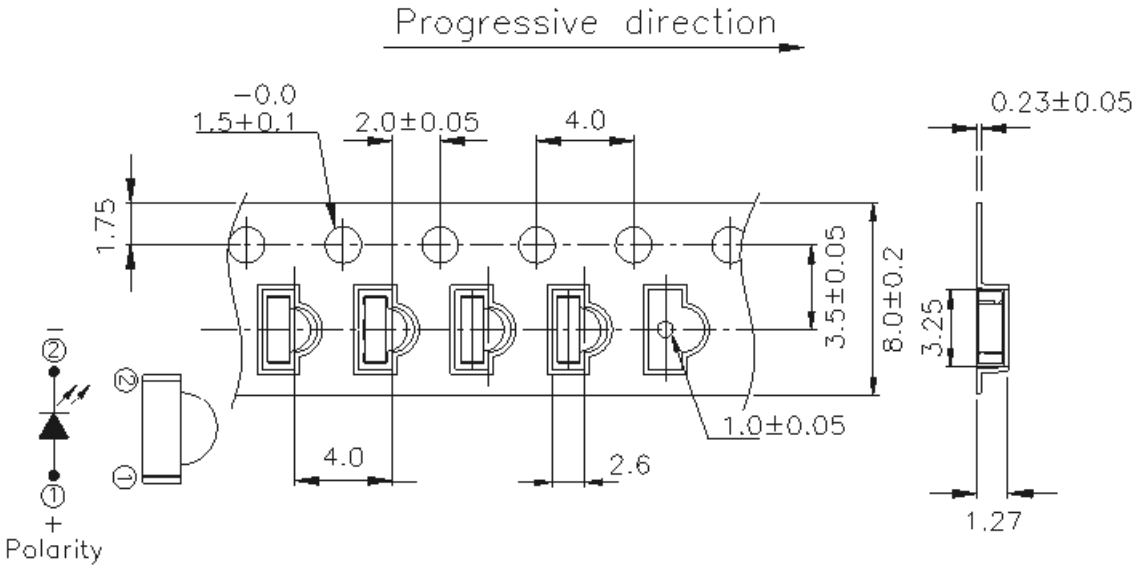

Note: The tolerances unless mentioned is ±0.1mm ,Unit = mm

Moisture Resistant Packaging

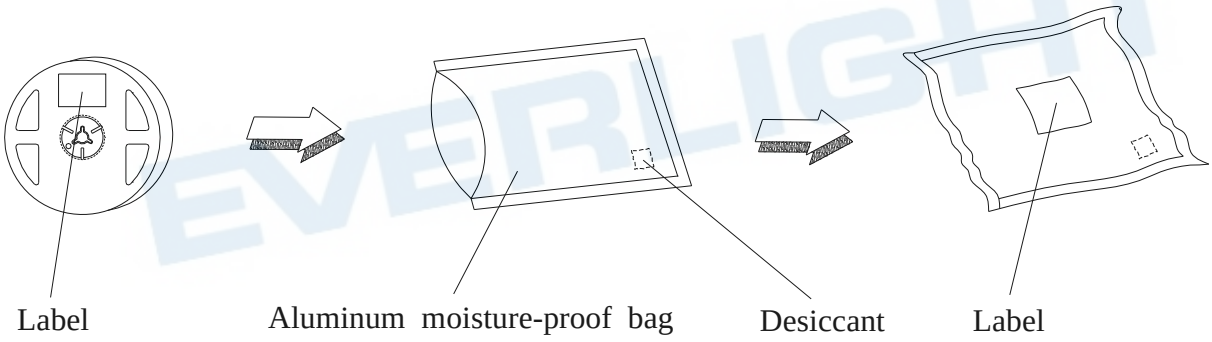

Copyright © 2010, Everlight All Rights Reserved. Release Date : 03-Feb-2025 Issue No: DSE-0016798 Rev.4 www.everlight.com
Ver.:4 Release Date:02/13/2025 狀態:Approved(正式發行)

Precautions For Use

1. Over-current-proof
   Customer must apply resistors for protection, otherwise slight voltage shift will cause big current change (Burn out will happen).

2. Storage
   2.1 Do not open moisture proof bag before the products are ready to use.
   2.2 After opening the package: The LEDs should be kept at 30℃ or less and 60%RH or less.
   2.3 The LEDs should be used within 168 hours (7days) after opening the package.
   If unused LEDs remain, it should be stored in moisture proof packages.
   2.4 If the moisture absorbent material (silica gel) has faded away or the LEDs have exceeded the storage time, baking treatment should be performed using the following conditions.
   Baking treatment : 60±5℃ for 24 hours.

3. Soldering Condition
   3.1 Pb-free solder temperature profile

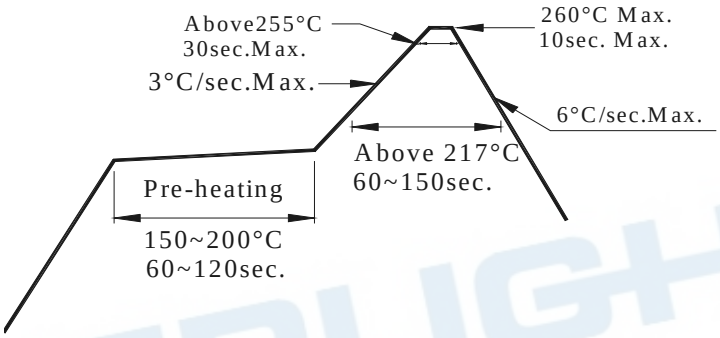

   3.2 Reflow soldering should not be done more than two times.
   3.3 When soldering, do not put stress on the LEDs during heating.
   3.4 After soldering, do not warp the circuit board.

4. Soldering Iron
   Each terminal is to go to the tip of soldering iron temperature less than 350℃ for 3 seconds within once in less than the soldering iron capacity 25W. Leave two seconds and more intervals, and do soldering of each terminal. Be careful because the damage of the product is often started at the time of the hand solder.

5. Repairing
   Repair should not be done after the LEDs have been soldered. When repairing is unavoidable, a double-head soldering iron should be used (as below figure). It should be confirmed beforehand whether the characteristics of the LEDs will or will not be damaged by repairing.

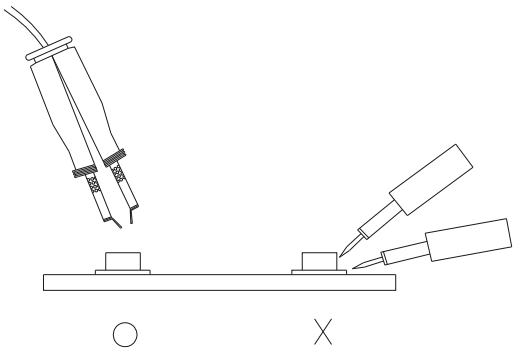

Copyright © 2010, Everlight All Rights Reserved. Release Date : 03-Feb-2025 Issue No: DSE-0016798 Rev.4 www.everlight.com
Ver.:4 Release Date:02/13/2025 狀態:Approved(正式發行)

Application Restrictions

High reliability applications such as military/aerospace, automotive safety/security systems, and medical equipment may require different product. If you have any concerns, please contact Everlight before using this product in your application. This specification guarantees the quality and performance of the product as an individual component. Do not use this product beyond the specification described in this document.

DISCLAIMER

1. EVERLIGHT reserves the right(s) on the adjustment of product material mix for the specification.
2. The product meets EVERLIGHT published specification for a period of twelve (12) months from date of shipment.
3. The graphs shown in this datasheet are representing typical data only and do not show guaranteed values.
4. When using this product, please observe the absolute maximum ratings and the instructions for using outlined in these specification sheets. EVERLIGHT assumes no responsibility for any damage resulting from the use of the product which does not comply with the absolute maximum ratings and the instructions included in these specification sheets.
5. These specification sheets include materials protected under copyright of EVERLIGHT. Reproduction in any form is prohibited without obtaining EVERLIGHT's prior consent.
6. This product is not intended to be used for military, aircraft, automotive, medical, life sustaining or life saving applications or any other application which can result in human injury or death. Please contact authorized EVERLIGHT sales agent for special application request.

Copyright © 2010, Everlight All Rights Reserved. Release Date : 03-Feb-2025 Issue No: DSE-0016798 Rev.4 www.everlight.com
Ver.:4 Release Date:02/13/2025 狀態:Approved(正式發行)