Technical Data Sheet

Top Views LEDs

67-22/R6GAC-B19/2T



Features

- P-LCC-4 package.
- White package.
- Optical indicator.
- Colorless clear window.
- Ideal for backlight and light pipe application.
- Inter reflector.
- Wide viewing angle.
- Suitable for vapor-phase reflow.
- Computable with automatic placement equipment.
- Available on tape and reel (8mm Tape).
- Pb-free.
- The product itself will remain within RoHS compliant version

Descriptions

- The 67-22 series is available in soft orange, green,blue and yellow. Due to the package design, the LED has wide viewing angle and optimized light coupling by inter reflector. This feature makes ideal for light pipe application. The low current requirement makes this device ideal for portable equipment or any other application where power is at a premium.

Applications

- Telecommunication: indicator and backlighting in telephone and fax.
- Flat backlight for LCD's, switches and symbols.
- Light pipe application.
- General use.

Device Selection Guide

Chip		Emitted Color	Resin Color
Type	Material		
R6	AlGaInP	Brilliant Red	Water Clear
GA	InGaN	Brilliant Green	

Ver.:2 Release Date:10/26/2010 狀態:Approved(正式發行)

Technical Data Sheet

Top Views LEDs

67-22/R6GAC-B19/2T

Package Dimensions

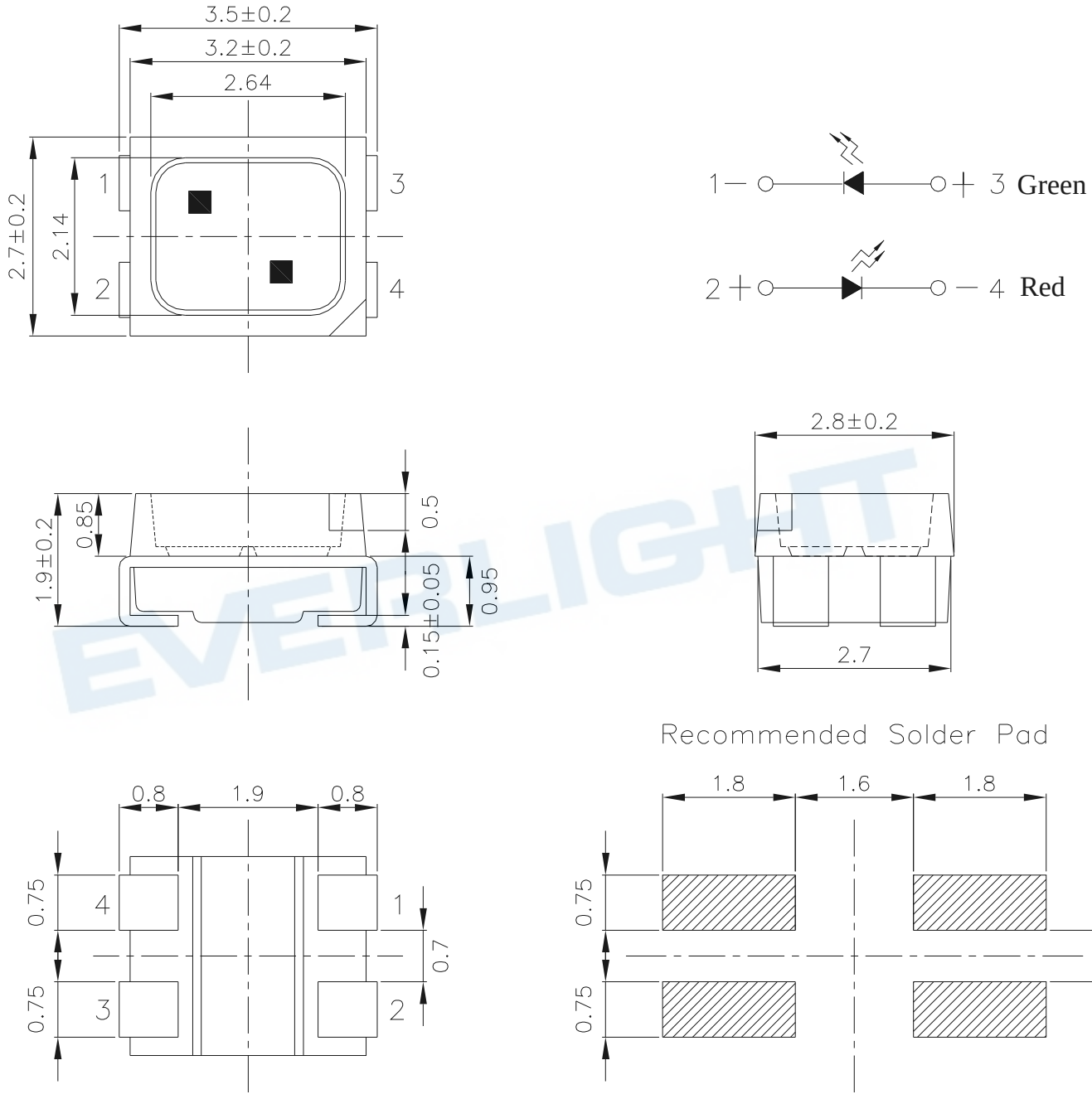

Notes: The tolerances unless mentioned is ±0.1mm ,all dimensions are in millimeters.

Ver.:2 Release Date:10/26/2010 狀態:Approved(正式發行)

Technical Data Sheet

Top Views LEDs

67-22/R6GAC-B19/2T

Absolute Maximum Ratings (Ta=25℃)

Parameter	Symbol		Rating	Unit
Reverse Voltage	V_R		5	V
Forward Current	I_F	R6	25	mA
		GA	25	
Peak Forward Current(Duty 1/10 @ 1KHz)	I_{FP}	R6	60	mA
		GA	100	
Power Dissipation	Pd	R6	60	mW
		GA	110	
Electrostatic Discharge(HBM)	ESD	R6	2000	V
		GA	150	
Operating Temperature	Topr		-40 ~ +85	℃
Storage Temperature	Tstg		-40~ +95	℃
Soldering Temperature	Tsol		Reflow Soldering : 260 ℃ for 10 sec Hand Soldering : 350 ℃ for 3 sec.	

Notes:

1.Tolerance of Luminous Intensity ±11%

2.Tolerance of Dominant Wavelength ±1.0nm

Ver.:2 Release Date:10/26/2010 狀態:Approved(正式發行)

Technical Data Sheet

Top Views LEDs

67-22/R6GAC-B19/2T

Electro-Optical Characteristics (Ta=25℃)

Parameter	Symbol		Min.	Typ.	Max.	Unit	Condition
Luminous Intensity	I_V	R6	70	220	-----	mcd	I_F=20mA
		GA	250	565	-----		
Viewing Angle	2θ 1/2		-----	120	-----	deg	
Peak Wavelength	λ p	R6	-----	632	-----	nm	
		GA	-----	518	-----		
Dominant Wavelength	λ d	R6	-----	624	-----	nm	
		GA	-----	525	-----		
Spectrum Radiation Bandwidth	$\triangle\lambda$	R6	-----	20	-----	nm	
		GA	-----	35	-----		
Forward Voltage	V_F	R6	1.75	-----	2.35	V	
		GA	2.75	-----	3.65		
Reverse Current	I_R	R6	-----	-----	10	μA	V_R=5V
		GA	-----	-----	50		

Notes:

1.Tolerance of Luminous Intensity ±11%

2.Tolerance of Dominant Wavelength ±1.0nm

Ver.:2 Release Date:10/26/2010 狀態:Approved(正式發行)

Typical Electro-Optical Characteristics Curves(R6)

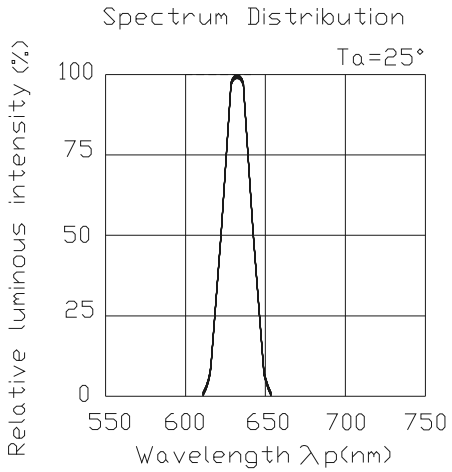

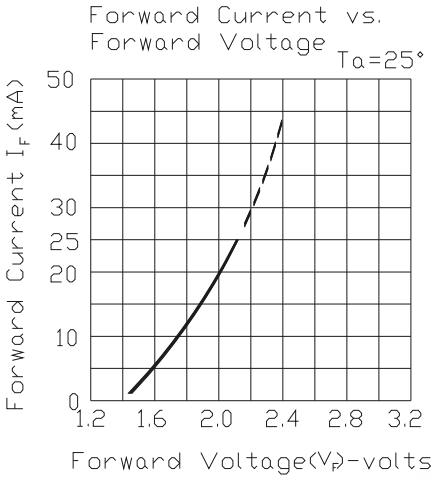

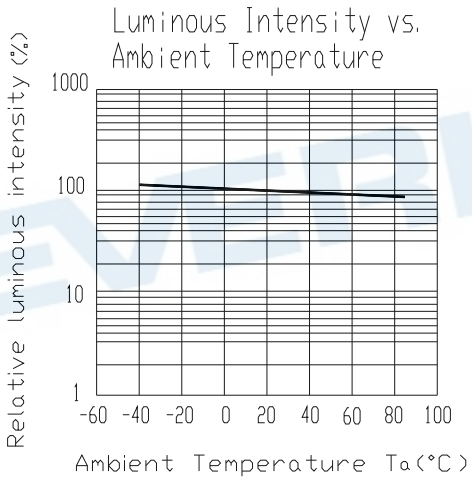

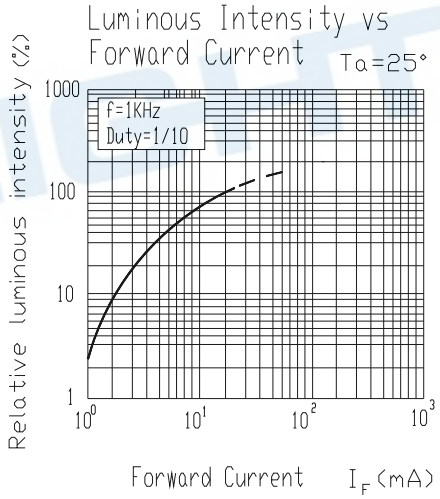

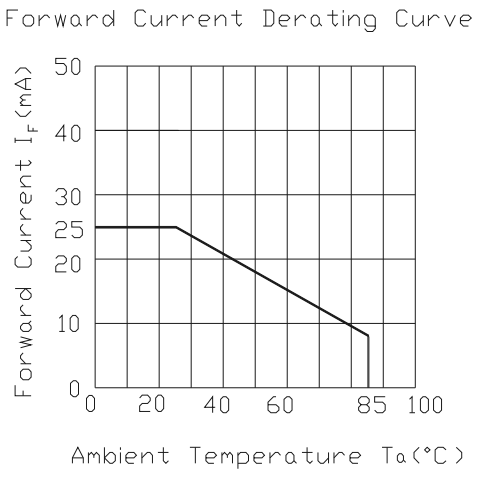

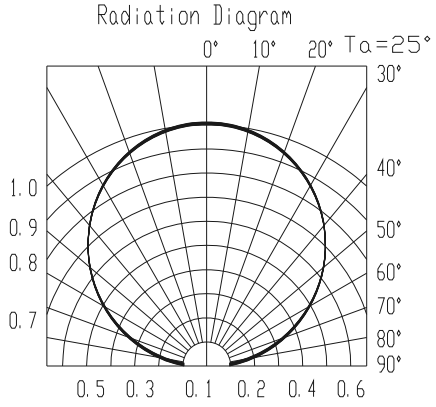

Typical Electro-Optical Characteristics Curves(GA)

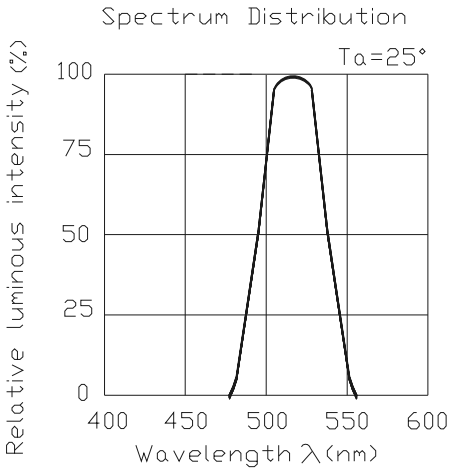

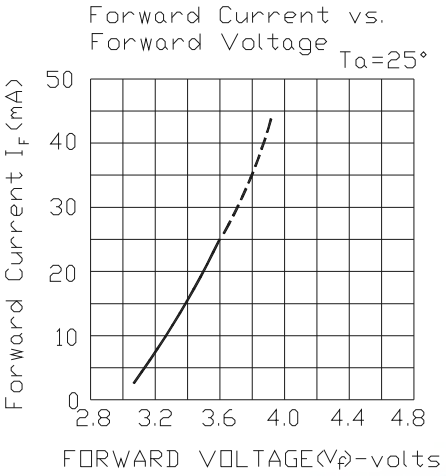

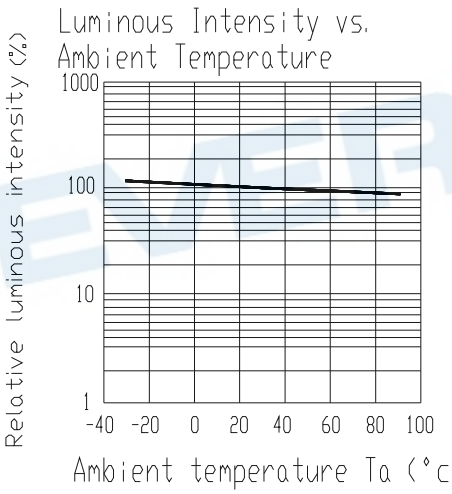

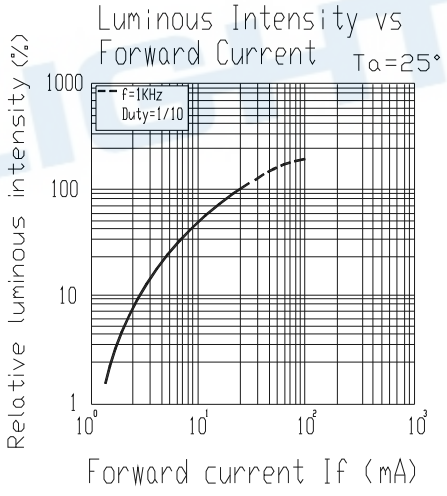

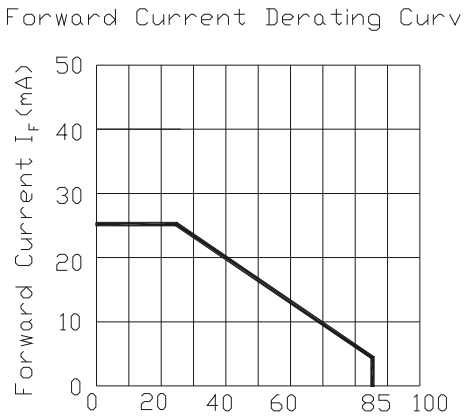

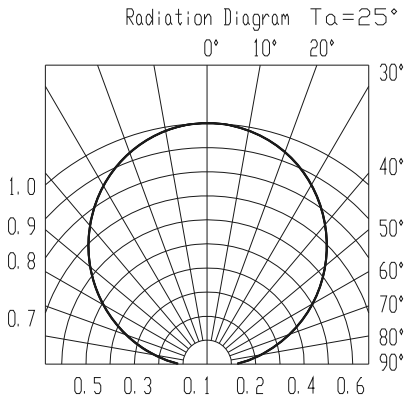

Technical Data Sheet

Top Views LEDs

67-22/R6GAC-B19/2T

Label explanation

CAT: Luminous Intensity Rank

HUE: Dom. Wavelength Rank

REF: Forward Voltage Rank

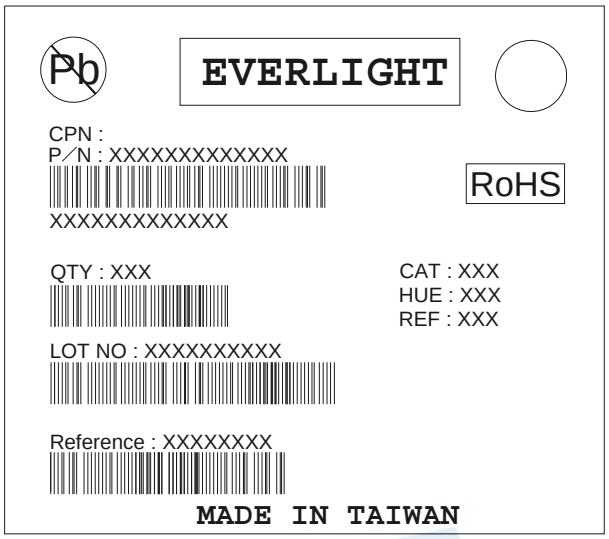

Reel Dimensions

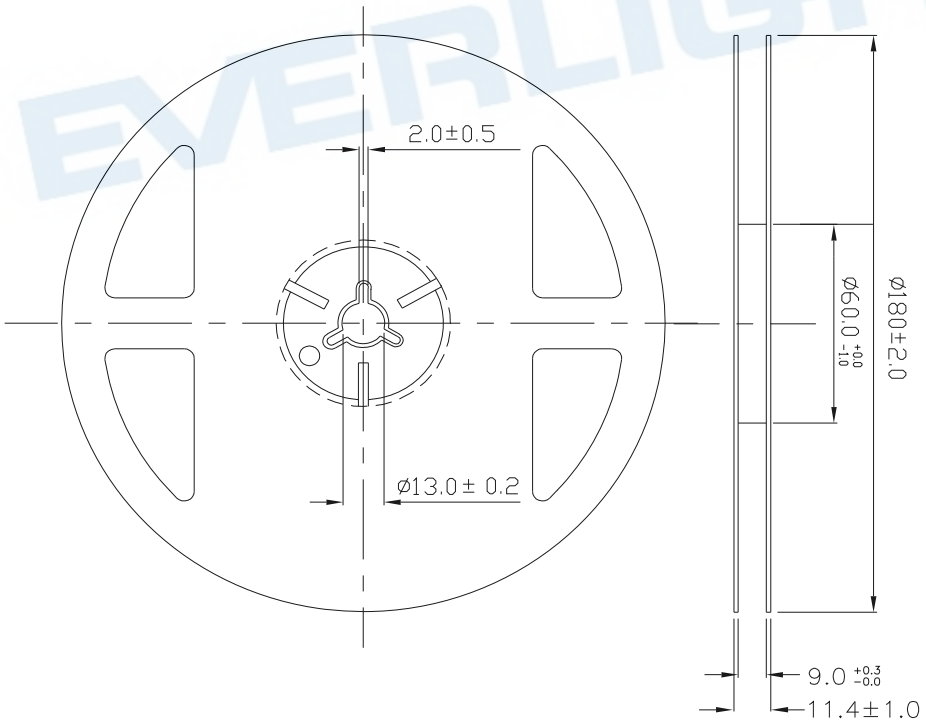

Note: The tolerances unless mentioned is ±0.1mm ,Unit = mm

Ver.:2 Release Date:10/26/2010 狀態:Approved(正式發行)

Technical Data Sheet

Top Views LEDs

67-22/R6GAC-B19/2T

Carrier Tape Dimensions: Loaded quantity 2000 PCS per reel.

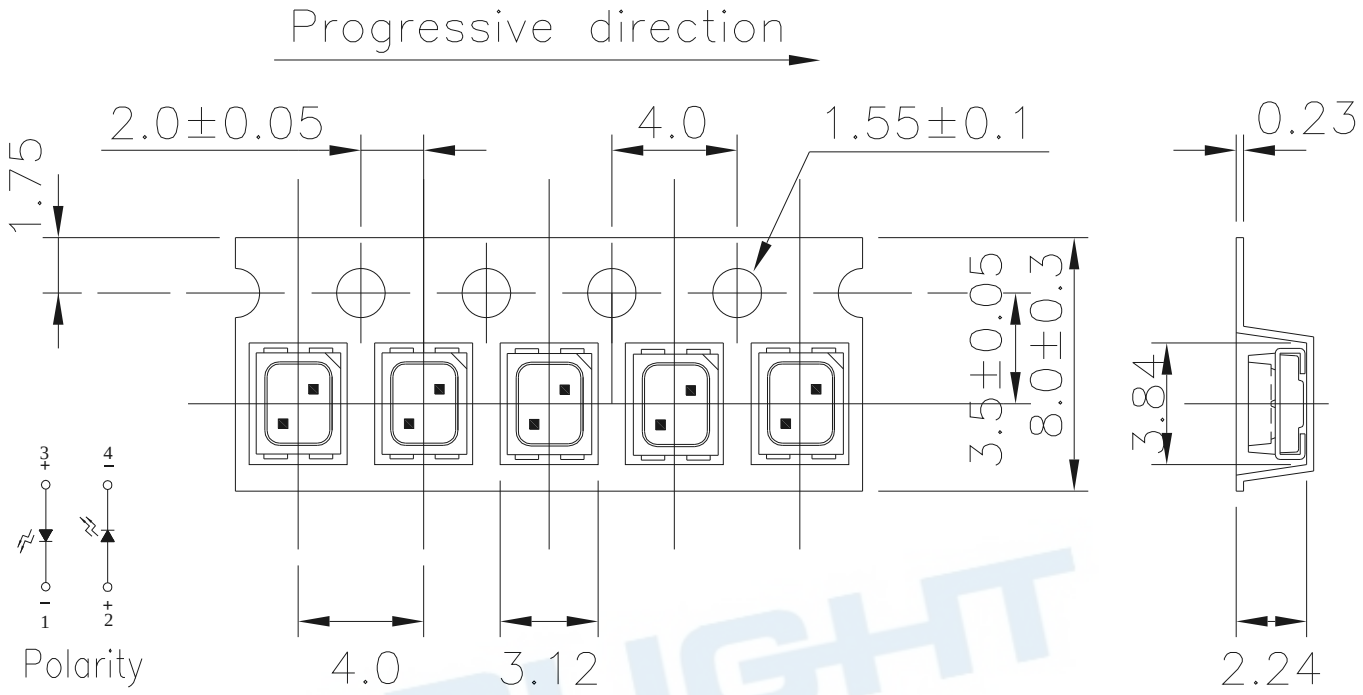

Note: The tolerances unless mentioned is ±0.1mm ,Unit = mm

Moisture Resistant Packaging

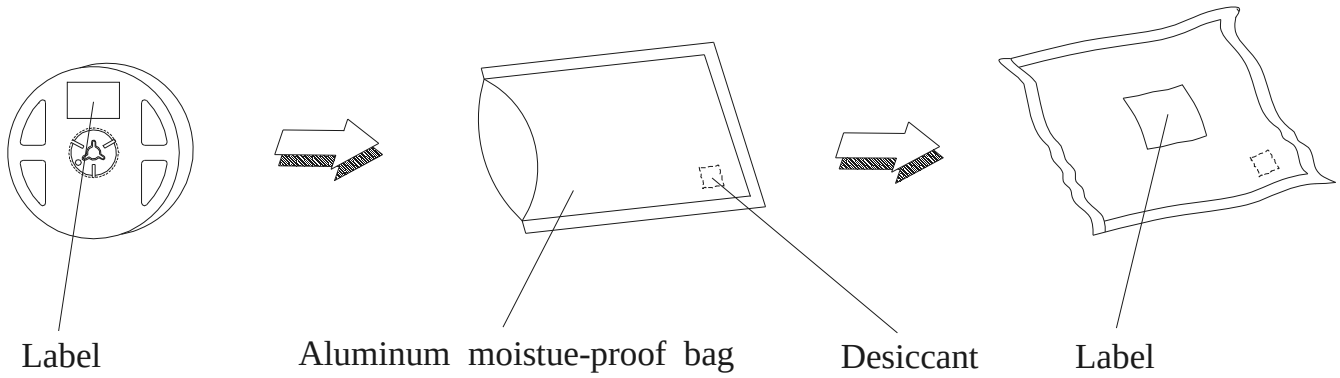

Ver.:2 Release Date:10/26/2010 狀態:Approved(正式發行)

Reliability Test Items And Conditions

The reliability of products shall be satisfied with items listed below.

Confidence level：90%

LTPD：10%

No.	Items	Test Condition	Test Hours/Cycles	Sample Size	Ac/Re
1	Reflow Soldering	Temp. : 260℃±5℃ Min. 5sec.	6 Min.	22 PCS.	0/1
2	Temperature Cycle	H : +100℃ 15min ∫ 5 min L : -40℃ 15min	300 Cycles	22 PCS.	0/1
3	Thermal Shock	H : +100℃ 5min ∫ 10 sec L : -10℃ 5min	300 Cycles	22 PCS.	0/1
4	High Temperature Storage	Temp. : 100℃	1000 Hrs.	22 PCS.	0/1
5	Low Temperature Storage	Temp. : -40℃	1000 Hrs.	22 PCS.	0/1
6	DC Operating Life	I_F = 20 mA	1000 Hrs.	22 PCS.	0/1
7	High Temperature / High Humidity	85℃/85%RH.	1000 Hrs.	22 PCS.	0/1

Precautions For Use

1. Over-current-proof

   Customer must apply resistors for protection , otherwise slight voltage shift will cause big current change (Burn out will happen).

2. Storage

   2.1 Do not open moisture proof bag before the products are ready to use.

   2.2 Before opening the package, the LEDs should be kept at 30℃ or less and 90%RH or less.

   2.3 After opening the package: The LED's floor life are 168 hours under 30℃ or less and 60% RH or less. If unused LEDs remain, it should be stored in moisture proof packages.

   2.4 If the moisture absorbent material (silica gel) has faded away or the LEDs have exceeded the storage time, baking treatment should be performed using the following conditions.

   Baking treatment : 60±5℃ for 24 hours.

3. Soldering Condition

   3.1 Pb-free solder temperature profile

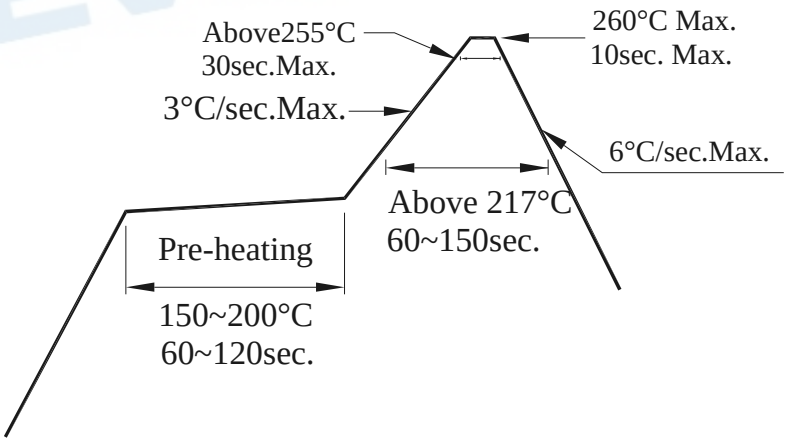

   3.2 Reflow soldering should not be done more than two times.

   3.3 When soldering, do not put stress on the LEDs during heating.

   3.4 After soldering, do not warp the circuit board.

4.Soldering Iron

Each terminal is to go to the tip of soldering iron temperature less than 350℃ for 3 seconds within once in less than the soldering iron capacity 25W. Leave two seconds and more intervals, and do soldering of each terminal. Be careful because the damage of the product is often started at the time of the hand solder.

5.Repairing

Repair should not be done after the LEDs have been soldered. When repairing is unavoidable, a double-head soldering iron should be used (as below figure). It should be confirmed beforehand whether the characteristics of the LEDs will or will not be damaged by repairing.

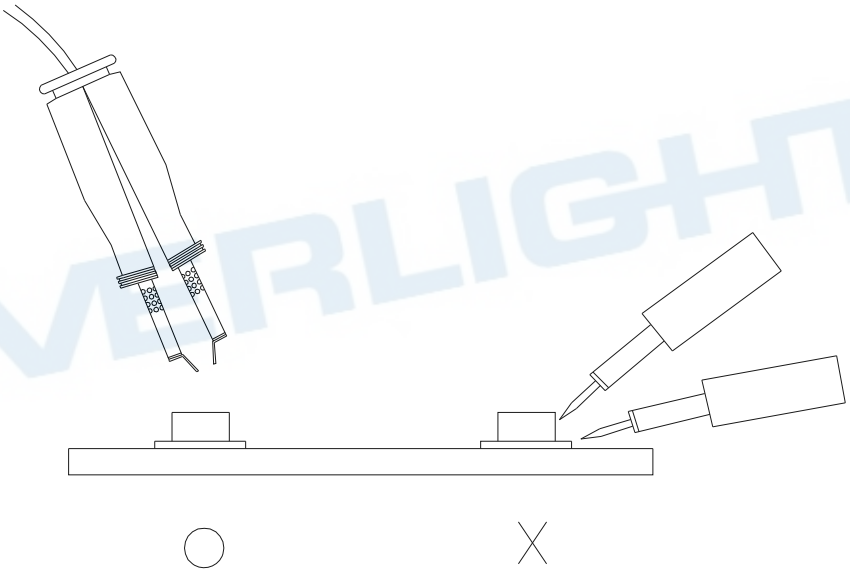

EVERLIGHT ELECTRONICS CO., LTD.
Office: No 25, Lane 76, Sec 3, Chung Yang Rd,
Tucheng, Taipei 236, Taiwan, R.O.C
Tel: 886-2-2267-2000, 2267-9936
Fax: 886-2267-6244, 2267-6189, 2267-6306
http://www.everlight.com

Ver.:2 Release Date:10/26/2010 狀態:Approved(正式發行)