BN 231

Rod ends
with integral self-aligning ball bearing
High type, right hand thread

ISO 12240-4 K

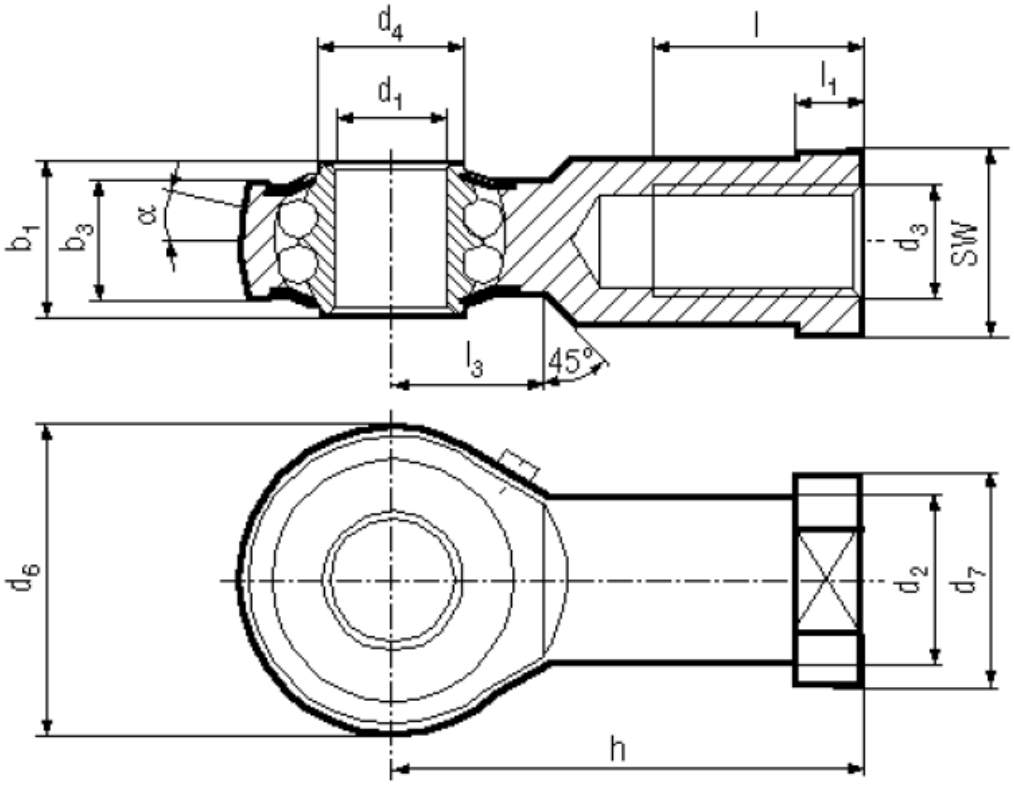

Trade mark	**Durbal**	Material	**Steel**
Type	**BRF**	Surface	**zinc plated blue**

Article No. - 1081861	
d_1	10
d_2	15
d_3	M10
d_4	12
d_6	28
d_7	19
b1	14
b3	10,5
h	43
l	20
l_1	6,5
l_3	15
v	8
SW	17
n	1225