KEMET Part Number: T510X337M010ATE035

T510, Tantalum, MnO2 Tantalum, Multi-Anode, 330 uF, 20%, 10 VDC, SMD, MnO2, Molded, Multiple Anodes, Low ESR, 35 mOhms, 7343, Height Max = 4.3mm

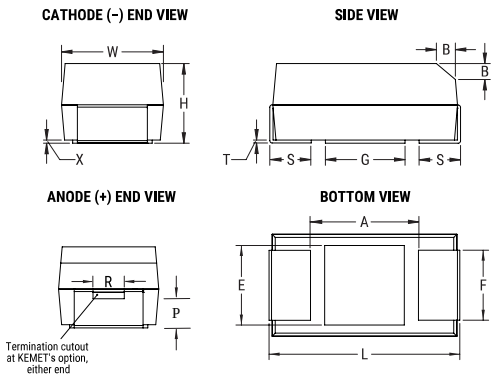

General Information

Series:	T510
Dielectric:	MnO2 Tantalum
Style:	SMD Chip
Description:	SMD, MnO2, Molded, Multiple Anodes, Low ESR
Features:	Low ESR
RoHS:	Yes
Termination:	Tin
AEC-Q200:	No
Shelf Life:	156 Weeks
MSL:	1

Dimensions

Footprint	7343
L	7.3mm +/-0.3mm
W	4.3mm +/-0.3mm
H	4mm +/-0.3mm
T	0.13mm REF
S	1.3mm +/-0.3mm
F	2.4mm +/-0.1mm
A	3.8mm MIN
B	0.5mm +/-0.15mm
E	3.5mm REF
G	3.5mm REF
P	1.7mm REF
R	1mm REF
X	0.1mm +/-0.1mm

Specifications

Capacitance:	330 uF
Capacitance Tolerance:	20%
Voltage DC:	10 VDC (85C), 6.7 VDC (125C)
Temperature Range:	-55/+125°C
Rated Temperature:	85°C
Dissipation Factor:	6% 120Hz 20C
Failure Rate:	N/A
Resistance:	35 mOhms (100kHz)
Ripple Current:	2777 mA (rms, 100kHz 25C), 2499.3 mA (rms, 85C), 1110.8 mA (rms, 125C)
Leakage Current:	33 uA (5min 20°C)

Packaging Specifications

Weight:	430.15 mg
Packaging:	T&R, 178mm
Packaging Quantity:	500

Statements of suitability for certain applications are based on our knowledge of typical operating conditions for such applications, but are not intended to constitute - and we specifically disclaim - any warranty concerning suitability for a specific customer application or use. This Information is intended for use only by customers who have the requisite experience and capability to determine the correct products for their application. Any technical advice inferred from this Information or otherwise provided by us with reference to the use of our products is given gratis, and we assume no obligation or liability for the advice given or results obtained.

© 2006 - 2020 KEMET