KEMET Part Number: T598V227M006AHE025

T598, Tantalum, Polymer Tantalum, 220 uF, 20%, 6.3 VDC, SMD, Polymer, Molded, Low ESR, AEC-Q200, 25 mOhms, 7343, Height Max = 2mm

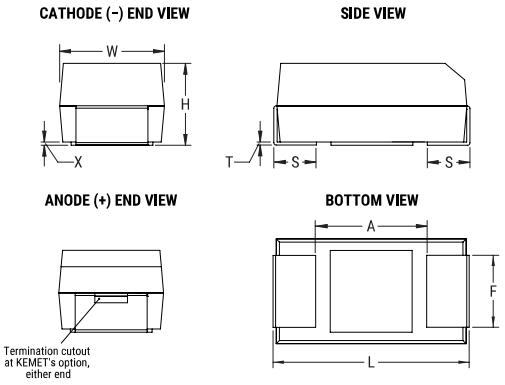

General Information	
Series:	T598
Dielectric:	Polymer Tantalum
Style:	SMD Chip
Description:	SMD, Polymer, Molded, Low ESR, AEC-Q200
Features:	Automotive
RoHS:	No
Prop 65:	**WARNING:** Cancer and reproductive harm - www.p65warnings.ca.gov.
REACH:	SVHC (Pb – CAS 7439-92-1)
Termination:	Solder Coated
Qualifications:	AEC-Q200
AEC-Q200:	Yes
Shelf Life:	52 Weeks
MSL:	3

Dimensions	
Footprint	7343
L	7.3mm +/-0.3mm
W	4.3mm +/-0.3mm
H	1.9mm +/-0.1mm
T	0.13mm REF
S	1.3mm +/-0.3mm
F	2.4mm +/-0.1mm
A	3.8mm MIN
X	0.5mm REF

Specifications	
Capacitance:	220 uF
Capacitance Tolerance:	20%
Voltage DC:	6.3 VDC (105C), 4.22 VDC (125C)
Temperature Range:	-55/+125°C
Rated Temperature:	105°C
Humidity:	85C, 85% RH, load, 1000 Hours
Dissipation Factor:	10% 120Hz 25C
Failure Rate:	N/A
Resistance:	25 mOhms (100kHz 25C)
Ripple Current:	4000 mA (rms, 100kHz 45C), 2800 mA (rms, 105C), 1000 mA (rms, 125C)
Leakage Current:	139 uA (5min 25°C)

Packaging Specifications	
Weight:	274.3 mg
Packaging:	T&R, 178mm
Packaging Quantity:	1000

Statements of suitability for certain applications are based on our knowledge of typical operating conditions for such applications, but are not intended to constitute - and we specifically disclaim - any warranty concerning suitability for a specific customer application or use. This Information is intended for use only by customers who have the requisite experience and capability to determine the correct products for their application. Any technical advice inferred from this Information or otherwise provided by us with reference to the use of our products is given gratis, and we assume no obligation or liability for the advice given or results obtained.

© 2006 - 2020 KEMET