TFT DISPLAY SPECIFICATION

RAYSTAR

RAYSTAR Optronics, Inc.
曜凌光電股份有限公司

曜凌光電股份有限公司
Raystar Optronics, Inc.
T: +886-4-2565-0761 | F: +886-4-2565-0760
salescontact@raystar-optronics.com | www.raystar-optronics.com

RFA6400E-AWH-DNN

SPECIFICATION

CUSTOMER:

APPROVED BY		
	☐	TFT Display Inspection Specification: https://www.raystar-optronics.com/download/products.htm
	☐	Precaution in use of TFT module: https://www.raystar-optronics.com/download/declaration.htm
PCB VERSION		
DATE		

FOR CUSTOMER USE ONLY

SALES BY	APPROVED BY	CHECKED BY	PREPARED BY

Release DATE:

RAYSTAR OPTRONICS

Revision History

VERSION	DATE	REVISED PAGE NO.	Note
0	2021/03/24		First issue
A	2021/05/10		Modify Contour drawing
B	2024/12/23		Modify Static electricity test
C	2025/01/06		Modify Reliability
D	2025/05/09		Modify interface,RGB input Timing & Initial code, LCM PIN Definition. Add 3-SPI Reset Timing & & Power On/Off sequence

RAYSTAR OPTRONICS

Contents

1.Module Classification Information

2.Summary

3.General Specifications

4.Interface

5.Contour Drawing

6.Absolute Maximum Ratings

7.Electrical Characteristics

8.Function Description

9.Optical Characteristics

10.Reliability

11.Initial Code For Reference

12.Other

RAYSTAR OPTRONICS

1.Module Classification Information

R	F	A6	40	0E	-	A	W	H	-	D	N	N
1	2	3	4	5	-	6	7	8	-	9	10	11

Item	Description	
1	R：Raystar Optronics Inc.	
2	Display Type：F→TFT Type, J→ Custom TFT	
3	Solution: A: 128x160 B:320x234 C:320x240 D:480x234 E:480x272 F:800x480 G:640x480 H:1024x600 I:320x480 J:240x320 K:1280x800 L:240x400 M:1024x768 N:128x128 O:480x800 P:640x320 Q:800x600 S:480x128 T:800x320 A6:480 x 480	
4	Display Size：4.0” TFT	
5	Version Code.	
6	Model Type: A：TFT LCD E：TFT+FR+CONTROL BOARD J：TFT+FR+A/D BOARD N：TFT+FR+A/D BOARD+CONTROL BOARD S：TFT+FR+POWER BOARD (DC TO DC) 1：TFT+CONTROL BOARD	6：TFT+FR H：TFT+D/V BOARD I：TFT+FR+D/V BOARD B：TFT+POWER BD
7	Polarizer Type, Temperature range, View direction	I→Transmissive, W. T, 6:00 ; C→Transmissive, N. T, 6:00 L→Transmissive, W.T,12:00 ; F→Transmissive, N.T,12:00 Y→Transmissive,W.T, IPS TFT ; W→Transmissive, Super W.T, IPS TFT A→Transmissive, N.T, IPS TFT Z→Transmissive, W.T, O-TFT R→Transmissive, Super W.T, O-TFT N→Transmissive, Super W.T, 6:00; Q→Transmissive, Super W.T, 12:00 V→Transmissive, Super W.T, VA TFT
8	Backlight	W：LED, White / H：LED, High Light White F：CCFL, White
9	Driver Method	D: Digital A: Analog L：LVDS M:MIPI
10	Interface	N：without control board A：8Bit B：16Bit S:SPI Interface R: RS232 U:USB I: I2C
11	TS	N：Without TS S：resistive touch panel C：capacitive touch panel capacitive touch panel (G-F-F) G：capacitive touch panel(G-G)

RAYSTAR OPTRONICS

RAYSTAR OPTRONICS

2.Summary

TFT 4.0” is a color active matrix thin film transistor (TFT) liquid crystal display (LCD) that uses amorphous silicon TFT as a switching device. This TFT LCD has a 4.0 (1:1) inch diagonally measured active display area with 480x480 (480 horizontal by 480 vertical pixel) resolution.

RAYSTAR OPTRONICS

3.General Specifications

- Size: 4.0 inch
- Dot Matrix: 480× 3(RGB) × 480 dots
- Module dimension: 78.8 × 82.95 × 4.77 mm
- Active area: 71.856 × 70.176 mm
- Pixel pitch: 0.1497× 0.1462 mm
- LCD type: TFT, Normally Black, Transmissive
- View Direction: 80/80/80/80
- Aspect Ratio: 1:1
- TFT Interface: 3W SPI+RGB24bit
- TFT Driver IC: ST7701S or Equivalent
- Backlight Type: LED ,Normally White
- With /Without TP: Without TP
- Surface: Glare

*Color tone slight changed by temperature and driving voltage.

RAYSTAR OPTRONICS

4.Interface

4.1. LCM PIN Definition

Pin	Symbol	Function
1	VLED-	Power for LED backlight cathode
2	VLED+	Power for LED backlight anode
3	GND	Power ground
4	VCC	Power supply
5	R0	Data bus
6	R1	
7	R2	
8	R3	
9	R4	
10	R5	
11	R6	
12	R7	
13	G0	Data bus
14	G1	
15	G2	
16	G3	
17	G4	
18	G5	
19	G6	
20	G7	
21	B0	Data bus
22	B1	
23	B2	
24	B3	
25	B4	
26	B5	
27	B6	
28	B7	
29	SCL	SCL: Serial clock input for SPI interface.

RAYSTAR OPTRONICS

30	PCLK	Dot clock signal for RGB interface operation
31	CS	SPI Chip select signal (CSX) Low: the chip is selected and accessible High: the chip is not selected and not accessible
32	HSYNC	Line synchronizing signal for RGB interface operation (HS)
33	VSYNC	Frame synchronizing signal for RGB interface operation (VS)
34	DE	Data enable signal for RGB interface operation Low: access enabled High: access inhibited
35	SDA	SDA: Serial data input/output (In: DIN, Out: DOUT) bidirectional pin for SPI Interface.
36	RESET	- The external reset input (RESX) - Initializes the chip with a low input. Be sure to execute a power-on reset after supplying power.
37-40	NC	No connect

RAYSTAR OPTRONICS

5.Contour Drawing

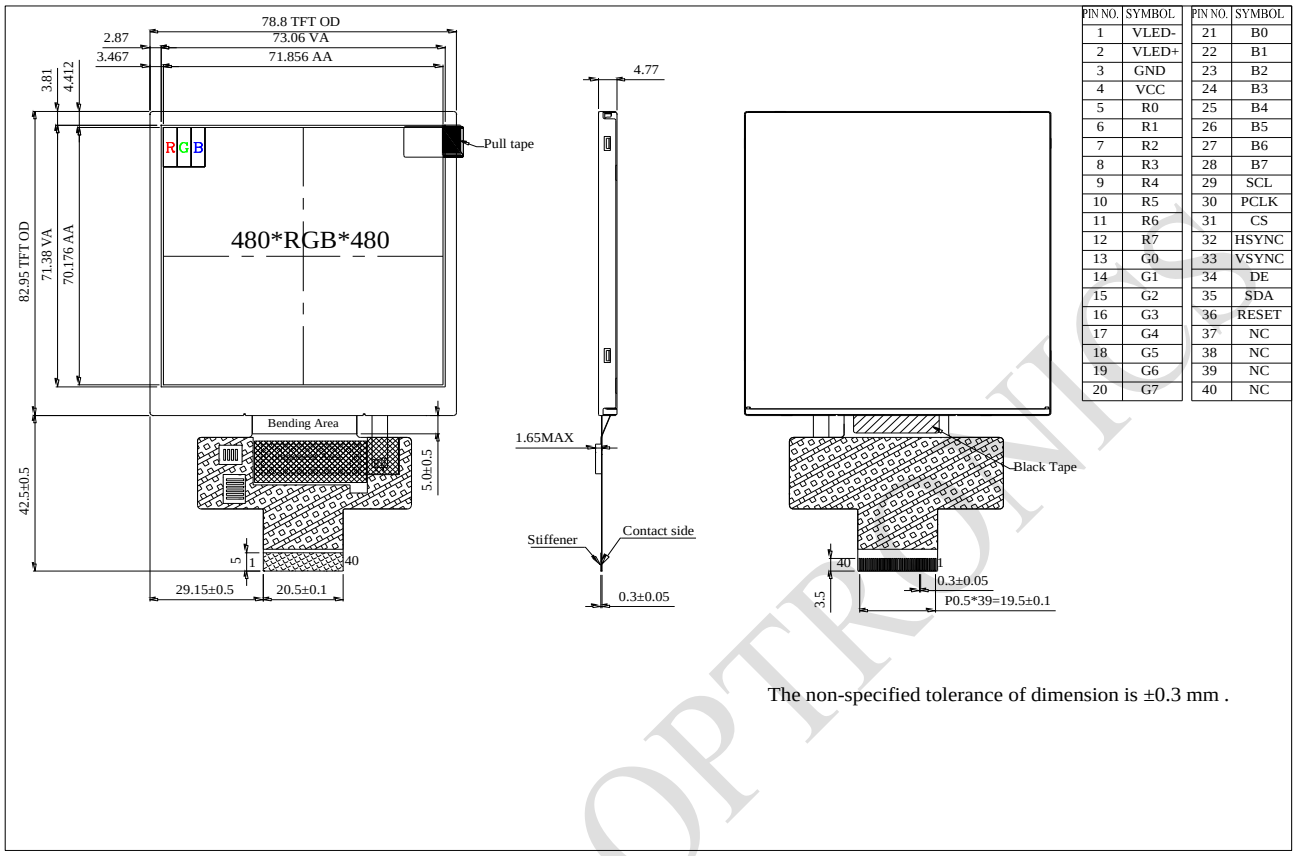

PIN NO.	SYMBOL	PIN NO.	SYMBOL
1	VLED-	21	B0
2	VLED+	22	B1
3	GND	23	B2
4	VCC	24	B3
5	R0	25	B4
6	R1	26	B5
7	R2	27	B6
8	R3	28	B7
9	R4	29	SCL
10	R5	30	PCLK
11	R6	31	CS
12	R7	32	HSYNC
13	G0	33	VSYNC
14	G1	34	DE
15	G2	35	SDA
16	G3	36	RESET
17	G4	37	NC
18	G5	38	NC
19	G6	39	NC
20	G7	40	NC

The non-specified tolerance of dimension is ±0.3 mm .

RAYSTAR OPTRONICS

6.Absolute Maximum Ratings

Item	Symbol	Min	Typ	Max	Unit
Operating Temperature	TOP	-30	—	+80	℃
Storage Temperature	TST	-30	—	+80	℃

Note: Device is subject to be damaged permanently if stresses beyond those absolute maximum ratings listed above

1. Temp. ≦ 60℃, 90% RH MAX. Temp.＞60℃, Absolute humidity shall be less than 90% RH at 60℃

RAYSTAR OPTRONICS

7.Electrical Characteristics

7.1. Typical Operation Conditions

Item	Symbol	Values			Unit	Remark
		Min.	Typ.	Max.		
Interface Supply Voltage	VCC	2.5	2.8	3.6	V	
Current for Driver(White)	I_{VCC}	-	27	40.5	mA	

7.2. Backlight Driving Conditions

Parameter	Symbol	Min.	Typ.	Max.	Unit	Remark
LED current	ILED	-	120	-	mA	
LED voltage	VLED+	13.5	15	17	V	Note 1
LED Life Time		50,000	-	-	Hr	Note 2,3,4

Note 1 : There are 1 Groups LED

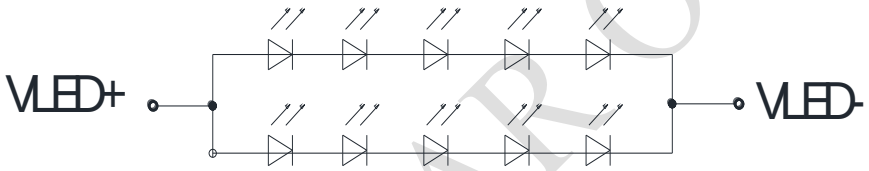

CIRCUIT DIAGRAM

Note 2 : Ta = 25 ℃
Note 3 : Brightness to be decreased to 50% of the initial value
Note 4 : The single LED lamp case.

RAYSTAR OPTRONICS

8.Function Description

8.1. RGB Interface

The ST7701S support RGB interface Mode 1 and Mode 2.
The Mode 1 and Mode 2 function is select by setting in the Command 2, please reference application note.
In RGB Mode 1, writing data to line buffer is done by PCLK and Video Data Bus (D[23:0]), when DE is high state. The external clocks (PCLK, VS and HS) are used for internal displaying clock. So, controller must always transfer PCLK, VS and HS signal to ST7701S.
In RGB Mode 2, back porch of Vsync is defined by VBP_HVRGB [7:0] of RGBCTR command. And back porch of Hsync is defined by HBP_HVRGB [7:0] of RGBCTR command. Front porch of Vsync are not setting by this mode.

RGB I/F Mode	PCLK	DE	VS	HS	DB[23:0]	Register for Blanking Porch setting
RGB Mode 1	Used	Used	Used	Used	Used	Not Used
RGB Mode 2	Used	Not Used	Used	Used	Used	Used

Symbol	Name	Description
PCLK	Pixel clock	Pixel clock for capturing pixels at display interface
HS	Horizontal sync	Horizontal synchronization timing signal
VS	Vertical sync	Vertical synchronization timing signal
DE	Data enable	Data enable signal (assertion indicates valid pixels)
DB[23:0]	Pixel data	Pixel data in 16-bit,18-bit and 24-bit format

Table 1 The interface signals of RGB interface

RAYSTAR

8.2. RGB Color Format

ST7701S supports two kinds of RGB interface, DE mode(mode 1)and HV mode(mode 2), and 16bit/18bitand 24 bit data format. When DE mode is selected and the VSYNC, HSYNC, DOTCLK, DE, D[23:0] pins can be used; when HV mode is selected and the VSYNC, HSYNC, DOTCLK, D[23:0] pins can be used. When using RGB interface, only serial interface can be selected.

Pad name	24 bits configuration VIPF[3:0]=0111	18 bits configuration VIPF[3:0]=0110		16 bits configuration VIPF[3:0]=0101
		MDT=0	MDT=1	
DB[23]	R7	Not used	Not used	Not used
DB[22]	R6	Not used	Not used	Not used
DB[21]	R5	R5	Not used	Not used
DB[20]	R4	R4	Not used	R4
DB[19]	R3	R3	Not used	R3
DB[18]	R2	R2	Not used	R2
DB[17]	R1	R1	R5	R1
DB[16]	R0	R0	R4	R0
DB[15]	G7	Not used	R3	Not used
DB[14]	G6	Not used	R2	Not used
DB[13]	G5	G5	R1	G5
DB[12]	G4	G4	R0	G4
DB[11]	G3	G3	G5	G3
DB[10]	G2	G2	G4	G2
DB[09]	G1	G1	G3	G1
DB[08]	G0	G0	G2	G0
DB[07]	B7	Not used	G1	Not used
DB[06]	B6	Not used	G0	Not used
DB[05]	B5	B5	B5	Not used
DB[04]	B4	B4	B4	B4
DB[03]	B3	B3	B3	B3
DB[02]	B2	B2	B2	B2
DB[01]	B1	B1	B1	B1
DB[00]	B0	B0	B0	B0

Table 2 The interface color mapping of RGB interface

8.3. RGB Interface Definition

The display operation via the RGB interface is synchronized with the VSYNC, HSYNC, and DOTCLK signals. The data can be written only within the specified area with low power consumption by using window address function. The back porch and front porch are used to set the RGB interface timing.

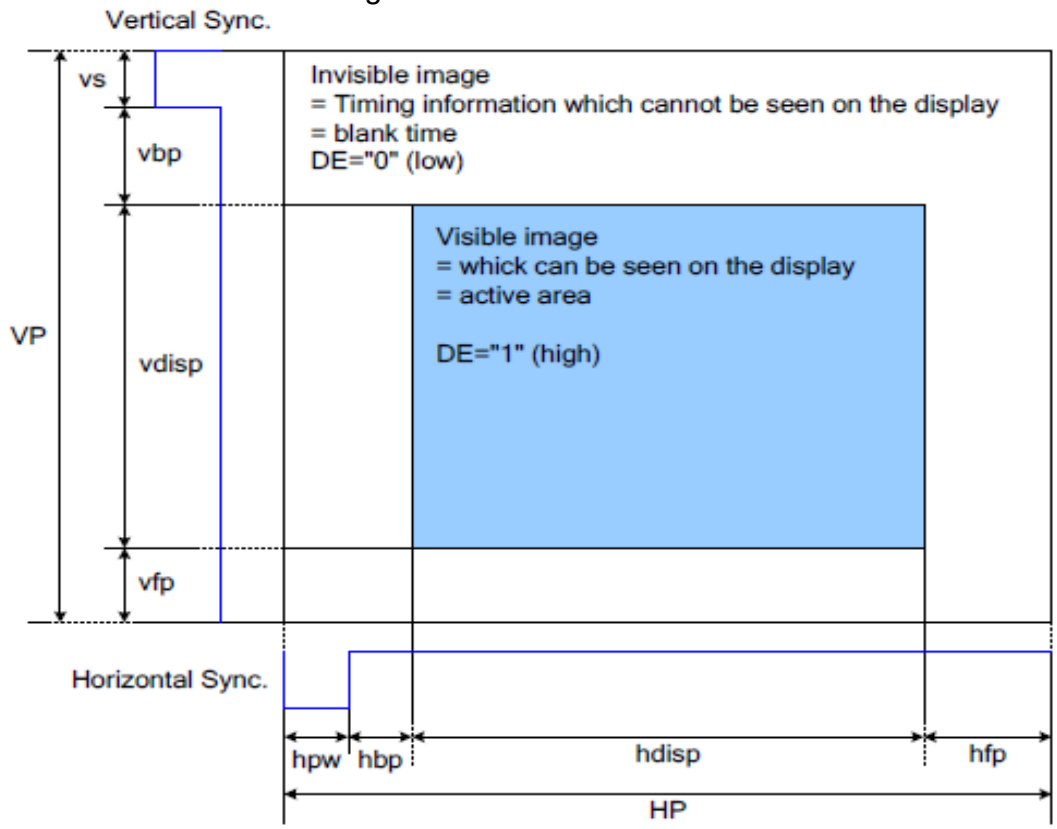

Figure 1Access Area by RGB Interface

RGB Input Timing Table VCC=2.8V, GND=0V, Ta=25℃

Parameter	Symbol	Min.	Typ.	Max.	Unit	Remark
DCLK	Fclk	10	17	30	MHz	
	tclk	100	58.8	33	ns	
HSD	hdisp	480	480	480	tclk	
	hpw	2	25	255	tclk	Note2
	hbp	2	30	255	tclk	Note2
	hfp	2	4	--	tclk	
VSD	vdisp	480	480	480	th	
	vs	2	8	254	th	Note2
	vbp	2	20	254	th	Note2
	vfp	2	15	--	th	

Note:

1. Typical value are related to the setting frame rate is 60Hz.
2. vs+vbp<=254 , hpw+hbp<=255
3. For reference only, it needs to be adjusted according to the actual display effect

8.4. RGB Interface Mode Selection

ST7701Ssupports two kinds of RGB interface, DE mode andHV mode. The table shown below uses command C3h to select RGB interface mode.

DE/Sync	RGB Mode
0	DE mode
1	HV mode

8.5. RGB Interface Timing

The timing chart of RGB interface DE mode is shown as follows.

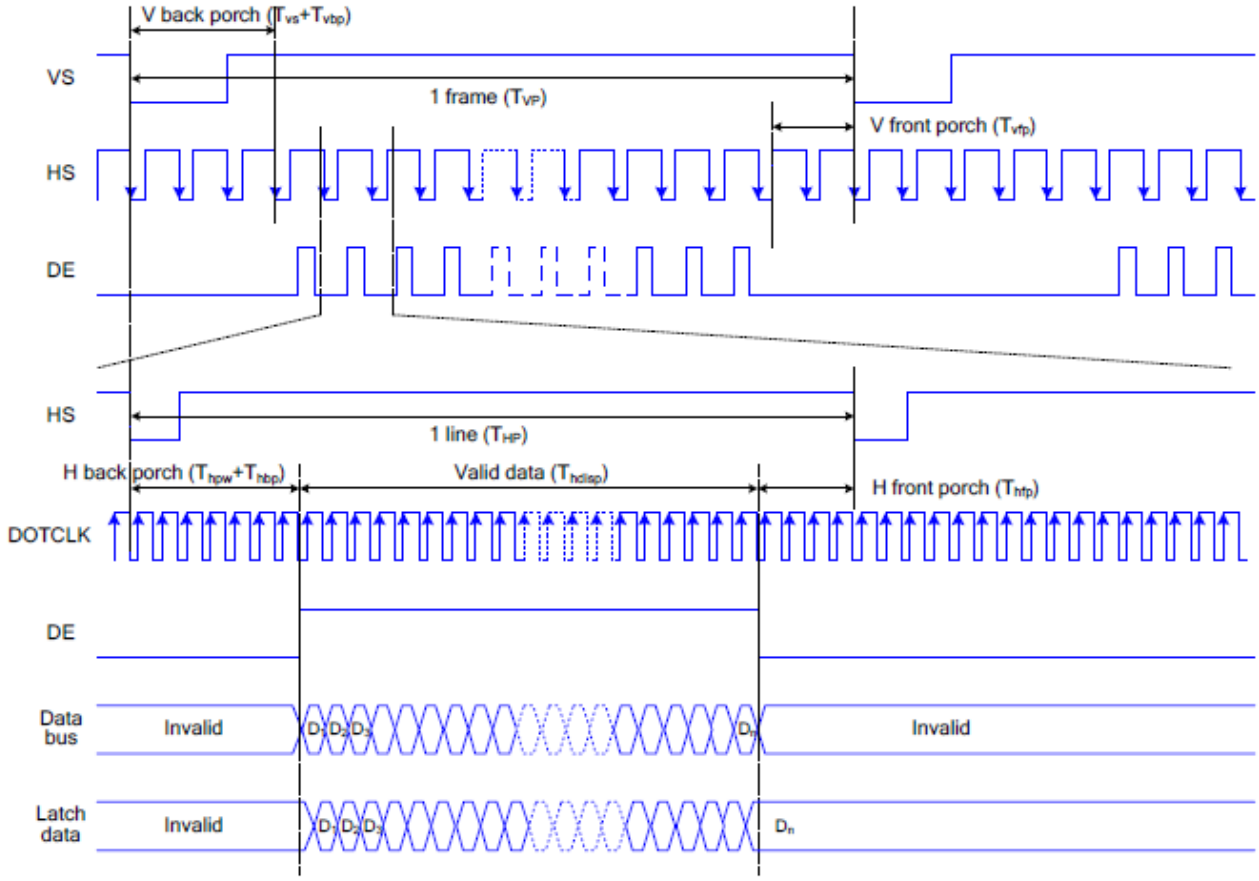

Note: The setting of front porch and back porch in host must match that in IC as this mode.

Figure 2 Timing Chart of Signals in RGB Interface DE Mode

The timing chart of RGB interface HV mode is shown as follows.

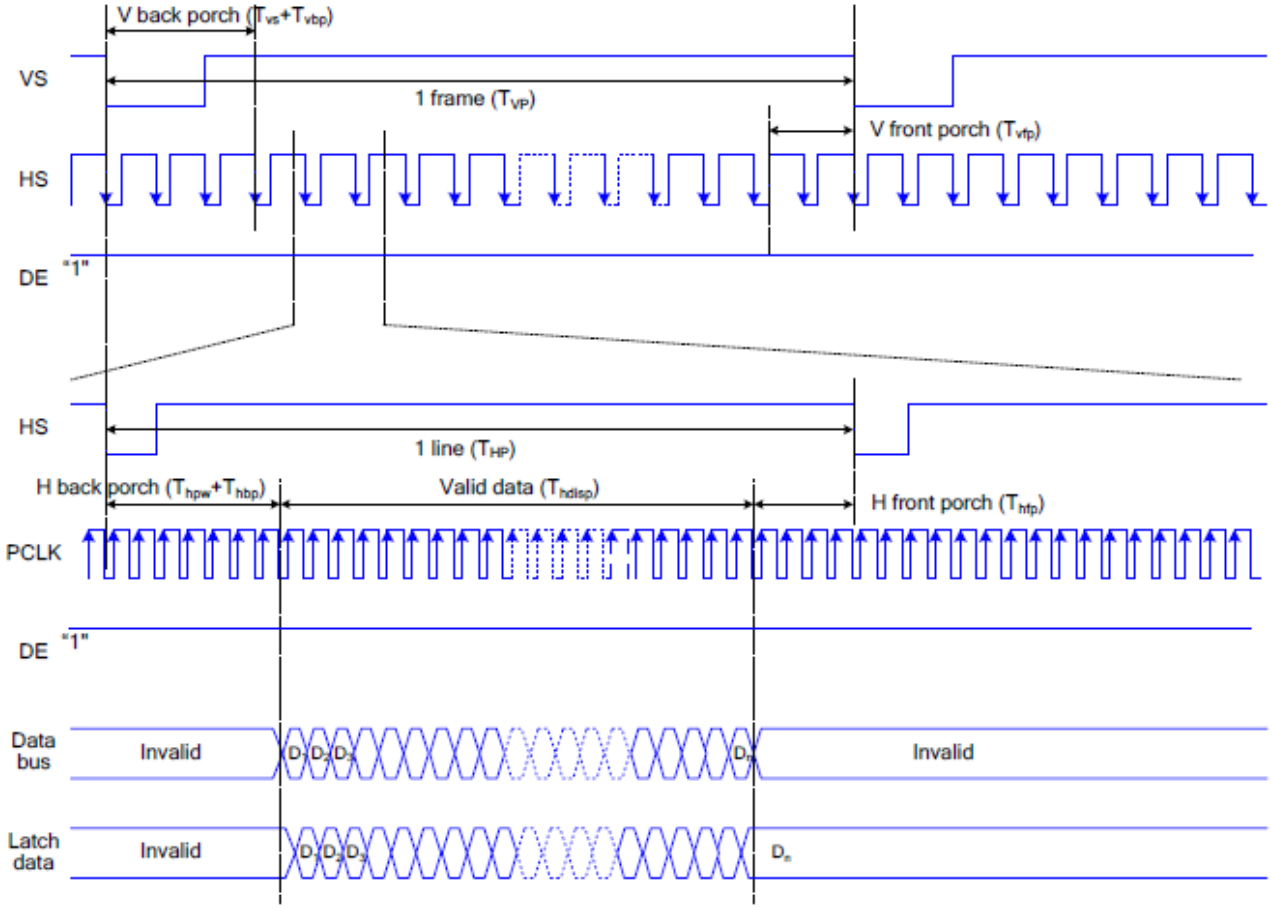

Figure 3 Timing chart of RGB interface HV mod

RAYSTAR

8.6. 9bit 3-line Serial Interface Timing (rise)

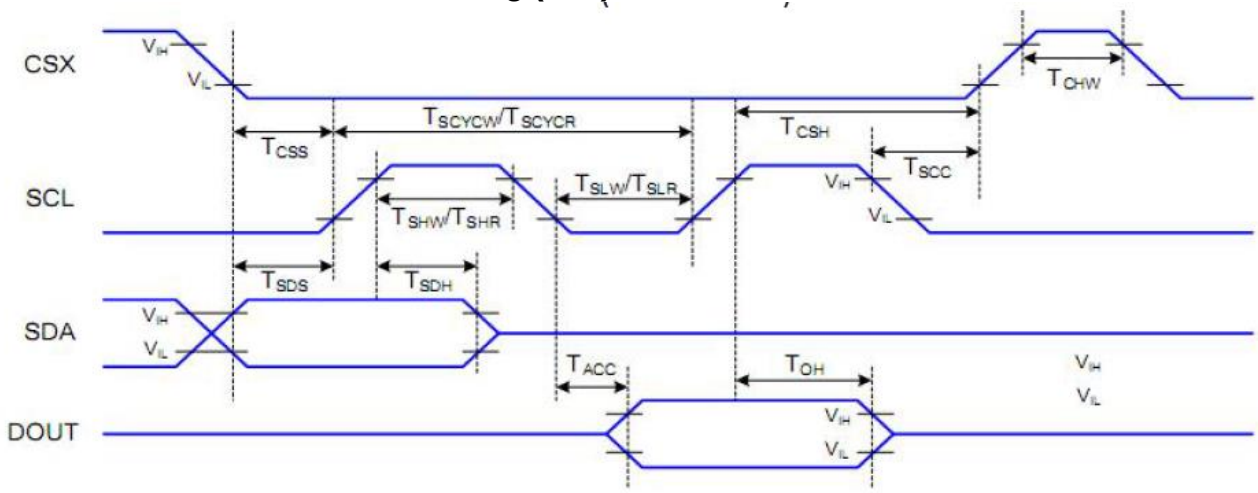

Signal	Symbol	Parameter	Min	Max	Unit	Description
CSX	T_{CSS}	Chip select setup time (write)	15		ns	
	T_{CSH}	Chip select hold time (write)	15		ns	
	T_{CSS}	Chip select setup time (read)	60		ns	
	T_{SCC}	Chip select hold time (read)	60		ns	
	T_{CHW}	Chip select "H" pulse width	40		ns	
SCL	T_{SCYCW}	Serial clock cycle (Write)	66		ns	
	T_{SHW}	SCL "H" pulse width (Write)	15		ns	
	T_{SLW}	SCL "L" pulse width (Write)	15		ns	
	T_{SCYCR}	Serial clock cycle (Read)	150		ns	
	T_{SHR}	SCL "H" pulse width (Read)	60		ns	
	T_{SLR}	SCL "L" pulse width (Read)	60		ns	
SDA (DIN)	T_{SDS}	Data setup time	10		ns	
	T_{SDH}	Data hold time	10		ns	
SDO (DOUT)	T_{ACC}	Access time	20	50	ns	
	T_{OH}	Output disable time	50	50	ns	

Note: The rising time and failing time(Tr, Tf) of input signal are specified at 15ns or less. Logic high and low levels are specified as 30% and 70% of VCC for input signals.

8.7. Reset input Timing

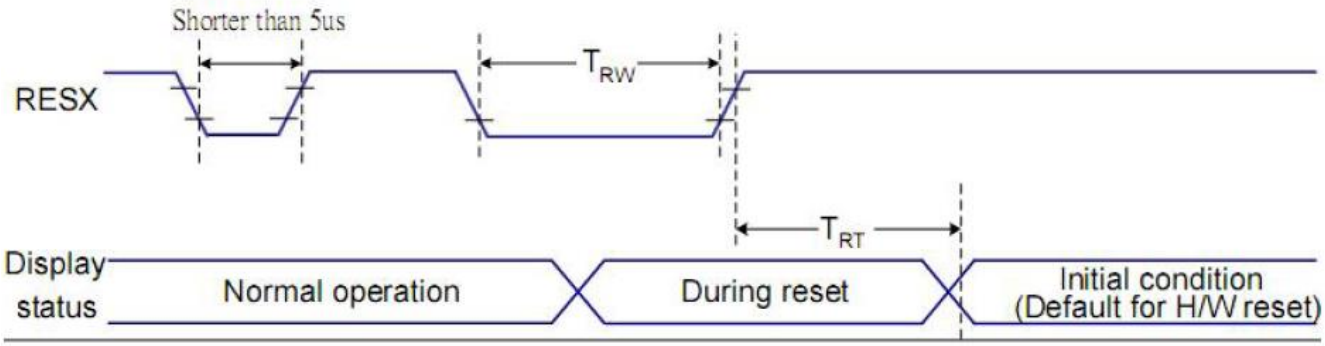

VDD=2.8, AGND=DGND=0V, Ta=25 ℃

Related Pins	Symbol	Parameter	MIN	MAX	Unit
RESX	TRW	Reset pulse duration	10	-	us
	TRT	Reset cancel	-	5 (Note 1, 5)	ms
				120(Note 1, 6, 7)	ms

Notes:

1. The reset cancel includes also required time for loading ID bytes, VCOM setting and other settings from NVM (or similar device) to registers. This loading is done every time when there is HW reset cancel time (tRT) within 5 ms after a rising edge of RESX.
2. Spike due to an electrostatic discharge on RESX line does not cause irregular system reset according to the table below:

RESX Pulse	Action
Shorter than 5us	Reset Rejected
Longer than 9us	Reset
Between 5us and 9us	Reset starts

3. During the Resetting period, the display will be blanked (The display is entering blanking sequence, which maximum time is 120 ms, when Reset Starts in Sleep Out –mode. The display remains the blank state in Sleep In –mode.) and then return to Default condition for Hardware Reset.
4. When Reset applied during Sleep In Mode.
5. When Reset applied during Sleep Out Mode.
6. It is necessary to wait 5msec after releasing RESX before sending commands. Also Sleep Out command cannot be sent for 120msec.

8.8. Power On/Off Sequence

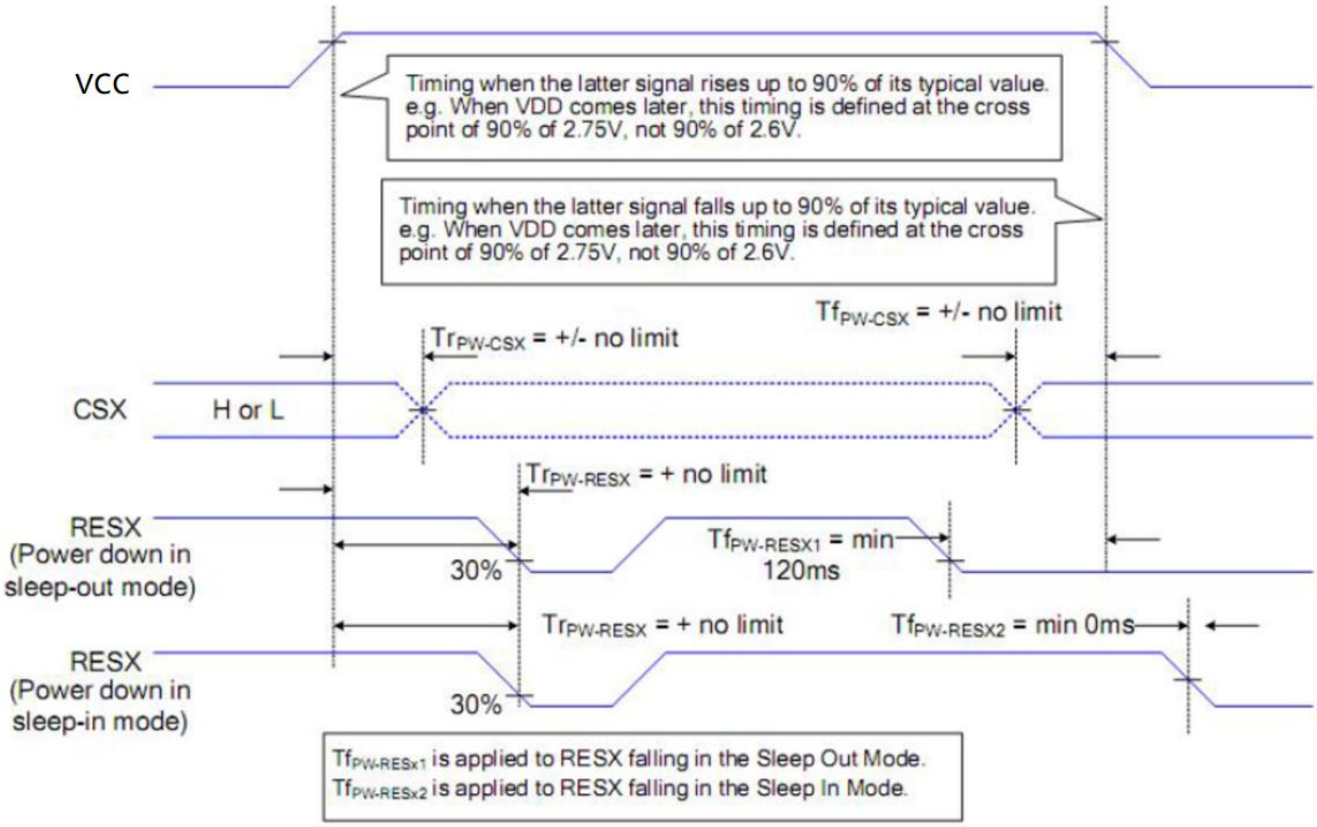

9.Optical Characteristics

Item		Symbol	Condition.	Min	Typ.	Max.	Unit	Remark
Response time		Tr+ Tf	θ=0°、Φ=0°	-	25	35	.ms	Note 3
Contrast ratio		CR	At optimized viewing angle	640	800	-	-	Note 4
Color Chromaticity	White	Wx	θ=0°、Φ=0	0.251	0.301	0.351		Note 2,6,7
		Wy		0.277	0.327	0.377		
Viewing angle	Hor.	ΘR	CR≧10	70	80	-	Deg.	Note 1
		ΘL		70	80	-		
	Ver.	ΦT		70	80	-		
		ΦB		70	80	-		
Brightness		-	-	900	1000	-	cd/m²	Center of display
Uniformity		(U)	-	75	-	-	%	Note 5

Ta=25±2℃

Note 1: Definition of viewing angle range

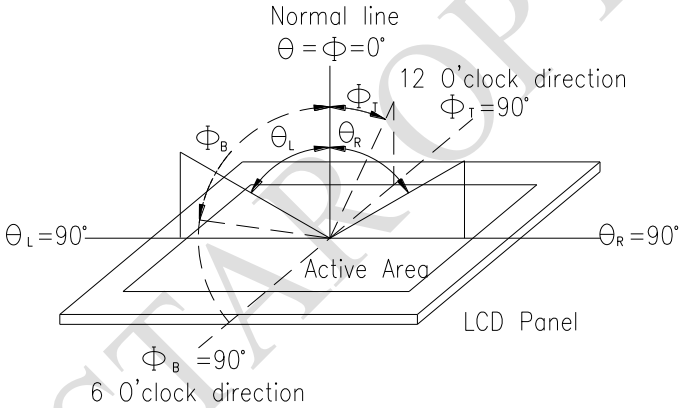

Fig. 9.1. Definition of viewing angle

Note 2: Test equipment setup:

After stabilizing and leaving the panel alone at a driven temperature for 10 minutes, the measurement should be executed. Measurement should be executed in a stable, windless, and dark room. Optical specifications are measured by Topcon BM-7or BM-5 luminance meter 1.0° field of view at a distance of 50cm and normal direction.

RAYSTAR OPTRONICS

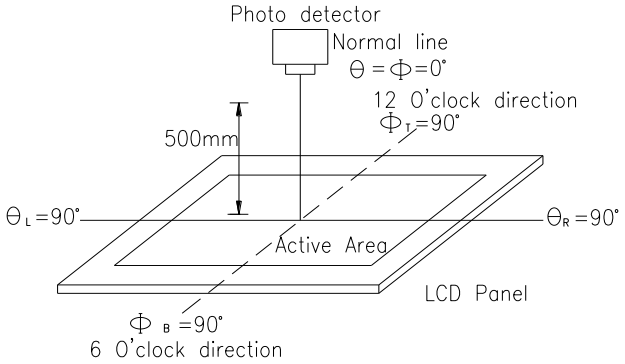

Fig. 9.2. Optical measurement system setup

Note 3: Definition of Response time:
The response time is defined as the LCD optical switching time interval between “White” state and “Black” state. Rise time, Tr, is the time between photo detector output intensity changed from 90%to 10%. And fall time, Tf, is the time between photo detector output intensity changed from 10%to 90%

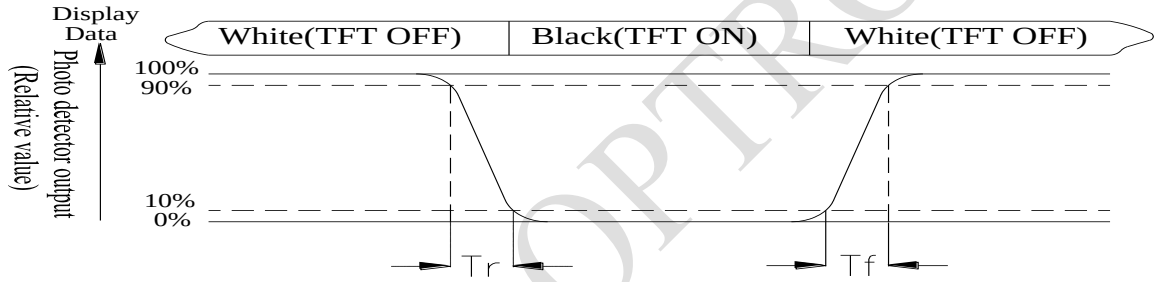

Note 4: Definition of contrast ratio:
The contrast ratio is defined as the following expression.

$$\text{Contrast ratio (CR)} = \frac{\text{Luminance measured when LCD on the "White" state}}{\text{Luminance measured when LCD on the "Black" state}}$$

RAYSTAR OPTRONICS

Note 5: Definition of Luminance Uniformity
Active area is divided into 9 measuring areas (reference the picture in below). Every measuring point is placed at the center of each measuring area.
Luminance Uniformity (U) = Lmin/Lmax x100%
L = Active area length
W = Active area width

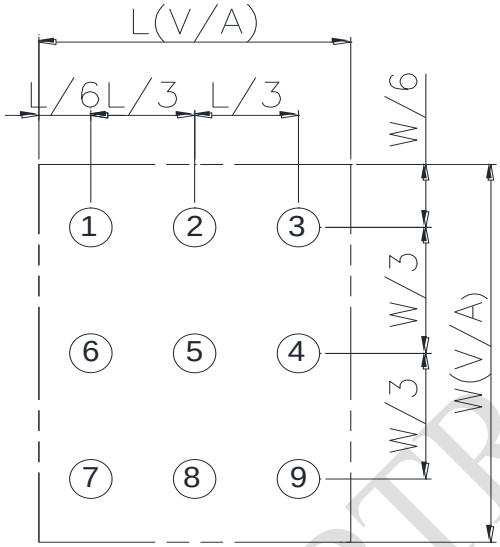

Fig 9.3. Definition of uniformity

Note 6: Definition of color chromaticity (CIE 1931)
Color coordinates measured at the center point of LCD

Note 7: Measured at the center area of the panel when all the input terminals of LCD panel are electrically opened.

RAYSTAR OPTRONICS

10.Reliability

Content of Reliability Test (Super Wide temperature, -30℃~80℃)

Environmental Test			
Test Item	**Content of Test**	**Test Condition**	**Note**
High Temperature storage	Endurance test applying the high storage temperature for a long time.	80℃ 200hrs	2
Low Temperature storage	Endurance test applying the low storage temperature for a long time.	-30℃ 200hrs	1,2
High Temperature Operation	Endurance test applying the electric stress (Voltage & Current) and the thermal stress to the element for a long time.	80℃ 200hrs	2
Low Temperature Operation	Endurance test applying the electric stress under low temperature for a long time.	-30℃ 200hrs	1,2
High Temperature/ Humidity Operation	The module should be allowed to stand at 60℃,90%RH max	60℃,90%RH 96hrs	1,2
Thermal shock resistance	The sample should be allowed stand the following 10 cycles of operation -30℃ 25℃ 80℃ 30min 5min 30min 1 cycle	-30℃/80℃ 10 cycles	2
Vibration test	Endurance test applying the vibration during transportation and using.	Total fixed amplitude : 1.5mm Vibration Frequency : 10~55Hz One cycle 60 seconds to 3 directions of X,Y,Z for Each 15 minutes	3
Static electricity test	Endurance test applying the electric stress to the terminal.	VS=±4KV(contact), ±4KV(air), RS=330Ω CS=150pF 10 times	4

Note1: No dew condensation to be observed.
Note2: The function test shall be conducted after 4 hours storage at the normal Temperature and humidity after remove from the test chamber.
Note3: The packing have to including into the vibration testing.
Note4: Endurance test applying the electric stress to the finished product housing

RAYSTAR OPTRONICS

11.Initial Code For Reference

Void ST7701S_Initial Code(void)

{

```
WriteComm(0x11);
WriteData(0x00);

WriteComm(0xFF);
WriteData(0x77);
WriteData(0x01);
WriteData(0x00);
WriteData(0x00);
WriteData(0x10);

WriteComm(0xC0);
WriteData(0x3B);
WriteData(0x00);

WriteComm(0xC1);
WriteData(0x0D);
WriteData(0x02);

WriteComm(0xC2);
WriteData(0x21);
WriteData(0x08);

WriteComm(0xB0);
WriteData(0x00);
WriteData(0x11);
WriteData(0x18);
WriteData(0x0E);
WriteData(0x11);
WriteData(0x06);
WriteData(0x07);
WriteData(0x08);
WriteData(0x07);
WriteData(0x22);
WriteData(0x04);
WriteData(0x12);
WriteData(0x0F);
WriteData(0xAA);
WriteData(0x31);
WriteData(0x18);

WriteComm(0xB1);
WriteData(0x00);
WriteData(0x11);
WriteData(0x19);
WriteData(0x0E);
```

RAYSTAR OPTRONICS

```
WriteData(0x12);
WriteData(0x07);
WriteData(0x08);
WriteData(0x08);
WriteData(0x08);
WriteData(0x22);
WriteData(0x04);
WriteData(0x11);
WriteData(0x11);
WriteData(0xA9);
WriteData(0x32);
WriteData(0x18);

WriteComm(0xFF);
WriteData(0x77);
WriteData(0x01);
WriteData(0x00);
WriteData(0x00);
WriteData(0x11);

WriteComm(0xB0);
WriteData(0x60);

WriteComm(0xB1);
WriteData(0x30);

WriteComm(0xB2);
WriteData(0x87);

WriteComm(0xB3);
WriteData(0x80);

WriteComm(0xB5);
WriteData(0x49);

WriteComm(0xB7);
WriteData(0x85);

WriteComm(0xB8);
WriteData(0x21);

WriteComm(0xB9);
WriteData(0x10);

WriteComm(0xC1);
WriteData(0x78);

WriteComm(0xC2);
```

RAYSTAR OPTRONICS

```
WriteData(0x78);

WriteComm(0xE0);
WriteData(0x00);
WriteData(0x1B);
WriteData(0x02);

WriteComm(0xE1);
WriteData(0x08);
WriteData(0xA0);
WriteData(0x00);
WriteData(0x00);
WriteData(0x07);
WriteData(0xA0);
WriteData(0x00);
WriteData(0x00);
WriteData(0x00);
WriteData(0x44);
WriteData(0x44);

WriteComm(0xE2);
WriteData(0x11);
WriteData(0x11);
WriteData(0x44);
WriteData(0x44);
WriteData(0xED);
WriteData(0xA0);
WriteData(0x00);
WriteData(0x00);
WriteData(0xEC);
WriteData(0xA0);
WriteData(0x00);
WriteData(0x00);

WriteComm(0xE3);
WriteData(0x00);
WriteData(0x00);
WriteData(0x11);
WriteData(0x11);

WriteComm(0xE4);
WriteData(0x44);
WriteData(0x44);

WriteComm(0xE5);
WriteData(0x0A);
WriteData(0xE9);
WriteData(0xD8);
```

RAYSTAR OPTRONICS

```
WriteData(0xA0);
WriteData(0x0C);
WriteData(0xEB);
WriteData(0xD8);
WriteData(0xA0);
WriteData(0x0E);
WriteData(0xED);
WriteData(0xD8);
WriteData(0xA0);
WriteData(0x10);
WriteData(0xEF);
WriteData(0xD8);
WriteData(0xA0);

WriteComm(0xE6);
WriteData(0x00);
WriteData(0x00);
WriteData(0x11);
WriteData(0x11);

WriteComm(0xE7);
WriteData(0x44);
WriteData(0x44);

WriteComm(0xE8);
WriteData(0x09);
WriteData(0xE8);
WriteData(0xD8);
WriteData(0xA0);
WriteData(0x0B);
WriteData(0xEA);
WriteData(0xD8);
WriteData(0xA0);
WriteData(0x0D);
WriteData(0xEC);
WriteData(0xD8);
WriteData(0xA0);
WriteData(0x0F);
WriteData(0xEE);
WriteData(0xD8);
WriteData(0xA0);

WriteComm(0xEB);
WriteData(0x02);
WriteData(0x00);
WriteData(0xE4);
WriteData(0xE4);
WriteData(0x88);
```

RAYSTAR OPTRONICS

```
WriteData(0x00);
WriteData(0x40);

WriteComm(0xEC);
WriteData(0x3C);
WriteData(0x00);

WriteComm(0xED);
WriteData(0xAB);
WriteData(0x89);
WriteData(0x76);
WriteData(0x54);
WriteData(0x02);
WriteData(0xFF);
WriteData(0xFF);
WriteData(0xFF);
WriteData(0xFF);
WriteData(0xFF);
WriteData(0xFF);
WriteData(0x20);
WriteData(0x45);
WriteData(0x67);
WriteData(0x98);
WriteData(0xBA);

WriteComm(0xFF);
WriteData(0x77);
WriteData(0x01);
WriteData(0x00);
WriteData(0x00);
WriteData(0x00);

WriteComm(0x11);
WriteData(0x00);
delay(200);

WriteComm(0x29);
WriteData(0x00);
delay(200);
}
```

RAYSTAR OPTRONICS

Page: 1

LCM Sample Estimate Feedback Sheet		
Module Number：_____		
1、Panel Specification：		
1. Panel Type：	□ Pass	□ NG ,_____
2. View Direction：	□ Pass	□ NG ,_____
3. Numbers of Dots：	□ Pass	□ NG ,_____
4. View Area：	□ Pass	□ NG ,_____
5. Active Area：	□ Pass	□ NG ,_____
6.Operating Temperature：	□ Pass	□ NG ,_____
7.Storage Temperature：	□ Pass	□ NG ,_____
8.Others：_____		
2、Mechanical Specification：		
1. PCB Size：	□ Pass	□ NG ,_____
2.Frame Size：	□ Pass	□ NG ,_____
3.Materal of Frame：	□ Pass	□ NG ,_____
4.Connector Position：	□ Pass	□ NG ,_____
5.Fix Hole Position：	□ Pass	□ NG ,_____
6.Backlight Position：	□ Pass	□ NG ,_____
7. Thickness of PCB：	□ Pass	□ NG ,_____
8. Height of Frame to PCB：	□ Pass	□ NG ,_____
9.Height of Module：	□ Pass	□ NG ,_____
10.Others：	□ Pass	□ NG ,_____
3、Relative Hole Size：		
1.Pitch of Connector：	□ Pass	□ NG ,_____
2.Hole size of Connector：	□ Pass	□ NG ,_____
3.Mounting Hole size：	□ Pass	□ NG ,_____
4.Mounting Hole Type：	□ Pass	□ NG ,_____
5.Others：	□ Pass	□ NG ,_____
4、Backlight Specification：		
1.B/L Type：	□ Pass	□ NG ,_____
2.B/L Color：	□ Pass	□ NG ,_____
3.B/L Driving Voltage (Reference for LED Type)：□ Pass □ NG ,_____		
4.B/L Driving Current：	□ Pass	□ NG ,_____
5.Brightness of B/L：	□ Pass	□ NG ,_____
6.B/L Solder Method：	□ Pass	□ NG ,_____
7.Others：	□ Pass	□ NG ,_____

>> **Go to page 2** <<

RAYSTAR OPTRONICS

Module Number：_____		
5、Electronic Characteristics of Module：		
1.Input Voltage：	□ Pass	□ NG ,_____
2.Supply Current：	□ Pass	□ NG ,_____
3.Driving Voltage for LCD：	□ Pass	□ NG ,_____
4.Contrast for LCD：	□ Pass	□ NG ,_____
5.B/L Driving Method：	□ Pass	□ NG ,_____
6.Negative Voltage Output：	□ Pass	□ NG ,_____
7.Interface Function：	□ Pass	□ NG ,_____
8.LCD Uniformity：	□ Pass	□ NG ,_____
9.ESD test：	□ Pass	□ NG ,_____
10.Others：	□ Pass	□ NG ,_____

6、Summary：

Sales signature：_____

Customer Signature：_____ **Date**： / /

RAYSTAR OPTRONICS