DRG. No.	SWITCH
C 42681	BVM3FYR-ULS
SHEET OF SHEETS	

DRAWN	DATE	APPROVED	
P.V.	18/9/95	DRAWING OFFICE	SALES DEPT.
TRACED	SCALE 3/1	P. Vinenga.	

DO NOT SCALE

INSTALLATION DRAWING

THIRD ANGLE PROJECTION

© THIS DRAWING IS THE PROPERTY OF BURGESS MICRO SWITCH CO. LTD. AND MUST NOT BE USED OR COPIED, ENTIRELY OR IN PART, WITHOUT THE PERMISSION OF BURGESS MICRO SWITCH CO. LTD.

SPECIFICATION

FREE POSITION :- 22.35 (.88) MAX.

TOTAL TRAVEL POSITION :- 19.0 (.75)

ACTUATING FORCE :- 5.0N (17.99ozf) MAX AT CONTACT BREAK

ACTUATING FORCE :- 5.5N (19.78ozf) MAX AT TOTAL TRAVEL POSITION

MIN GAP AT TOTAL :- 3.0 (.12) TRAVEL POSITION

SPECIAL FEATURE :-
TESTED AND STAMPED TO U.L. AND C.S.A. REQUIREMENTS
SWITCH SUBJECT TO 100,000 OPERATIONS COMPLIANCE TEST

APPROVAL RATING :-
10A - 250V A.C.
1/2 HP - 125 OR 250V A.C.

DIAGRAM OF CONNECTIONS

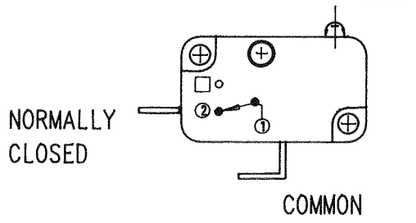

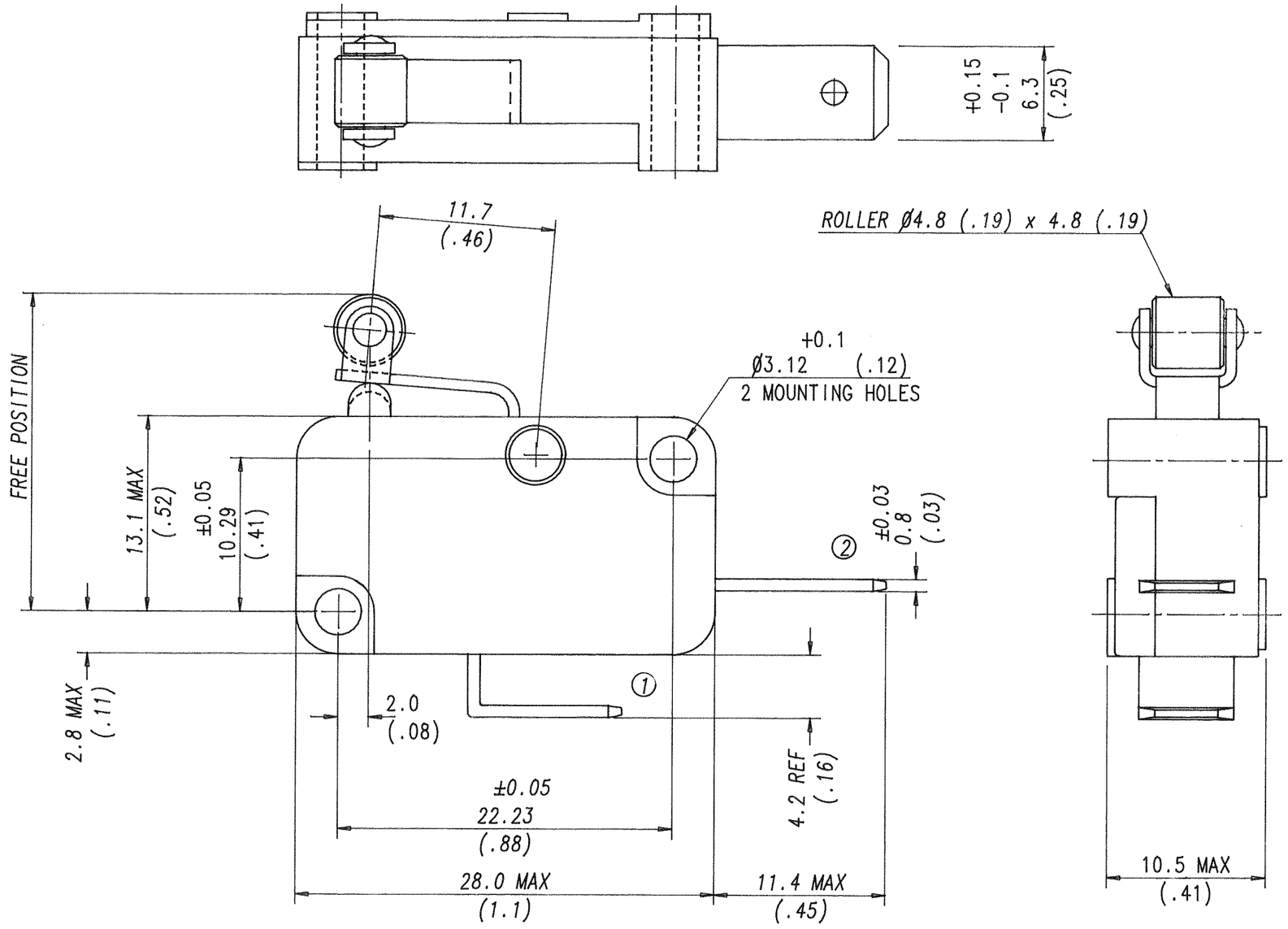

BURGESS MICRO SWITCH COMPANY LTD.
DUKES WAY, TEAM VALLEY, GATESHEAD,
TYNE & WEAR NE11 0UB
Tel. 091 4877171 Telex: 53229 Fax: (3) 091 4871610

ISSUE No. & DATE	
1	

ALL DIMENSIONS SPECIFIED IN MILLIMETRES.
TOLERANCES UNLESS STATED:- NO DECIMAL PLACE ± 0.5
1 DECIMAL PLACE ± 0.25 2 DECIMAL PLACES ± 0.15
ANGULAR ± 1° INCH-OUNCE UNITS (IN BRACKETS)

DEGREE OF PROTECTION:-

WEIGHT:-

SWITCH	DRG. No.
BVM3FYR-ULS	C 42681
	SHEET OF SHEETS

U.D.O. 3091/94