# KEMET Part Number: T591D157M010ATE025

T591, Tantalum, Polymer Tantalum, 150 uF, 20%, 10 VDC, SMD, Polymer, Molded, Low ESR, 25 mOhms, 7343, Height Max = 3.1mm

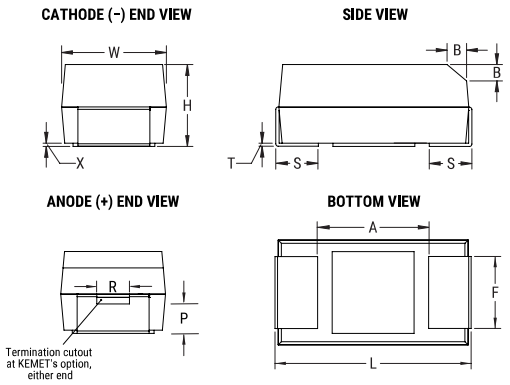


| General Information | |
|---|---|
| **Series:** | T591 |
| **Dielectric:** | Polymer Tantalum |
| **Style:** | SMD Chip |
| **Description:** | SMD, Polymer, Molded, Low ESR |
| **Features:** | Automotive |
| **RoHS:** | Yes |
| **Termination:** | Tin |
| **Qualifications:** | AEC-Q200 (Limited 500 Hrs 85C/85% RH/Ur) |
| **AEC-Q200:** | Subject to PPAP/PSW and change control |
| **Shelf Life:** | 52 Weeks |
| **MSL:** | 3 |

| Dimensions | |
|---|---|
| **Footprint** | 7343 |
| **L** | 7.3mm +/-0.3mm |
| **W** | 4.3mm +/-0.3mm |
| **H** | 2.8mm +/-0.3mm |
| **T** | 0.13mm REF |
| **S** | 1.3mm +/-0.3mm |
| **F** | 2.4mm +/-0.1mm |
| **A** | 3.8mm MIN |
| **B** | 0.5mm +/-0.15mm |
| **P** | 0.9mm REF |
| **R** | 1mm REF |
| **X** | 0.1mm +/-0.1mm |

| Specifications | |
|---|---|
| **Capacitance:** | 150 uF |
| **Capacitance Tolerance:** | 20% |
| **Voltage DC:** | 10 VDC (105C), 6.67 VDC (125C) |
| **Temperature Range:** | -55/+125°C |
| **Rated Temperature:** | 105°C |
| **Humidity:** | 85C, 85% RH, load, 500 Hours |
| **Dissipation Factor:** | 10% 120Hz 25C |
| **Failure Rate:** | N/A |
| **Resistance:** | 25 mOhms (100kHz 25C) |
| **Ripple Current:** | 4240 mA (rms, 100kHz 45C), 2968 mA (rms, 105C), 1060 mA (rms, 125C) |
| **Leakage Current:** | 150 uA (5min 25°C) |

| Packaging Specifications | |
|---|---|
| **Weight:** | 434.83 mg |
| **Packaging:** | T&R, 178mm |
| **Packaging Quantity:** | 500 |

Statements of suitability for certain applications are based on our knowledge of typical operating conditions for such applications, but are not intended to constitute - and we specifically disclaim - any warranty concerning suitability for a specific customer application or use. This Information is intended for use only by customers who have the requisite experience and capability to determine the correct products for their application. Any technical advice inferred from this Information or otherwise provided by us with reference to the use of our products is given gratis, and we assume no obligation or liability for the advice given or results obtained.



© 2006 - 2020 KEMET