nRF52832 - Product Specification v1.0

All rights reserved.
Reproduction in whole or in part is prohibited without the prior written permission of the copyright holder.
2016-02-17

Contents

1 Revision history ... 9

2 About this document ... 10

2.1 Peripheral naming and abbreviations ... 10
2.2 Register tables ... 10
2.3 Registers ... 11

3 Block diagram ... 12

4 Pin assignments ... 13

4.1 QFN48 pin assignments ... 13

5 Absolute maximum ratings ... 16

6 Recommended operating conditions ... 17

7 CPU ... 18

7.1 Floating point interrupt ... 18
7.2 Electrical Specification ... 18
7.3 CPU and support module configuration ... 19

8 Memory ... 20

8.1 RAM - Random access memory ... 20
8.2 Flash - Non-volatile memory ... 20
8.3 Memory map ... 21
8.4 Instantiation ... 21

9 AHB multilayer ... 23

9.1 AHB multilayer priorities ... 23

10 EasyDMA ... 24

10.1 EasyDMA array list ... 25

11 NVMC — Non-volatile memory controller ... 26

11.1 Writing to Flash ... 26
11.2 Erasing a page in Flash ... 26
11.3 Writing to user information configuration registers (UICR) ... 26
11.4 Erasing user information configuration registers (UICR) ... 26
11.5 Erase all ... 27
11.6 Cache ... 27
11.7 Registers ... 27
11.8 Electrical Specification ... 30

12 BPROT — Block protection ... 31

12.1 Registers ... 31

13 FICR — Factory information configuration registers ... 41

13.1 Registers ... 41

14 UICR — User information configuration registers ... 52

14.1 Registers ... 52

15 Peripheral interface ... 66

15.1 Peripheral ID ... 66
15.2 Peripherals with shared ID ... 66
15.3 Peripheral registers ... 67
15.4 Bit set and clear ... 67
15.5 Tasks ... 67
15.6 Events ... 68
15.7 Shortcuts ... 68
15.8 Interrupts ... 68

16 Debug and trace....70
16.1 DAP - Debug Access Port....70
16.2 CTRL-AP - Control Access Port....71
16.3 Debug interface mode....72
16.4 Real-time debug....72
16.5 Trace....73

17 Power and clock management....74
17.1 Current consumption scenarios....74
18 POWER — Power supply....76
18.1 Regulators....76
18.2 System OFF mode....77
18.3 System ON mode....78
18.4 Power supply supervisor....78
18.5 RAM sections....79
18.6 Reset....80
18.7 Retained registers....80
18.8 Reset behavior....81
18.9 Registers....81
18.10 Electrical Specification....97
19 CLOCK — Clock control....98
19.1 HFCLK clock controller....98
19.2 LFCLK clock controller....100
19.3 Registers....101
19.4 Electrical Specification....105
20 GPIO — General purpose input/output....107
20.1 Pin configuration....107
20.2 Notes on usage and restrictions....109
20.3 Registers....110
20.4 Electrical Specification....151
21 GPIOTE — GPIO tasks and events....154
21.1 Pin events and tasks....154
21.2 Port event....155
21.3 Tasks and events pin configuration....155
21.4 Registers....155
21.5 Electrical Specification....164
22 PPI — Programmable peripheral interconnect....165
22.1 Pre-programmed channels....166
22.2 Registers....166
23 RADIO — 2.4 GHz Radio....201
23.1 EasyDMA....201
23.2 Packet configuration....202
23.3 Maximum packet length....203
23.4 Address configuration....203
23.5 Data whitening....203
23.6 CRC....204
23.7 Radio states....205
23.8 Transmit sequence....205
23.9 Receive sequence....207
23.10 Received Signal Strength Indicator (RSSI)....208
23.11 Interframe spacing....208
23.12 Device address match....209
23.13 Bit counter....209
23.14 Registers....210
23.15 Electrical Specification....226
24 TIMER — Timer/counter....230

24.1 Capture....231
24.2 Compare....231
24.3 Task delays....231
24.4 Task priority....231
24.5 Registers....231
24.6 Electrical Specification....237
25 RTC — Real-time counter....238
25.1 Clock source....238
25.2 Resolution versus overflow and the PRESCALER....238
25.3 COUNTER register....239
25.4 Overflow features....239
25.5 TICK event....240
25.6 Event control feature....240
25.7 Compare feature....240
25.8 TASK and EVENT jitter/delay....242
25.9 Reading the COUNTER register....244
25.10 Registers....244
25.11 Electrical Specification....250
26 RNG — Random number generator....251
26.1 Bias correction....251
26.2 Speed....251
26.3 Registers....251
26.4 Electrical Specification....253
27 TEMP — Temperature sensor....254
27.1 Registers....254
27.2 Electrical Specification....259
28 ECB — AES electronic codebook mode encryption....260
28.1 Shared resources....260
28.2 EasyDMA....260
28.3 ECB data structure....260
28.4 Registers....260
28.5 Electrical Specification....262
29 CCM — AES CCM mode encryption....263
29.1 Shared resources....264
29.2 Encryption....264
29.3 Decryption....264
29.4 AES CCM and RADIO concurrent operation....265
29.5 Encrypting packets on-the-fly in radio transmit mode....265
29.6 Decrypting packets on-the-fly in radio receive mode....266
29.7 CCM data structure....267
29.8 EasyDMA and ERROR event....268
29.9 Registers....268
30 AAR — Accelerated address resolver....272
30.1 Shared resources....272
30.2 EasyDMA....272
30.3 Resolving a resolvable address....272
30.4 Use case example for chaining RADIO packet reception with address resolution using AAR....273
30.5 IRK data structure....273
30.6 Registers....274
30.7 Electrical Specification....276
31 SPIM — Serial peripheral interface master with EasyDMA....277
31.1 Shared resources....277
31.2 EasyDMA....278
31.3 SPI master transaction sequence....279
31.4 Low power....280
31.5 Master mode pin configuration....280

31.6 Registers.... 281
31.7 Electrical Specification.... 286
32 SPIS — Serial peripheral interface slave with EasyDMA.... 288
32.1 Shared resources.... 288
32.2 EasyDMA.... 289
32.3 SPI slave operation.... 289
32.4 Slave mode pin configuration.... 290
32.5 Registers.... 291
32.6 Electrical Specification.... 299
33 TWIM — I^2C compatible two-wire interface master with EasyDMA.... 301
33.1 Shared resources.... 302
33.2 EasyDMA.... 302
33.3 Master write sequence.... 303
33.4 Master read sequence.... 304
33.5 Master repeated start sequence.... 305
33.6 Low power.... 306
33.7 Master mode pin configuration.... 306
33.8 Registers.... 306
33.9 Electrical Specification.... 313
34 TWIS — I^2C compatible two-wire interface slave with EasyDMA.... 315
34.1 Shared resources.... 317
34.2 EasyDMA.... 317
34.3 TWI slave responding to a read command.... 317
34.4 TWI slave responding to a write command.... 318
34.5 Master repeated start sequence.... 319
34.6 Terminating an ongoing TWI transaction.... 320
34.7 Low power.... 320
34.8 Slave mode pin configuration.... 320
34.9 Registers.... 321
34.10 Electrical Specification.... 327
35 UARTE — Universal asynchronous receiver/transmitter with EasyDMA.... 329
35.1 Shared resources.... 329
35.2 EasyDMA.... 329
35.3 Transmission.... 330
35.4 Reception.... 330
35.5 Error conditions.... 332
35.6 Using the UARTE without flow control.... 332
35.7 Parity configuration.... 332
35.8 Low power.... 332
35.9 Pin configuration.... 333
35.10 Registers.... 333
35.11 Electrical Specification.... 341
36 QDEC — Quadrature decoder.... 342
36.1 Sampling and decoding.... 342
36.2 LED output.... 343
36.3 Debounce filters.... 343
36.4 Accumulators.... 344
36.5 Output/input pins.... 344
36.6 Pin configuration.... 344
36.7 Registers.... 345
36.8 Electrical Specification.... 351
37 SAADC — Successive approximation analog-to-digital converter.... 352
37.1 Shared resources.... 352
37.2 Overview.... 352
37.3 Digital output.... 353
37.4 Analog inputs and channels.... 354
37.5 Operation modes.... 354

37.6 EasyDMA....356
37.7 Resistor ladder....357
37.8 Reference....358
37.9 Acquisition time....358
37.10 Limits event monitoring....359
37.11 Registers....360
37.12 Electrical Specification....384
37.13 Performance factors....386
38 COMP — Comparator....387
38.1 Shared resources....388
38.2 Differential mode....388
38.3 Single-ended mode....389
38.4 Pin configuration....391
38.5 Registers....391
38.6 Electrical Specification....396
39 LPCOMP — Low power comparator....398
39.1 Shared resources....399
39.2 Pin configuration....399
39.3 Registers....400
39.4 Electrical Specification....404
40 WDT — Watchdog timer....405
40.1 Reload criteria....405
40.2 Temporarily pausing the watchdog....405
40.3 Watchdog reset....405
40.4 Registers....406
40.5 Electrical Specification....410
41 SWI — Software interrupts....411
41.1 Registers....411
42 NFCT — Near field communication tag....412
42.1 Overview....412
42.2 Pin configuration....414
42.3 EasyDMA....414
42.4 Collision resolution....415
42.5 Frame timing controller....416
42.6 Frame assembler....416
42.7 Frame disassembler....417
42.8 Antenna interface....418
42.9 NFCT antenna recommendations....418
42.10 Battery protection....419
42.11 References....419
42.12 Registers....420
42.13 Electrical Specification....431
43 PDM — Pulse density modulation interface....432
43.1 Master clock generator....432
43.2 Module operation....432
43.3 Decimation filter....433
43.4 EasyDMA....433
43.5 Hardware example....434
43.6 Pin configuration....434
43.7 Registers....435
43.8 Electrical Specification....439
44 I^2S — Inter-IC sound interface....441
44.1 Mode....441
44.2 Transmitting and receiving....441
44.3 Left right clock (LRCK)....442
44.4 Serial clock (SCK)....442
44.5 Master clock (MCK)....443

44.6 Width, alignment and format....443
44.7 EasyDMA....445
44.8 Module operation....447
44.9 Pin configuration....448
44.10 Registers....449
44.11 Electrical Specification....456
45 MWU — Memory watch unit....457
45.1 Registers....457
46 EGU — Event generator unit....484
46.1 Registers....484
46.2 Electrical Specification....490
47 PWM — Pulse width modulation....491
47.1 Wave counter....491
47.2 Decoder with EasyDMA....494
47.3 Limitations....499
47.4 Pin configuration....499
47.5 Registers....500
47.6 Electrical Specification....508
48 SPI — Serial peripheral interface master....509
48.1 Functional description....509
48.2 Registers....512
48.3 Electrical Specification....514
49 TWI — I^2C compatible two-wire interface....516
49.1 Functional description....516
49.2 Master mode pin configuration....516
49.3 Shared resources....517
49.4 Master write sequence....517
49.5 Master read sequence....518
49.6 Master repeated start sequence....519
49.7 Low power....520
49.8 Registers....520
49.9 Electrical Specification....524
50 UART — Universal asynchronous receiver/transmitter....526
50.1 Functional description....526
50.2 Pin configuration....526
50.3 Shared resources....527
50.4 Transmission....527
50.5 Reception....527
50.6 Suspending the UART....528
50.7 Error conditions....528
50.8 Using the UART without flow control....529
50.9 Parity configuration....529
50.10 Registers....529
50.11 Electrical Specification....534
51 Mechanical specifications....535
51.1 QFN48 6 x 6 mm package....535
52 Ordering information....536
52.1 IC marking....536
52.2 Box labels....536
52.3 Order code....537
52.4 Code ranges and values....537
52.5 Product options....538
53 Reference circuitry....539
53.1 Schematic QFAA QFN48 with internal LDO setup....539
53.2 Schematic QFAA QFN48 with DC/DC regulator setup....540
53.3 Schematic QFAA QFN48 with DC/DC regulator and NFC setup....541
53.4 PCB guidelines....541

53.5 PCB layout example..... 542

54 Liability disclaimer.....544

54.1 Life support applications..... 544

1 Revision history

Date	Version	Description
February 2016	1.0	First release.

2 About this document

This Product Specification is organized into chapters based on the modules and peripherals that are available in this IC.

The peripheral descriptions are broken into separate sections that include the following information:

- A detailed functional description of the peripheral.
- Register configuration for the peripheral
- Electrical specification tables providing the specified limits of the chip when tested under the conditions defined in the *Recommended operating conditions* on page 17

2.1 Peripheral naming and abbreviations

Every peripheral has a unique capitalized name or an abbreviation of its name, e.g. TIMER, used for identification and reference. This name is used in chapter headings and references, and it will appear in the ARM® Cortex® Microcontroller Software Interface Standard (CMSIS) hardware abstraction layer to identify the peripheral.

The peripheral instance name, which is different from the peripheral name, is constructed using the peripheral name followed by a numbered postfix, starting with 0, for example, TIMER0. A postfix is normally only used if a peripheral can be instantiated more than once. The peripheral instance name is also used in the CMSIS to identify the peripheral instance.

2.2 Register tables

Individual registers are described using register tables. These tables are built up of two sections. The first three colored rows describe the position and size of the different fields in the register. The following rows describe the fields in more detail.

2.2.1 Fields and values

The **Id (Field Id)** row specifies the bits that belong to the different fields in the register.

A blank space means that the field is reserved and that it is read as undefined, and must be written as ‘0’ to secure forward compatibility. If a register is divided into more than one field, a unique field name is specified for each field in the **Field** column.

If a field has enumerated values, then every value will be identified with a unique value id in the **Value Id** column. Single-bit bit fields may, however, omit the **Value Id** when values can be substituted with a Boolean type enumerator range, for example, True/False, Disable/Enable, On/Off, and so on.

Values are usually provided as decimal or hexadecimal. Hex values have a '0x' prefix, decimal values have no prefix.

The **Value** column can be populated in the following ways:

- Individual enumerated values, for example, 1, 3, 9.
- Range of values, e.g. [0..4], that is, all values from and including 0 and 4.
- Implicit values. If no values are indicated in the **Value** column, all bit combinations are supported, or alternatively the field’s translation and limitations are described in the text instead.

If two or more fields are closely related, the **Value Id**, **Value**, and **Description** may be omitted for all but the first field. Subsequent fields will indicate inheritance with “..”.

When an item is marked with the word **Deprecated**, it means this is an attribute applied to a feature to indicate that it should not be used for new designs.

2.3 Registers

Table 1: Register Overview

Register	Offset	Description
DUMMY	0x514	Example of a register controlling a dummy feature

2.3.1 DUMMY

Address offset: 0x514

Example of a register controlling a dummy feature

Bit number	31	30	29	28	27	26	25	24	23	22	21	20	19	18	17	16	15	14	13	12	11	10	9	8	7	6	5	4	3	2	1	0
Id					D	D	D	D						C	C	C								B							A	A
Reset 0x00050002	**0**	**0**	**0**	**0**	**0**	**0**	**0**	**0**	**0**	**0**	**0**	**0**	**0**	**1**	**0**	**1**	**0**	**0**	**0**	**0**	**0**	**0**	**0**	**0**	**0**	**0**	**0**	**0**	**0**	**0**	**1**	**0**

Id	RW	Field	Value Id	Value	Description	
A	RW	FIELD_A			Example of a field with several enumerated values	
			Disabled	0	The example feature is disabled	
			NormalMode	1	The example feature is enabled in normal mode	
			ExtendedMode	2	The example feature is enabled along with extra functionality	
B	RW	FIELD_B			Example of a deprecated field	Deprecated
			Disabled	0	The override feature is disabled	
			Enabled	1	The override feature is enabled	
C	RW	FIELD_C			Example of a field with a valid range of values	
			ValidRange	[2..7]	Example of allowed values for this field	
D	RW	FIELD_D			Example of a field with no restriction on the values	

3 Block diagram

This block diagram illustrates the overall system. Arrows with white heads indicate signals that share physical pins with other signals.

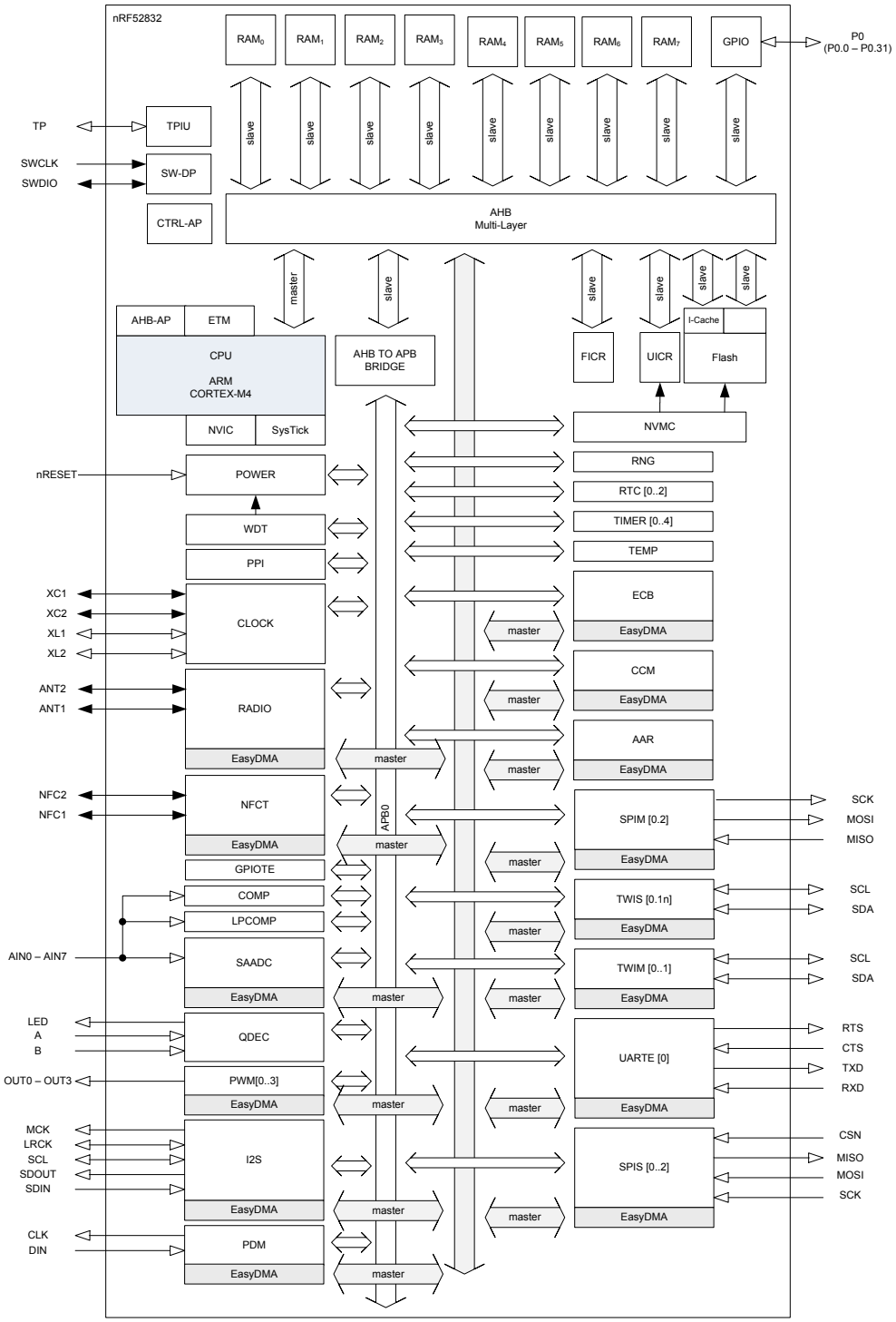

Figure 1: Block diagram

4 Pin assignments

Here we cover the pin assignments for each variant of the chip.

4.1 QFN48 pin assignments

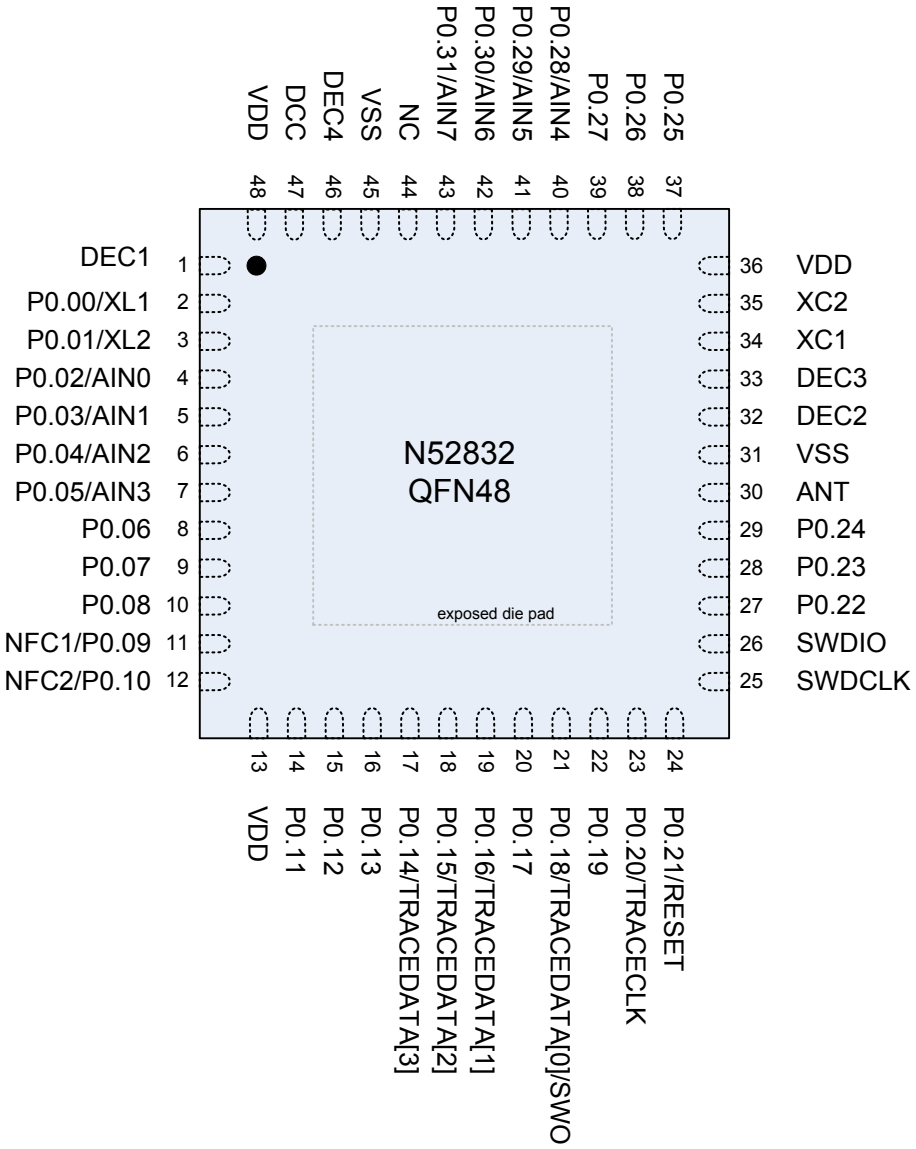

Figure 2: QFN48 pin assignments, top view

Table 2: QFN48 pin assignments

Pin	Name	Type	Description
Left Side of chip			
1	DEC1	Power	0V9 regulator digital supply decoupling.
2	P0.00	Digital I/O	General purpose I/O pin.
	XL1	Analog input	Connection for 32.768 kHz crystal (LFXO).
3	P0.01	Digital I/O	General purpose I/O pin.

Pin	Name	Type	Description
	XL2	Analog input	Connection for 32.768 kHz crystal (LFXO).
4	P0.02	Digital I/O	General purpose I/O pin.
	AIN0	Analog input	SAADC/COMP/LPCOMP input.
5	P0.03	Digital I/O	General purpose I/O pin.
	AIN1	Analog input	SAADC/COMP/LPCOMP input.
6	P0.04	Digital I/O	General purpose I/O pin.
	AIN2	Analog input	SAADC/COMP/LPCOMP input.
7	P0.05	Digital I/O	General purpose I/O pin.
	AIN3	Analog input	SAADC/COMP/LPCOMP input.
8	P0.06	Digital I/O	General purpose I/O pin.
9	P0.07	Digital I/O	General purpose I/O pin.
10	P0.08	Digital I/O	General purpose I/O pin.
11	NFC1	NFC input	NFC antenna connection.
	P0.09	Digital I/O	General purpose I/O pin[1]
12	NFC2	NFC input	NFC antenna connection.
	P0.10	Digital I/O	General purpose I/O pin[1]
Bottom side of chip			
13	VDD	Power	Power-supply pin.
14	P0.11	Digital I/O	General purpose I/O pin.
15	P0.12	Digital I/O	General purpose I/O pin.
16	P0.13	Digital I/O	General purpose I/O pin.
17	P0.14	Digital I/O	General purpose I/O pin.
	TRACEDATA[3]		Trace port output.
18	P0.15	Digital I/O	General purpose I/O pin.
	TRACEDATA[2]		Trace port output.
19	P0.16	Digital I/O	General purpose I/O pin.
	TRACEDATA[1]		Trace port output.
20	P0.17	Digital I/O	General purpose I/O pin.
21	P0.18	Digital I/O	General purpose I/O pin.
	TRACEDATA[0] / SWO		Single Wire Output. Trace port output.
22	P0.19	Digital I/O	General purpose I/O pin.
23	P0.20	Digital I/O	General purpose I/O pin.
	TRACECLK		Trace port clock output.
24	P0.21	Digital I/O	General purpose I/O pin.
	RESET		Configurable as pin reset.
Right Side of chip			
25	SWDCLK	Digital input	Serial Wire Debug clock input for debug and programming.
26	SWDIO	Digital I/O	Serial Wire Debug I/O for debug and programming.
27	P0.22	Digital I/O	General purpose I/O pin[2]
28	P0.23	Digital I/O	General purpose I/O pin[2]
29	P0.24	Digital I/O	General purpose I/O pin[2]
30	ANT	RF	Single-ended radio antenna connection.
31	VSS	Power	Ground pin (Radio supply).
32	DEC2	Power	1V3 regulator supply decoupling (Radio supply).
33	DEC3	Power	Power supply decoupling.
34	XC1	Analog input	Connection for 32 MHz crystal.
35	XC2	Analog input	Connection for 32 MHz crystal.
36	VDD	Power	Power-supply pin.
Top side of chip			

Pin	Name	Type	Description
37	P0.25	Digital I/O	General purpose I/O pin[2]
38	P0.26	Digital I/O	General purpose I/O pin[2]
39	P0.27	Digital I/O	General purpose I/O pin[2]
40	P0.28	Digital I/O	General purpose I/O pin[2]
	AIN4	Analog input	SAADC/COMP/LPCOMP input.
41	P0.29	Digital I/O	General purpose I/O pin[2]
	AIN5	Analog input	SAADC/COMP/LPCOMP input.
42	P0.30	Digital I/O	General purpose I/O pin[2]
	AIN6	Analog input	SAADC/COMP/LPCOMP input.
43	P0.31	Digital I/O	General purpose I/O pin[2]
	AIN7	Analog input	SAADC/COMP/LPCOMP input.
44	NC		No connect pin. Leave unconnected.
45	VSS	Power	Ground pin.
46	DEC4	Power	1V3 regulator supply decoupling. Input from DC/DC regulator. Output from 1.3 V LDO.
47	DCC	Power	DC/DC regulator output pin.
48	VDD	Power	Power-supply pin.
Bottom of chip			
Die pad	VSS	Power	Ground pad. Exposed die pad must be connected to ground (VSS) for proper device operation.

[1] See *NFC antenna pins* on page 110 for more information.
[2] See *GPIO located near the radio* on page 109 for more information.

5 Absolute maximum ratings

Maximum ratings are the extreme limits to which the chip can be exposed for a limited amount of time without permanently damaging it. Exposure to absolute maximum ratings for prolonged periods of time may affect the reliability of the device.

Table 3: Absolute maximum ratings

	Note	Min.	Max.	Unit
Supply voltages				
VDD		-0.3	+3.9	V
VSS			0	V
I/O pin voltage				
$V_{I/O}$, VDD ≤3.6 V		-0.3	VDD + 0.3 V	V
$V_{I/O}$, VDD >3.6 V		-0.3	3.9 V	V
NFC antenna pin current				
$I_{NFC1/2}$			80	mA
Radio				
RF input level			10	dBm
Environmental (QFN package)				
Storage temperature		-40	+125	°C
MSL	Moisture Sensitivity Level		2	
ESD HBM	Human Body Model		4	kV
ESD CDM_{QF}	Charged Device Model (QFN48, 6x6 mm package)		750	V
Flash memory				
Endurance		10 000		Write/erase cycles
Retention		10 years at 40°C		

6 Recommended operating conditions

The operating conditions are the physical parameters that the chip can operate within.

Table 4: Recommended operating conditions

Symbol	Parameter	Notes	Min.	Nom.	Max.	Units
VDD	Supply voltage, independent of DCDC enable		1.7	3.0	3.6	V
t_{R_VDD}	Supply rise time (0 V to 1.7 V)				60	ms
TA	Operating temperature		-40	25	85	°C

Important: The on-chip power-on reset circuitry may not function properly for rise times longer than the specified maximum.

7 CPU

The ARM® Cortex®-M4 processor with floating-point unit (FPU) has a 32-bit instruction set (Thumb®-2 technology) that implements a superset of 16 and 32-bit instructions to maximize code density and performance.

This processor implements several features that enable energy-efficient arithmetic and high-performance signal processing including:

- Digital signal processing (DSP) instructions
- Single-cycle multiply and accumulate (MAC) instructions
- Hardware divide
- 8 and 16-bit single instruction multiple data (SIMD) instructions
- Single-precision floating-point unit (FPU)

The ARM Cortex Microcontroller Software Interface Standard (CMSIS) hardware abstraction layer for the ARM Cortex processor series is implemented and available for the M4 CPU.

Real-time execution is highly deterministic in thread mode, to and from sleep modes, and when handling events at configurable priority levels via the Nested Vectored Interrupt Controller (NVIC).

Executing code from flash will have a wait state penalty on the nRF52 Series. An instruction cache can be enabled to minimize flash wait states when fetching instructions. For more information on cache, see *Cache* on page 27. The section *Electrical Specification* on page 18 shows CPU performance parameters including wait states in different modes, CPU current and efficiency, and processing power and efficiency based on the CoreMark® benchmark.

7.1 Floating point interrupt

The floating point unit (FPU) may generate exceptions when used due to e.g. overflow or underflow. These exceptions will trigger the FPU interrupt (see *Instantiation* on page 21). To clear the IRQ line when an exception has occurred, the relevant exception bit within the FPSCR register needs to be cleared. For more information about the FPSCR or other FPU registers, see *Cortex-M4 Devices Generic User Guide*.

7.2 Electrical Specification

7.2.1 CPU performance

The CPU clock speed is 64 MHz. Current and efficiency data is taken when in System ON and the CPU is executing the CoreMark™ benchmark. It includes power regulator and clock base currents. All other blocks are IDLE.

Symbol	Description	Min.	Typ.	Max.	Units
W_{FLASH}	CPU wait states, running from flash, cache disabled	0		2	
$W_{FLASHCACHE}$	CPU wait states, running from flash, cache enabled	0		3	
W_{RAM}	CPU wait states, running from RAM			0	
$I_{DDFLASHCACHE}$	CPU current, running from flash, cache enabled, LDO		7.4		mA
$I_{DDFLASHCACHEDCDC}$	CPU current, running from flash, cache enabled, DCDC 3V		3.7		mA
$I_{DDFLASH}$	CPU current, running from flash, cache disabled, LDO		8.0		mA
$I_{DDFLASHDCDC}$	CPU current, running from flash, cache disabled, DCDC 3V		3.9		mA
I_{DDRAM}	CPU current, running from RAM, LDO		6.7		mA
$I_{DDRAMDCDC}$	CPU current, running from RAM, DCDC 3V		3.3		mA
$I_{DDFLASH/MHz}$	CPU efficiency, running from flash, cache enabled, LDO		125		µA/MHz
$I_{DDFLASHDCDC/MHz}$	CPU efficiency, running from flash, cache enabled, DCDC 3V		58		µA/MHz

Symbol	Description	Min.	Typ.	Max.	Units
CM_{FLASH}	CoreMark[3], running from flash, cache enabled		215		CoreM
$CM_{FLASH/MHz}$	CoreMark per MHz, running from flash, cache enabled		3.36		CoreM MHz
$CM_{FLASH/mA}$	CoreMark per mA, running from flash, cache enabled, DCDC 3V		58		CoreM mA

7.3 CPU and support module configuration

The ARM® Cortex®-M4 processor has a number of CPU options and support modules implemented on the device.

Option / Module	Description	Implemented
Core options		
NVIC	Nested Vector Interrupt Controller	37 vectors
PRIORITIES	Priority bits	3
WIC	Wakeup Interrupt Controller	NO
Endianness	Memory system endianness	Little endian
Bit Banding	Bit banded memory	NO
DWT	Data Watchpoint and Trace	YES
SysTick	System tick timer	YES
Modules		
MPU	Memory protection unit	YES
FPU	Floating point unit	YES
DAP	Debug Access Port	YES
ETM	Embedded Trace Macrocell	YES
ITM	Instrumentation Trace Macrocell	YES
TPIU	Trace Port Interface Unit	YES
ETB	Embedded Trace Buffer	NO
FPB	Flash Patch and Breakpoint Unit	YES
HTM	AHB Trace Macrocell	NO

[3] Using IAR v6.50.1.4452 with flags --endian=little --cpu=Cortex-M4 -e --fpu=VFPv4_sp –Ohs --no_size_constraints

8 Memory

The nRF52832 contains Flash and RAM that can be used for code and data storage.

The amount of RAM and Flash will vary depending on variant, see *Table 5: Memory variants* on page 20.

Table 5: Memory variants

Device name	RAM	Flash	Comments
nRF52832	64 kByte	512 kByte	

The CPU and the EasyDMA can access memory via the AHB multilayer interconnect. The CPU is also able to access peripherals via the AHB multilayer interconnect, as illustrated in *Figure 3: Memory layout* on page 20.

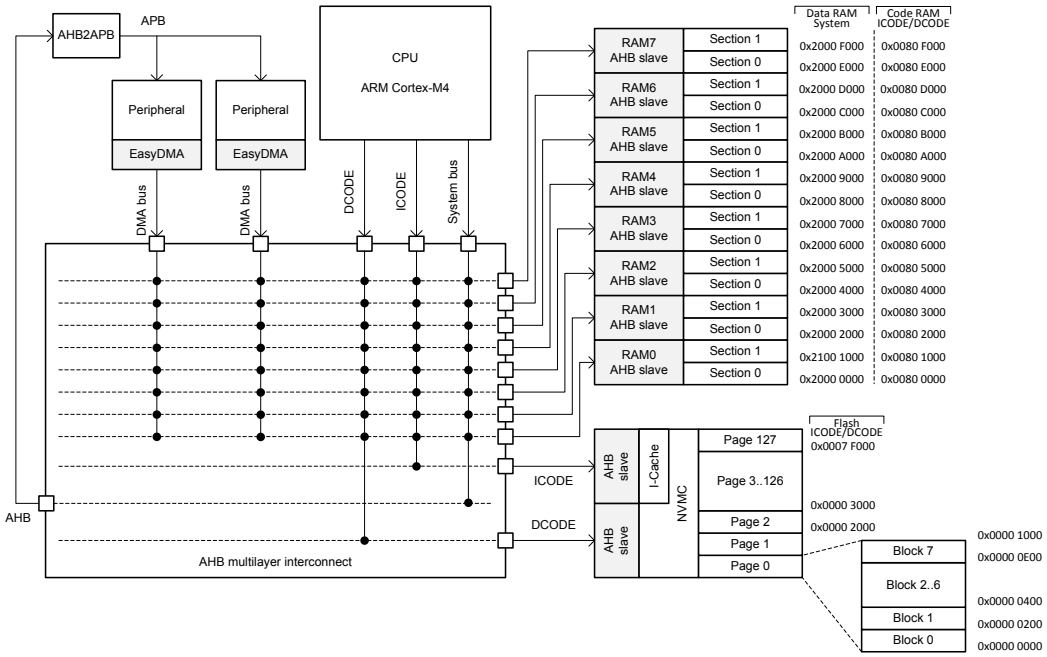

Figure 3: Memory layout

See *AHB multilayer* on page 23 and *EasyDMA* on page 24 for more information about the AHB multilayer interconnect and the EasyDMA.

The same physical RAM is mapped to both the Data RAM region and the Code RAM region. It is up to the application to partition the RAM within these regions so that one does not corrupt the other.

8.1 RAM - Random access memory

The RAM interface is divided into multiple RAM AHB slaves.

Each RAM AHB slave is connected to two 4-kilobyte RAM sections, see Section 0 and Section 1 in *Figure 3: Memory layout* on page 20.

Each of the RAM sections have separate power control for System ON and System OFF mode operation, which is configured via RAM register (see the *POWER — Power supply* on page 76).

8.2 Flash - Non-volatile memory

The Flash can be read an unlimited number of times by the CPU, but it has restrictions on the number of times it can be written and erased and also on how it can be written.

Writing to Flash is managed by the Non-volatile memory controller (NVMC), see *NVMC — Non-volatile memory controller* on page 26.

The Flash is divided into multiple pages that can be accessed by the CPU via both the ICODE and DCODE buses as shown in, *Figure 3: Memory layout* on page 20. Each page is divided into 8 blocks.

8.3 Memory map

The complete memory map is shown in *Figure 4: Memory map* on page 21. As described in *Memory* on page 20, Code RAM and the Data RAM are the same physical RAM.

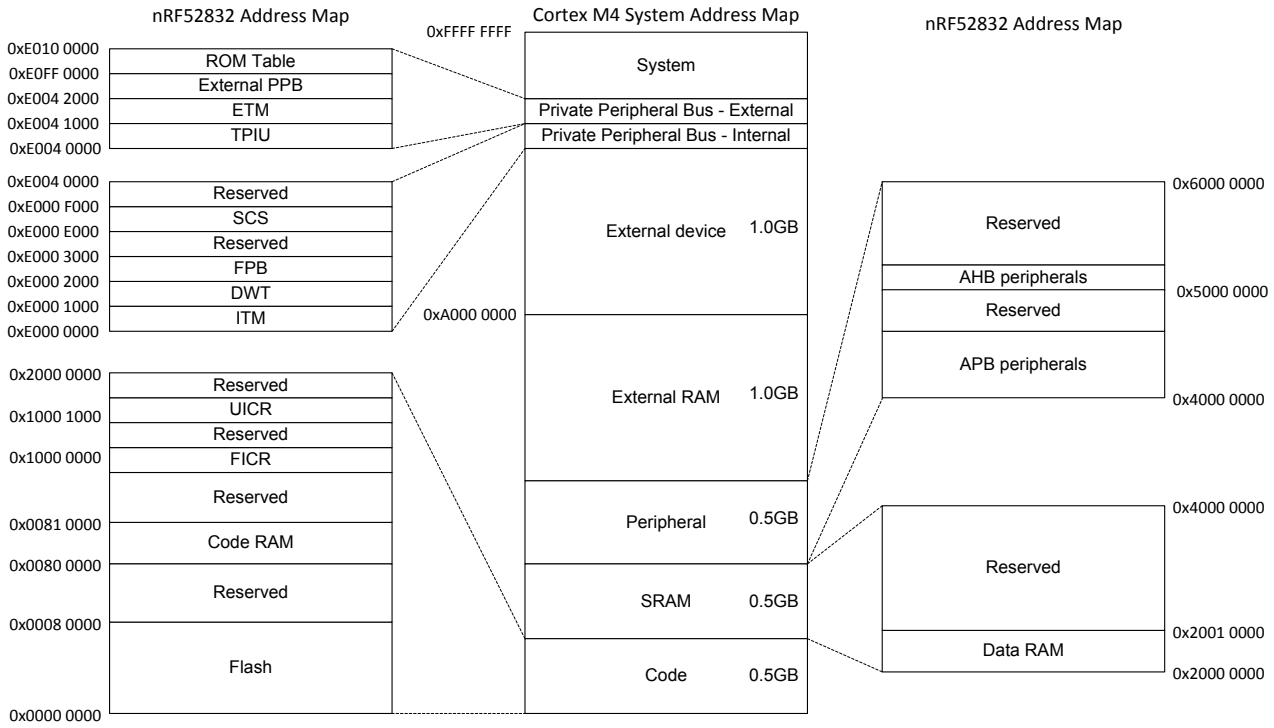

Figure 4: Memory map

8.4 Instantiation

Table 6: Instantiation table

ID	Base Address	Peripheral	Instance	Description	
0	0x40000000	CLOCK	CLOCK	Clock control	
0	0x40000000	POWER	POWER	Power Control	
0	0x40000000	BPROT	BPROT	Block Protect	
1	0x40001000	RADIO	RADIO	2.4 GHz radio	
2	0x40002000	UART	UART0	Universal Asynchronous Receiver/Transmitter	Deprecated
2	0x40002000	UARTE	UARTE0	Universal Asynchronous Receiver/Transmitter with EasyDMA	
3	0x40003000	TWIM	TWIM0	Two-wire interface master 0	
3	0x40003000	TWIS	TWIS0	Two-wire interface slave 0	
3	0x40003000	SPIM	SPIM0	SPI master 0	
3	0x40003000	SPIS	SPIS0	SPI slave 0.	
3	0x40003000	SPI	SPI0	SPI master 0	Deprecated
3	0x40003000	TWI	TWI0	Two-wire interface master 0	Deprecated
4	0x40004000	SPI	SPI1	SPI master 1	Deprecated
4	0x40004000	TWIS	TWIS1	Two-wire interface slave 1	
4	0x40004000	SPIM	SPIM1	SPI master 1	
4	0x40004000	TWI	TWI1	Two-wire interface master 1	Deprecated

ID	Base Address	Peripheral	Instance	Description	
4	0x40004000	TWIM	TWIM1	Two-wire interface master 1	
4	0x40004000	SPIS	SPIS1	SPI slave 1	
5	0x40005000	NFCT	NFCT	Near Field Communication Tag	
6	0x40006000	GPIOTE	GPIOTE	GPIO tasks and events	
7	0x40007000	SAADC	SAADC	Analog to digital converter	
8	0x40008000	TIMER	TIMER0	Timer 0	
9	0x40009000	TIMER	TIMER1	Timer 1	
10	0x4000A000	TIMER	TIMER2	Timer 2	
11	0x4000B000	RTC	RTC0	Real-time counter 0	
12	0x4000C000	TEMP	TEMP	Temperature Sensor	
13	0x4000D000	RNG	RNG	Random Number Generator	
14	0x4000E000	ECB	ECB	AES ECB Mode Encryption	
15	0x4000F000	CCM	CCM	AES CCM Mode Encryption	
15	0x4000F000	AAR	AAR	Accelerated Address Resolver	
16	0x40010000	WDT	WDT	Watchdog Timer	
17	0x40011000	RTC	RTC1	Real-time counter 1	
18	0x40012000	QDEC	QDEC	Quadrature decoder	
19	0x40013000	LPCOMP	LPCOMP	Low power comparator	
19	0x40013000	COMP	COMP	General Purpose Comparator	
20	0x40014000	EGU	EGU0	Event Generator Unit 0	
20	0x40014000	SWI	SWI0	Software interrupt 0	
21	0x40015000	SWI	SWI1	Software interrupt 1	
21	0x40015000	EGU	EGU1	Event Generator Unit 1	
22	0x40016000	SWI	SWI2	Software interrupt 2	
22	0x40016000	EGU	EGU2	Event Generator Unit 2	
23	0x40017000	SWI	SWI3	Software interrupt 3	
23	0x40017000	EGU	EGU3	Event Generator Unit 3	
24	0x40018000	EGU	EGU4	Event Generator Unit 4	
24	0x40018000	SWI	SWI4	Software interrupt 4	
25	0x40019000	SWI	SWI5	Software interrupt 5	
25	0x40019000	EGU	EGU5	Event Generator Unit 5	
26	0x4001A000	TIMER	TIMER3	Timer 3	
27	0x4001B000	TIMER	TIMER4	Timer 4	
28	0x4001C000	PWM	PWM0	Pulse Width Modulation Unit 0	
29	0x4001D000	PDM	PDM	Pulse Density Modulation (Digital Microphone) Interface	
30	0x4001E000	NVMC	NVMC	Non Volatile Memory Controller	
31	0x4001F000	PPI	PPI	PPI controller	
32	0x40020000	MWU	MWU	Memory Watch Unit	
33	0x40021000	PWM	PWM1	Pulse Width Modulation Unit 1	
34	0x40022000	PWM	PWM2	Pulse Width Modulation Unit 2	
35	0x40023000	SPI	SPI2	SPI master 2.	Deprecated
35	0x40023000	SPIS	SPIS2	SPI slave 2.	
35	0x40023000	SPIM	SPIM2	SPI master 2.	
36	0x40024000	RTC	RTC2	Real-time counter 2.	
37	0x40025000	I2S	I2S	Inter-IC Sound interface	
38	0x40026000	FPU	FPU	FPU interrupt	
N/A	0x10000000	FICR	FICR	Factory Information Configuration	
N/A	0x10001000	UICR	UICR	User Information Configuration	
N/A	0x50000000	GPIO	P0	General purpose input and output	
N/A	0x50000000	GPIO	GPIO	General purpose input and output	Deprecated

9 AHB multilayer

The CPU and all of the EasyDMAs are AHB bus masters on the AHB multilayer, while the RAM and various other modules are AHB slaves.

See *Figure 1: Block diagram* on page 12 for an overview of which peripherals implement EasyDMA.

The CPU has exclusive access to all AHB slaves except for the RAM that can also be accessed by the EasyDMA.

Access rights to each of the RAM AHB slaves are resolved using the priority of the different bus masters in the system

See *AHB multilayer priorities* on page 23 for information about the priority of the different AHB bus masters in the system. It is possible for two or more bus masters to have the same priority in cases where it is guaranteed by design that the related masters will never be able to access the same slave at the same time.

9.1 AHB multilayer priorities

Each master connected to the AHB multilayer is assigned a priority.

Table 7: AHB bus masters

Bus master name	Priority	Description
CPU	Highest priority	
SPIS1		Applies to SPIM1, SPIS1, TWIM1, TWIS1
RADIO		
CCM/ECB/AAR		
SAADC		
UARTE		
SERIAL0		Applies to SPIM0, SPIS0, TWIM0, TWIS0
SERIAL2		Applies to SPIM2, SPIS2
NFCT		
I2S		I2S
PDM		PDM
PWM	Lowest priority	Applies to PWM0, PWM1, PWM2

10 EasyDMA

EasyDMA is an easy-to-use direct memory access module that some peripherals implement to gain direct access to Data RAM.

The EasyDMA is an AHB bus master similar to the CPU and it is connected to the AHB multilayer interconnect for direct access to the Data RAM. The EasyDMA is not able to access the Flash.

A peripheral can implement multiple EasyDMA instances, for example to provide a dedicated channel for reading data from RAM into the peripheral at the same time as a second channel is dedicated for writing data to the RAM from the peripheral. This concept is illustrated in *Figure 5: EasyDMA example* on page 24

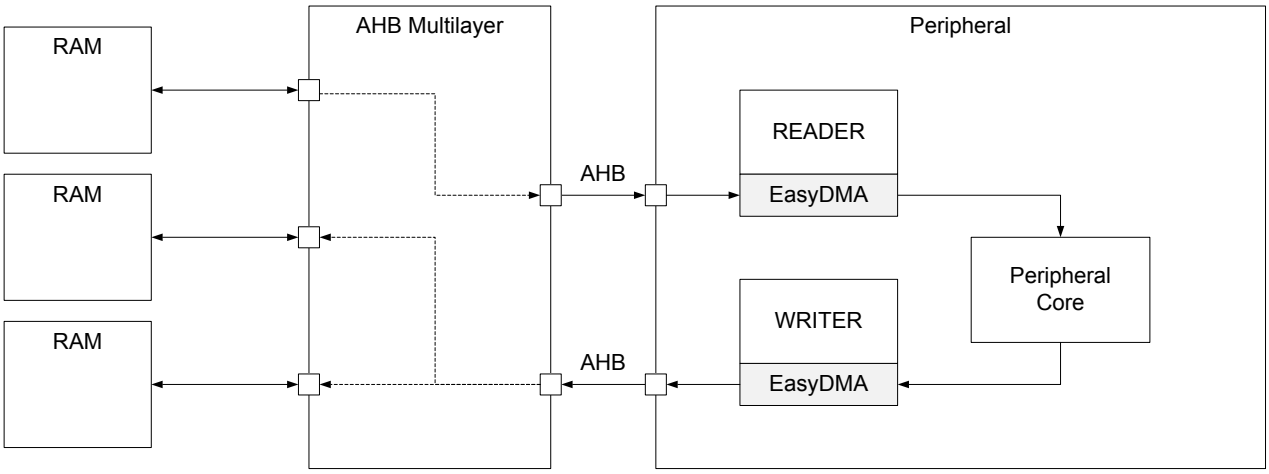

Figure 5: EasyDMA example

An EasyDMA channel is usually exposed to the user in the form illustrated below, but some variations may occur:

```
READERBUFFER_SIZE 5
WRITERBUFFER_SIZE 6

uint8_t readerBuffer[READERBUFFER_SIZE]  __at__ 0x20000000;
uint8_t writerBuffer[WRITERBUFFER_SIZE]  __at__ 0x20000005;

// Configuring the READER channel
MYPERIPHERAL->READER.MAXCNT = READERBUFFER_SIZE;
MYPERIPHERAL->READER.PTR = &readerBuffer;

// Configure the WRITER channel
MYPERIPHERAL->WRITER.MAXCNT = WRITEERBUFFER_SIZE;
MYPERIPHERAL->WRITER.PTR = &writerBuffer;
```

This example shows a peripheral called MYPERIPHERAL that implements two EasyDMA channels, one for reading, called READER, and one for writing, called WRITER. When the peripheral is started, it is here assumed that the peripheral will read 5 bytes from the readerBuffer located in RAM at address 0x20000000, process the data and then write no more than 6 bytes back to the writerBuffer located in RAM at address 0x20000005. The memory layout of these buffers is illustrated in *Figure 6: EasyDMA memory layout* on page 25.

0x20000000	readerBuffer[0]	readerBuffer[1]	readerBuffer[2]	readerBuffer[3]
0x20000004	readerBuffer[4]	writerBuffer[0]	writerBuffer[1]	writerBuffer[2]
0x20000008	writerBuffer[3]	writerBuffer[4]	writerBuffer[5]	

Figure 6: EasyDMA memory layout

The EasyDMA channel's MAXCNT register cannot be specified larger than the actual size of the buffer. If, for example, the WRITER.MAXCNT register is specified larger than the size of the writerBuffer, the WRITER EasyDMA channel may overflow the writerBuffer.

After the peripheral has completed the EasyDMA transfer, the CPU can read the EasyDMA channel's AMOUNT register to see how many bytes that were transferred, e.g. it is possible for the CPU to read the MYPERIPHERAL->WRITER.AMOUNT register to see how many bytes the WRITER wrote to RAM.

10.1 EasyDMA array list

The EasyDMA is able to operate in a mode called array list.

The EasyDMA array list can be represented by the data structure ArrayList_type illustrated in the code example below.

This data structure includes only a buffer with size equal to READER.MAXCNT. EasyDMA will use the READER.MAXCNT register to determine when the buffer is full.

This array list does not provide a mechanism to explicitly specify where the next item in the list is located. Instead, it assumes that the list is organized as a linear array where items are located one after the other in RAM.

```
#define BUFFER_SIZE  4

typedef struct ArrayList
{
  uint8_t buffer[BUFFER_SIZE];
} ArrayList_type;

ArrayList_type ReaderList[3];

READER.MAXCNT = BUFFER_SIZE;
READER.PTR = &ReaderList;
```

READER.PTR = &ReaderList

0x20000000 : ReaderList[0]	buffer[0]	buffer[1]	buffer[2]	buffer[3]
0x20000004 : ReaderList[1]	buffer[0]	buffer[1]	buffer[2]	buffer[3]
0x20000008 : ReaderList[2]	buffer[0]	buffer[1]	buffer[2]	buffer[3]

Figure 7: EasyDMA array list

11 NVMC — Non-volatile memory controller

The Non-volatile memory controller (NVMC) is used for writing and erasing the internal Flash memory and the UICR.

Before a write can be performed, the NVMC must be enabled for writing in CONFIG.WEN. Similarly, before an erase can be performed, the NVMC must be enabled for erasing in CONFIG.EEN, see *CONFIG* on page 28. The user must make sure that writing and erasing are not enabled at the same time. Failing to do so may result in unpredictable behavior.

11.1 Writing to Flash

When writing is enabled, the Flash is written by writing a full 32-bit word to a word-aligned address in the Flash.

The NVMC is only able to write '0' to bits in the Flash that are erased, that is, set to '1'. It cannot write back a bit to '1'.

As illustrated in *Figure 3: Memory layout* on page 20, the Flash is divided into multiple pages that are further divided into multiple blocks. The same block in the Flash can only be written n_{WRITE} number of times before an erase must be performed using *ERASEPAGE* or *ERASEALL*. See the memory size and organization in *Memory* on page 20 for block size.

Only full 32-bit words can be written to Flash using the NVMC interface. To write less than 32 bits to Flash, write the data as a word, and set all the bits that should remain unchanged in the word to '1'. Note that the restriction about the number of writes (see above) still applies in this case.

The time it takes to write a word to the Flash is specified by t_{WRITE} . The CPU is halted while the NVMC is writing to the Flash.

Only word-aligned writes are allowed. Byte or half-word-aligned writes will result in a hard fault.

11.2 Erasing a page in Flash

When erase is enabled, the Flash can be erased page by page using the ERASEPAGE register.

After erasing a Flash page, all bits in the page are set to '1'. The time it takes to erase a page is specified by $t_{ERASEPAGE}$. The CPU is halted while the NVMC performs the erase operation.

11.3 Writing to user information configuration registers (UICR)

User information configuration registers (UICR) are written in the same way as Flash. After UICR has been written, the new UICR configuration will only take effect after a reset.

UICR can only be written n_{WRITE} number of times before an erase must be performed using *ERASEUICR* or *ERASEALL*.

The time it takes to write a word to the UICR is specified by t_{WRITE} . The CPU is halted while the NVMC is writing to the UICR.

11.4 Erasing user information configuration registers (UICR)

When erase is enabled, UICR can be erased using the ERASEUICR register.

After erasing UICR all bits in UICR are set to '1'. The time it takes to erase UICR is specified by $t_{ERASEPAGE}$. The CPU is halted while the NVMC performs the erase operation.

11.5 Erase all

When erase is enabled, the whole Flash and UICR can be erased in one operation by using the ERASEALL register. ERASEALL will not erase the factory information configuration registers (FICR).

The time it takes to perform an ERASEALL command is specified by $t_{ERASEALL}$. The CPU is halted while the NVMC performs the erase operation.

11.6 Cache

An instruction cache (I-Cache) can be enabled for the ICODE bus in the NVMC.

See the Memory map in *Memory map* on page 21 for the location of Flash.

A cache hit is an instruction fetch from the cache, and it has a 0 wait-state delay. The number of wait-states for a cache miss, where the instruction is not available in the cache and needs to be fetched from Flash, depends on the processor frequency and is shown in *CPU* on page 18

Enabling the cache can increase CPU performance and reduce power consumption by reducing the number of wait cycles and the number of flash accesses. This will depend on the cache hit rate. Cache will use some current when enabled. If the reduction in average current due to reduced flash accesses is larger than the cache power requirement, the average current to execute the program code will reduce.

When disabled, the cache does not use current and does not retain its content.

It is possible to enable cache profiling to analyze the performance of the cache for your program using the *ICACHECNF* register. When profiling is enabled, the *IHIT* and *IMISS* registers are incremented for every instruction cache hit or miss respectively. The hit and miss profiling registers do not wrap around after reaching the maximum value. If the maximum value is reached, consider profiling for a shorter duration to get correct numbers.

11.7 Registers

Table 8: Instances

Base address	Peripheral	Instance	Description	Configuration
0x4001E000	NVMC	NVMC	Non Volatile Memory Controller	

Table 9: Register Overview

Register	Offset	Description	
READY	0x400	Ready flag	
CONFIG	0x504	Configuration register	
ERASEPAGE	0x508	Register for erasing a page in Code area	
ERASEPCR1	0x508	Register for erasing a page in Code area. Equivalent to ERASEPAGE.	Deprecated
ERASEALL	0x50C	Register for erasing all non-volatile user memory	
ERASEPCR0	0x510	Register for erasing a page in Code area. Equivalent to ERASEPAGE.	Deprecated
ERASEUICR	0x514	Register for erasing User Information Configuration Registers	
ICACHECNF	0x540	I-Code cache configuration register.	
IHIT	0x548	I-Code cache hit counter.	
IMISS	0x54C	I-Code cache miss counter.	

11.7.1 READY

Address offset: 0x400

Ready flag

Bit number				31	30	29	28	27	26	25	24	23	22	21	20	19	18	17	16	15	14	13	12	11	10	9	8	7	6	5	4	3	2	1	0
Id																																			A
Reset 0x00000000				**0**	**0**	**0**	**0**	**0**	**0**	**0**	**0**	**0**	**0**	**0**	**0**	**0**	**0**	**0**	**0**	**0**	**0**	**0**	**0**	**0**	**0**	**0**	**0**	**0**	**0**	**0**	**0**	**0**	**0**	**0**	**0**
Id	**RW**	**Field**	**Value Id**	**Value**								**Description**																							
A	R	READY										NVMC is ready or busy																							
			Busy	0								NVMC is busy (on-going write or erase operation)																							
			Ready	1								NVMC is ready																							

11.7.2 CONFIG

Address offset: 0x504

Configuration register

Bit number				31	30	29	28	27	26	25	24	23	22	21	20	19	18	17	16	15	14	13	12	11	10	9	8	7	6	5	4	3	2	1	0
Id																																		A	A
Reset 0x00000000				**0**	**0**	**0**	**0**	**0**	**0**	**0**	**0**	**0**	**0**	**0**	**0**	**0**	**0**	**0**	**0**	**0**	**0**	**0**	**0**	**0**	**0**	**0**	**0**	**0**	**0**	**0**	**0**	**0**	**0**	**0**	**0**
Id	**RW**	**Field**	**Value Id**	**Value**								**Description**																							
A	RW	WEN										Program memory access mode. It is strongly recommended to only activate erase and write modes when they are actively used. Enabling write or erase will invalidate the cache and keep it invalidated.																							
			Ren	0								Read only access																							
			Wen	1								Write Enabled																							
			Een	2								Erase enabled																							

11.7.3 ERASEPAGE

Address offset: 0x508

Register for erasing a page in Code area

Bit number				31	30	29	28	27	26	25	24	23	22	21	20	19	18	17	16	15	14	13	12	11	10	9	8	7	6	5	4	3	2	1	0
Id				A	A	A	A	A	A	A	A	A	A	A	A	A	A	A	A	A	A	A	A	A	A	A	A	A	A	A	A	A	A	A	A
Reset 0x00000000				**0**	**0**	**0**	**0**	**0**	**0**	**0**	**0**	**0**	**0**	**0**	**0**	**0**	**0**	**0**	**0**	**0**	**0**	**0**	**0**	**0**	**0**	**0**	**0**	**0**	**0**	**0**	**0**	**0**	**0**	**0**	**0**
Id	**RW**	**Field**	**Value Id**	**Value**								**Description**																							
A	RW	ERASEPAGE										Register for starting erase of a page in Code area The value is the address to the page to be erased. (Addresses of first word in page). Note that code erase has to be enabled by CONFIG.EEN before the page can be erased. Attempts to erase pages that are outside the code area may result in undesirable behaviour, e.g. the wrong page may be erased.																							

11.7.4 ERASEPCR1 (Deprecated)

Address offset: 0x508

Register for erasing a page in Code area. Equivalent to ERASEPAGE.

Bit number				31	30	29	28	27	26	25	24	23	22	21	20	19	18	17	16	15	14	13	12	11	10	9	8	7	6	5	4	3	2	1	0
Id				A	A	A	A	A	A	A	A	A	A	A	A	A	A	A	A	A	A	A	A	A	A	A	A	A	A	A	A	A	A	A	A
Reset 0x00000000				**0**	**0**	**0**	**0**	**0**	**0**	**0**	**0**	**0**	**0**	**0**	**0**	**0**	**0**	**0**	**0**	**0**	**0**	**0**	**0**	**0**	**0**	**0**	**0**	**0**	**0**	**0**	**0**	**0**	**0**	**0**	**0**
Id	**RW**	**Field**	**Value Id**	**Value**								**Description**																							
A	RW	ERASEPCR1										Register for erasing a page in Code area. Equivalent to ERASEPAGE.																							

11.7.5 ERASEALL

Address offset: 0x50C

Register for erasing all non-volatile user memory

Bit number				31	30	29	28	27	26	25	24	23	22	21	20	19	18	17	16	15	14	13	12	11	10	9	8	7	6	5	4	3	2	1	0
Id																																			A
Reset 0x00000000				**0**	**0**	**0**	**0**	**0**	**0**	**0**	**0**	**0**	**0**	**0**	**0**	**0**	**0**	**0**	**0**	**0**	**0**	**0**	**0**	**0**	**0**	**0**	**0**	**0**	**0**	**0**	**0**	**0**	**0**	**0**	**0**
Id	**RW**	**Field**	**Value Id**	**Value**								**Description**																							
A	RW	ERASEALL										Erase all non-volatile memory including UICR registers. Note that code erase has to be enabled by CONFIG.EEN before the UICR can be erased.																							
			NoOperation	0								No operation																							
			Erase	1								Start chip erase																							

11.7.6 ERASEPCR0 (Deprecated)

Address offset: 0x510

Register for erasing a page in Code area. Equivalent to ERASEPAGE.

Bit number				31	30	29	28	27	26	25	24	23	22	21	20	19	18	17	16	15	14	13	12	11	10	9	8	7	6	5	4	3	2	1	0
Id				A	A	A	A	A	A	A	A	A	A	A	A	A	A	A	A	A	A	A	A	A	A	A	A	A	A	A	A	A	A	A	A
Reset 0x00000000				**0**	**0**	**0**	**0**	**0**	**0**	**0**	**0**	**0**	**0**	**0**	**0**	**0**	**0**	**0**	**0**	**0**	**0**	**0**	**0**	**0**	**0**	**0**	**0**	**0**	**0**	**0**	**0**	**0**	**0**	**0**	**0**
Id	**RW**	**Field**	**Value Id**	**Value**								**Description**																							
A	RW	ERASEPCR0										Register for starting erase of a page in Code area. Equivalent to ERASEPAGE.																							

11.7.7 ERASEUICR

Address offset: 0x514

Register for erasing User Information Configuration Registers

Bit number				31	30	29	28	27	26	25	24	23	22	21	20	19	18	17	16	15	14	13	12	11	10	9	8	7	6	5	4	3	2	1	0
Id																																			A
Reset 0x00000000				**0**	**0**	**0**	**0**	**0**	**0**	**0**	**0**	**0**	**0**	**0**	**0**	**0**	**0**	**0**	**0**	**0**	**0**	**0**	**0**	**0**	**0**	**0**	**0**	**0**	**0**	**0**	**0**	**0**	**0**	**0**	**0**
Id	**RW**	**Field**	**Value Id**	**Value**								**Description**																							
A	RW	ERASEUICR										Register starting erase of all User Information Configuration Registers. Note that code erase has to be enabled by CONFIG.EEN before the UICR can be erased.																							
			NoOperation	0								No operation																							
			Erase	1								Start erase of UICR																							

11.7.8 ICACHECNF

Address offset: 0x540

I-Code cache configuration register.

Bit number				31	30	29	28	27	26	25	24	23	22	21	20	19	18	17	16	15	14	13	12	11	10	9	8	7	6	5	4	3	2	1	0
Id																											B								A
Reset 0x00000000				**0**	**0**	**0**	**0**	**0**	**0**	**0**	**0**	**0**	**0**	**0**	**0**	**0**	**0**	**0**	**0**	**0**	**0**	**0**	**0**	**0**	**0**	**0**	**0**	**0**	**0**	**0**	**0**	**0**	**0**	**0**	**0**
Id	**RW**	**Field**	**Value Id**	**Value**								**Description**																							
A	RW	CACHEEN										Cache enable																							
			Disabled	0								Disable cache. Invalidates all cache entries.																							
			Enabled	1								Enable cache																							
B	RW	CACHEPROFEN										Cache profiling enable																							
			Disabled	0								Disable cache profiling																							
			Enabled	1								Enable cache profiling																							

11.7.9 IHIT

Address offset: 0x548

I-Code cache hit counter.

Bit number	31	30	29	28	27	26	25	24	23	22	21	20	19	18	17	16	15	14	13	12	11	10	9	8	7	6	5	4	3	2	1	0
Id	A	A	A	A	A	A	A	A	A	A	A	A	A	A	A	A	A	A	A	A	A	A	A	A	A	A	A	A	A	A	A	A
Reset 0x00000000	**0**	**0**	**0**	**0**	**0**	**0**	**0**	**0**	**0**	**0**	**0**	**0**	**0**	**0**	**0**	**0**	**0**	**0**	**0**	**0**	**0**	**0**	**0**	**0**	**0**	**0**	**0**	**0**	**0**	**0**	**0**	**0**

Id	RW	Field	Value Id	Value	Description
A	RW	HITS			Number of cache hits

11.7.10 IMISS

Address offset: 0x54C

I-Code cache miss counter.

Bit number	31	30	29	28	27	26	25	24	23	22	21	20	19	18	17	16	15	14	13	12	11	10	9	8	7	6	5	4	3	2	1	0
Id	A	A	A	A	A	A	A	A	A	A	A	A	A	A	A	A	A	A	A	A	A	A	A	A	A	A	A	A	A	A	A	A
Reset 0x00000000	**0**	**0**	**0**	**0**	**0**	**0**	**0**	**0**	**0**	**0**	**0**	**0**	**0**	**0**	**0**	**0**	**0**	**0**	**0**	**0**	**0**	**0**	**0**	**0**	**0**	**0**	**0**	**0**	**0**	**0**	**0**	**0**

Id	RW	Field	Value Id	Value	Description
A	RW	MISSES			Number of cache misses

11.8 Electrical Specification

11.8.1 Flash programming

Symbol	Description	Min.	Typ.	Max.	Units
$n_{WRITE,BLOCK}$	Amount of writes allowed in a block between erase			181	
t_{WRITE}	Time to write one word	67.5		338	µs
$t_{ERASEPAGE}$	Time to erase one page	2.05		89.7	ms
$t_{ERASEALL}$	Time to erase all flash	6.72		295.3	ms

11.8.2 Cache size

Symbol	Description	Min.	Typ.	Max.	Units
$Size_{ICODE}$	I-Code cache size		2048		Bytes

12 BPROT — Block protection

The mechanism for protecting non-volatile memory can be used to prevent application code from erasing or writing to protected blocks.

Non-volatile memory can be protected from erases and writes depending on the settings in the CONFIG registers. One bit in a CONFIG register represents one protected block of 4 kB. There are four CONFIG registers of 32 bits, which means there are 128 protectable blocks in total.

> **Important:** If an erase or write to a protected block is detected, the CPU will hard fault. If an ERASEALL operation is attempted from the CPU while any block is protected, it will be blocked and the CPU will hard fault.

On reset, all the protection bits are cleared. To ensure safe operation, the first task after reset must be to set the protection bits. The only way of clearing protection bits is by resetting the device from any reset source.

The protection mechanism is turned off when in debug interface mode (a debugger is connected) and the DISABLEINDEBUG register is set to disable. For more information, see *Debug and trace* on page 70.

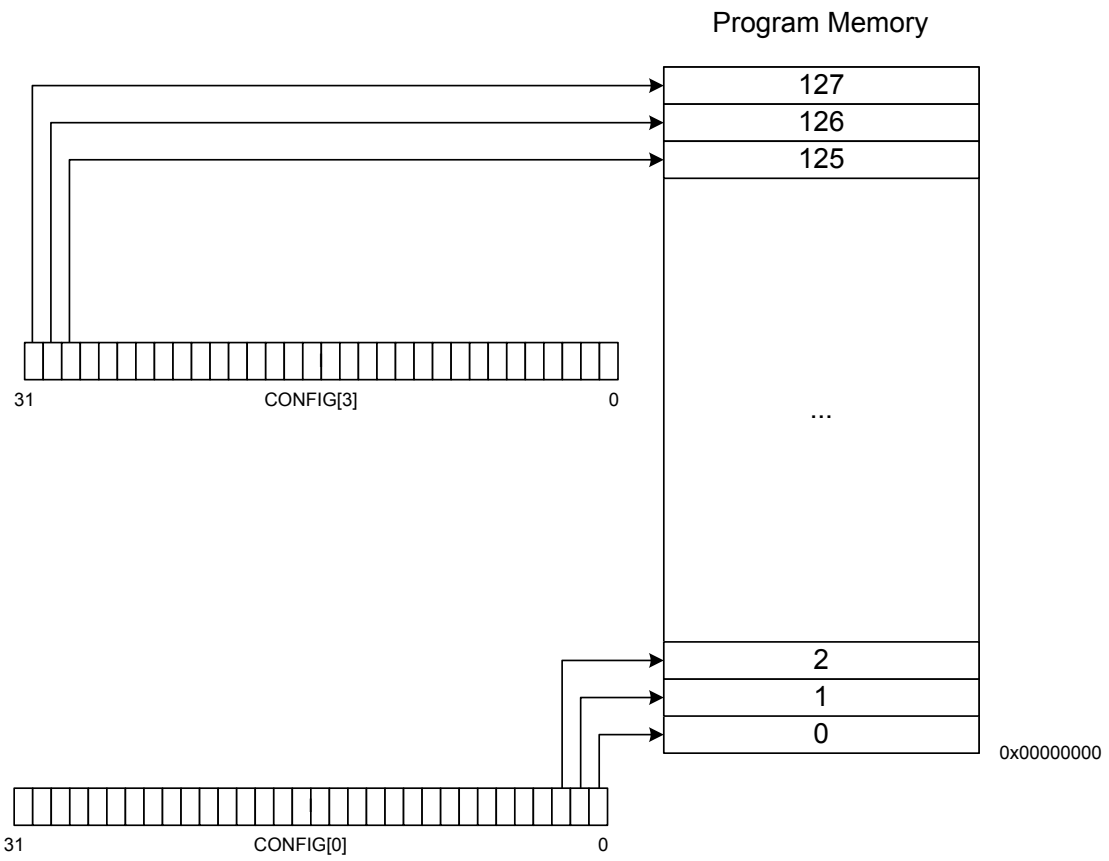

Figure 8: Protected regions of program memory

12.1 Registers

Table 10: Instances

Base address	Peripheral	Instance	Description	Configuration
0x40000000	BPROT	BPROT	Block Protect	

Table 11: Register Overview

Register	Offset	Description
CONFIG0	0x600	Block protect configuration register 0
CONFIG1	0x604	Block protect configuration register 1
DISABLEINDEBUG	0x608	Disable protection mechanism in debug interface mode
	0x60C	Reserved
CONFIG2	0x610	Block protect configuration register 2
CONFIG3	0x614	Block protect configuration register 3

12.1.1 CONFIG0

Address offset: 0x600

Block protect configuration register 0

Bit number	31	30	29	28	27	26	25	24	23	22	21	20	19	18	17	16	15	14	13	12	11	10	9	8	7	6	5	4	3	2	1	0
Id	f	e	d	c	b	a	Z	Y	X	W	V	U	T	S	R	Q	P	O	N	M	L	K	J	I	H	G	F	E	D	C	B	A
Reset 0x00000000	**0**	**0**	**0**	**0**	**0**	**0**	**0**	**0**	**0**	**0**	**0**	**0**	**0**	**0**	**0**	**0**	**0**	**0**	**0**	**0**	**0**	**0**	**0**	**0**	**0**	**0**	**0**	**0**	**0**	**0**	**0**	**0**

Id	RW	Field	Value Id	Value	Description
A	RW	REGION0			Enable protection for region 0. Write '0' has no effect.
			Disabled	0	Protection disabled
			Enabled	1	Protection enable
B	RW	REGION1			Enable protection for region 1. Write '0' has no effect.
			Disabled	0	Protection disabled
			Enabled	1	Protection enable
C	RW	REGION2			Enable protection for region 2. Write '0' has no effect.
			Disabled	0	Protection disabled
			Enabled	1	Protection enable
D	RW	REGION3			Enable protection for region 3. Write '0' has no effect.
			Disabled	0	Protection disabled
			Enabled	1	Protection enable
E	RW	REGION4			Enable protection for region 4. Write '0' has no effect.
			Disabled	0	Protection disabled
			Enabled	1	Protection enable
F	RW	REGION5			Enable protection for region 5. Write '0' has no effect.
			Disabled	0	Protection disabled
			Enabled	1	Protection enable
G	RW	REGION6			Enable protection for region 6. Write '0' has no effect.
			Disabled	0	Protection disabled
			Enabled	1	Protection enable
H	RW	REGION7			Enable protection for region 7. Write '0' has no effect.
			Disabled	0	Protection disabled
			Enabled	1	Protection enable
I	RW	REGION8			Enable protection for region 8. Write '0' has no effect.
			Disabled	0	Protection disabled
			Enabled	1	Protection enable
J	RW	REGION9			Enable protection for region 9. Write '0' has no effect.
			Disabled	0	Protection disabled
			Enabled	1	Protection enable
K	RW	REGION10			Enable protection for region 10. Write '0' has no effect.
			Disabled	0	Protection disabled
			Enabled	1	Protection enable
L	RW	REGION11			Enable protection for region 11. Write '0' has no effect.
			Disabled	0	Protection disabled
			Enabled	1	Protection enable
M	RW	REGION12			Enable protection for region 12. Write '0' has no effect.
			Disabled	0	Protection disabled
			Enabled	1	Protection enable
N	RW	REGION13			Enable protection for region 13. Write '0' has no effect.

Bit number				31	30	29	28	27	26	25	24	23	22	21	20	19	18	17	16	15	14	13	12	11	10	9	8	7	6	5	4	3	2	1	0
Id				f	e	d	c	b	a	Z	Y	X	W	V	U	T	S	R	Q	P	O	N	M	L	K	J	I	H	G	F	E	D	C	B	A
Reset 0x00000000				**0**	**0**	**0**	**0**	**0**	**0**	**0**	**0**	**0**	**0**	**0**	**0**	**0**	**0**	**0**	**0**	**0**	**0**	**0**	**0**	**0**	**0**	**0**	**0**	**0**	**0**	**0**	**0**	**0**	**0**	**0**	**0**
Id	**RW**	**Field**	**Value Id**	**Value**								**Description**																							
			Disabled	0								Protection disabled																							
			Enabled	1								Protection enable																							
O	RW	REGION14										Enable protection for region 14. Write '0' has no effect.																							
			Disabled	0								Protection disabled																							
			Enabled	1								Protection enable																							
P	RW	REGION15										Enable protection for region 15. Write '0' has no effect.																							
			Disabled	0								Protection disabled																							
			Enabled	1								Protection enable																							
Q	RW	REGION16										Enable protection for region 16. Write '0' has no effect.																							
			Disabled	0								Protection disabled																							
			Enabled	1								Protection enable																							
R	RW	REGION17										Enable protection for region 17. Write '0' has no effect.																							
			Disabled	0								Protection disabled																							
			Enabled	1								Protection enable																							
S	RW	REGION18										Enable protection for region 18. Write '0' has no effect.																							
			Disabled	0								Protection disabled																							
			Enabled	1								Protection enable																							
T	RW	REGION19										Enable protection for region 19. Write '0' has no effect.																							
			Disabled	0								Protection disabled																							
			Enabled	1								Protection enable																							
U	RW	REGION20										Enable protection for region 20. Write '0' has no effect.																							
			Disabled	0								Protection disabled																							
			Enabled	1								Protection enable																							
V	RW	REGION21										Enable protection for region 21. Write '0' has no effect.																							
			Disabled	0								Protection disabled																							
			Enabled	1								Protection enable																							
W	RW	REGION22										Enable protection for region 22. Write '0' has no effect.																							
			Disabled	0								Protection disabled																							
			Enabled	1								Protection enable																							
X	RW	REGION23										Enable protection for region 23. Write '0' has no effect.																							
			Disabled	0								Protection disabled																							
			Enabled	1								Protection enable																							
Y	RW	REGION24										Enable protection for region 24. Write '0' has no effect.																							
			Disabled	0								Protection disabled																							
			Enabled	1								Protection enable																							
Z	RW	REGION25										Enable protection for region 25. Write '0' has no effect.																							
			Disabled	0								Protection disabled																							
			Enabled	1								Protection enable																							
a	RW	REGION26										Enable protection for region 26. Write '0' has no effect.																							
			Disabled	0								Protection disabled																							
			Enabled	1								Protection enable																							
b	RW	REGION27										Enable protection for region 27. Write '0' has no effect.																							
			Disabled	0								Protection disabled																							
			Enabled	1								Protection enable																							
c	RW	REGION28										Enable protection for region 28. Write '0' has no effect.																							
			Disabled	0								Protection disabled																							
			Enabled	1								Protection enable																							
d	RW	REGION29										Enable protection for region 29. Write '0' has no effect.																							
			Disabled	0								Protection disabled																							
			Enabled	1								Protection enable																							
e	RW	REGION30										Enable protection for region 30. Write '0' has no effect.																							
			Disabled	0								Protection disabled																							
			Enabled	1								Protection enable																							
f	RW	REGION31										Enable protection for region 31. Write '0' has no effect.																							
			Disabled	0								Protection disabled																							

Bit number				31	30	29	28	27	26	25	24	23	22	21	20	19	18	17	16	15	14	13	12	11	10	9	8	7	6	5	4	3	2	1	0
Id				f	e	d	c	b	a	Z	Y	X	W	V	U	T	S	R	Q	P	O	N	M	L	K	J	I	H	G	F	E	D	C	B	A
Reset 0x00000000				**0**	**0**	**0**	**0**	**0**	**0**	**0**	**0**	**0**	**0**	**0**	**0**	**0**	**0**	**0**	**0**	**0**	**0**	**0**	**0**	**0**	**0**	**0**	**0**	**0**	**0**	**0**	**0**	**0**	**0**	**0**	**0**
Id	**RW**	**Field**	**Value Id**	**Value**								**Description**																							
			Enabled	1								Protection enable																							

12.1.2 CONFIG1

Address offset: 0x604

Block protect configuration register 1

Bit number				31	30	29	28	27	26	25	24	23	22	21	20	19	18	17	16	15	14	13	12	11	10	9	8	7	6	5	4	3	2	1	0
Id				f	e	d	c	b	a	Z	Y	X	W	V	U	T	S	R	Q	P	O	N	M	L	K	J	I	H	G	F	E	D	C	B	A
Reset 0x00000000				**0**	**0**	**0**	**0**	**0**	**0**	**0**	**0**	**0**	**0**	**0**	**0**	**0**	**0**	**0**	**0**	**0**	**0**	**0**	**0**	**0**	**0**	**0**	**0**	**0**	**0**	**0**	**0**	**0**	**0**	**0**	**0**
Id	**RW**	**Field**	**Value Id**	**Value**								**Description**																							
A	RW	REGION32										Enable protection for region 32. Write '0' has no effect.																							
			Disabled	0								Protection disabled																							
			Enabled	1								Protection enabled																							
B	RW	REGION33										Enable protection for region 33. Write '0' has no effect.																							
			Disabled	0								Protection disabled																							
			Enabled	1								Protection enabled																							
C	RW	REGION34										Enable protection for region 34. Write '0' has no effect.																							
			Disabled	0								Protection disabled																							
			Enabled	1								Protection enabled																							
D	RW	REGION35										Enable protection for region 35. Write '0' has no effect.																							
			Disabled	0								Protection disabled																							
			Enabled	1								Protection enabled																							
E	RW	REGION36										Enable protection for region 36. Write '0' has no effect.																							
			Disabled	0								Protection disabled																							
			Enabled	1								Protection enabled																							
F	RW	REGION37										Enable protection for region 37. Write '0' has no effect.																							
			Disabled	0								Protection disabled																							
			Enabled	1								Protection enabled																							
G	RW	REGION38										Enable protection for region 38. Write '0' has no effect.																							
			Disabled	0								Protection disabled																							
			Enabled	1								Protection enabled																							
H	RW	REGION39										Enable protection for region 39. Write '0' has no effect.																							
			Disabled	0								Protection disabled																							
			Enabled	1								Protection enabled																							
I	RW	REGION40										Enable protection for region 40. Write '0' has no effect.																							
			Disabled	0								Protection disabled																							
			Enabled	1								Protection enabled																							
J	RW	REGION41										Enable protection for region 41. Write '0' has no effect.																							
			Disabled	0								Protection disabled																							
			Enabled	1								Protection enabled																							
K	RW	REGION42										Enable protection for region 42. Write '0' has no effect.																							
			Disabled	0								Protection disabled																							
			Enabled	1								Protection enabled																							
L	RW	REGION43										Enable protection for region 43. Write '0' has no effect.																							
			Disabled	0								Protection disabled																							
			Enabled	1								Protection enabled																							
M	RW	REGION44										Enable protection for region 44. Write '0' has no effect.																							
			Disabled	0								Protection disabled																							
			Enabled	1								Protection enabled																							
N	RW	REGION45										Enable protection for region 45. Write '0' has no effect.																							
			Disabled	0								Protection disabled																							
			Enabled	1								Protection enabled																							
O	RW	REGION46										Enable protection for region 46. Write '0' has no effect.																							
			Disabled	0								Protection disabled																							

Bit number				31	30	29	28	27	26	25	24	23	22	21	20	19	18	17	16	15	14	13	12	11	10	9	8	7	6	5	4	3	2	1	0
Id				f	e	d	c	b	a	Z	Y	X	W	V	U	T	S	R	Q	P	O	N	M	L	K	J	I	H	G	F	E	D	C	B	A
Reset 0x00000000				**0**	**0**	**0**	**0**	**0**	**0**	**0**	**0**	**0**	**0**	**0**	**0**	**0**	**0**	**0**	**0**	**0**	**0**	**0**	**0**	**0**	**0**	**0**	**0**	**0**	**0**	**0**	**0**	**0**	**0**	**0**	**0**
Id	**RW**	**Field**	**Value Id**	**Value**								**Description**																							
			Enabled	1								Protection enabled																							
P	RW	REGION47										Enable protection for region 47. Write '0' has no effect.																							
			Disabled	0								Protection disabled																							
			Enabled	1								Protection enabled																							
Q	RW	REGION48										Enable protection for region 48. Write '0' has no effect.																							
			Disabled	0								Protection disabled																							
			Enabled	1								Protection enabled																							
R	RW	REGION49										Enable protection for region 49. Write '0' has no effect.																							
			Disabled	0								Protection disabled																							
			Enabled	1								Protection enabled																							
S	RW	REGION50										Enable protection for region 50. Write '0' has no effect.																							
			Disabled	0								Protection disabled																							
			Enabled	1								Protection enabled																							
T	RW	REGION51										Enable protection for region 51. Write '0' has no effect.																							
			Disabled	0								Protection disabled																							
			Enabled	1								Protection enabled																							
U	RW	REGION52										Enable protection for region 52. Write '0' has no effect.																							
			Disabled	0								Protection disabled																							
			Enabled	1								Protection enabled																							
V	RW	REGION53										Enable protection for region 53. Write '0' has no effect.																							
			Disabled	0								Protection disabled																							
			Enabled	1								Protection enabled																							
W	RW	REGION54										Enable protection for region 54. Write '0' has no effect.																							
			Disabled	0								Protection disabled																							
			Enabled	1								Protection enabled																							
X	RW	REGION55										Enable protection for region 55. Write '0' has no effect.																							
			Disabled	0								Protection disabled																							
			Enabled	1								Protection enabled																							
Y	RW	REGION56										Enable protection for region 56. Write '0' has no effect.																							
			Disabled	0								Protection disabled																							
			Enabled	1								Protection enabled																							
Z	RW	REGION57										Enable protection for region 57. Write '0' has no effect.																							
			Disabled	0								Protection disabled																							
			Enabled	1								Protection enabled																							
a	RW	REGION58										Enable protection for region 58. Write '0' has no effect.																							
			Disabled	0								Protection disabled																							
			Enabled	1								Protection enabled																							
b	RW	REGION59										Enable protection for region 59. Write '0' has no effect.																							
			Disabled	0								Protection disabled																							
			Enabled	1								Protection enabled																							
c	RW	REGION60										Enable protection for region 60. Write '0' has no effect.																							
			Disabled	0								Protection disabled																							
			Enabled	1								Protection enabled																							
d	RW	REGION61										Enable protection for region 61. Write '0' has no effect.																							
			Disabled	0								Protection disabled																							
			Enabled	1								Protection enabled																							
e	RW	REGION62										Enable protection for region 62. Write '0' has no effect.																							
			Disabled	0								Protection disabled																							
			Enabled	1								Protection enabled																							
f	RW	REGION63										Enable protection for region 63. Write '0' has no effect.																							
			Disabled	0								Protection disabled																							
			Enabled	1								Protection enabled																							

12.1.3 DISABLEINDEBUG

Address offset: 0x608

Disable protection mechanism in debug interface mode

Bit number	31	30	29	28	27	26	25	24	23	22	21	20	19	18	17	16	15	14	13	12	11	10	9	8	7	6	5	4	3	2	1	0
Id																																A
Reset 0x00000001	**0**	**0**	**0**	**0**	**0**	**0**	**0**	**0**	**0**	**0**	**0**	**0**	**0**	**0**	**0**	**0**	**0**	**0**	**0**	**0**	**0**	**0**	**0**	**0**	**0**	**0**	**0**	**0**	**0**	**0**	**0**	**1**

Id	RW	Field	Value Id	Value	Description
A	RW	DISABLEINDEBUG			Disable the protection mechanism for NVM regions while in debug interface mode. This register will only disable the protection mechanism if the device is in debug interface mode.
			Disabled	1	Disable in debug
			Enabled	0	Enable in debug

12.1.4 CONFIG2

Address offset: 0x610

Block protect configuration register 2

Bit number	31	30	29	28	27	26	25	24	23	22	21	20	19	18	17	16	15	14	13	12	11	10	9	8	7	6	5	4	3	2	1	0
Id	f	e	d	c	b	a	Z	Y	X	W	V	U	T	S	R	Q	P	O	N	M	L	K	J	I	H	G	F	E	D	C	B	A
Reset 0x00000000	**0**	**0**	**0**	**0**	**0**	**0**	**0**	**0**	**0**	**0**	**0**	**0**	**0**	**0**	**0**	**0**	**0**	**0**	**0**	**0**	**0**	**0**	**0**	**0**	**0**	**0**	**0**	**0**	**0**	**0**	**0**	**0**

Id	RW	Field	Value Id	Value	Description
A	RW	REGION64			Enable protection for region 64. Write '0' has no effect.
			Disabled	0	Protection disabled
			Enabled	1	Protection enabled
B	RW	REGION65			Enable protection for region 65. Write '0' has no effect.
			Disabled	0	Protection disabled
			Enabled	1	Protection enabled
C	RW	REGION66			Enable protection for region 66. Write '0' has no effect.
			Disabled	0	Protection disabled
			Enabled	1	Protection enabled
D	RW	REGION67			Enable protection for region 67. Write '0' has no effect.
			Disabled	0	Protection disabled
			Enabled	1	Protection enabled
E	RW	REGION68			Enable protection for region 68. Write '0' has no effect.
			Disabled	0	Protection disabled
			Enabled	1	Protection enabled
F	RW	REGION69			Enable protection for region 69. Write '0' has no effect.
			Disabled	0	Protection disabled
			Enabled	1	Protection enabled
G	RW	REGION70			Enable protection for region 70. Write '0' has no effect.
			Disabled	0	Protection disabled
			Enabled	1	Protection enabled
H	RW	REGION71			Enable protection for region 71. Write '0' has no effect.
			Disabled	0	Protection disabled
			Enabled	1	Protection enabled
I	RW	REGION72			Enable protection for region 72. Write '0' has no effect.
			Disabled	0	Protection disabled
			Enabled	1	Protection enabled
J	RW	REGION73			Enable protection for region 73. Write '0' has no effect.
			Disabled	0	Protection disabled
			Enabled	1	Protection enabled
K	RW	REGION74			Enable protection for region 74. Write '0' has no effect.
			Disabled	0	Protection disabled
			Enabled	1	Protection enabled
L	RW	REGION75			Enable protection for region 75. Write '0' has no effect.
			Disabled	0	Protection disabled

Bit number				31	30	29	28	27	26	25	24	23	22	21	20	19	18	17	16	15	14	13	12	11	10	9	8	7	6	5	4	3	2	1	0
Id				f	e	d	c	b	a	Z	Y	X	W	V	U	T	S	R	Q	P	O	N	M	L	K	J	I	H	G	F	E	D	C	B	A
Reset 0x00000000				**0**	**0**	**0**	**0**	**0**	**0**	**0**	**0**	**0**	**0**	**0**	**0**	**0**	**0**	**0**	**0**	**0**	**0**	**0**	**0**	**0**	**0**	**0**	**0**	**0**	**0**	**0**	**0**	**0**	**0**	**0**	**0**
Id	**RW**	**Field**	**Value Id**	**Value**								**Description**																							
			Enabled	1								Protection enabled																							
M	RW	REGION76										Enable protection for region 76. Write '0' has no effect.																							
			Disabled	0								Protection disabled																							
			Enabled	1								Protection enabled																							
N	RW	REGION77										Enable protection for region 77. Write '0' has no effect.																							
			Disabled	0								Protection disabled																							
			Enabled	1								Protection enabled																							
O	RW	REGION78										Enable protection for region 78. Write '0' has no effect.																							
			Disabled	0								Protection disabled																							
			Enabled	1								Protection enabled																							
P	RW	REGION79										Enable protection for region 79. Write '0' has no effect.																							
			Disabled	0								Protection disabled																							
			Enabled	1								Protection enabled																							
Q	RW	REGION80										Enable protection for region 80. Write '0' has no effect.																							
			Disabled	0								Protection disabled																							
			Enabled	1								Protection enabled																							
R	RW	REGION81										Enable protection for region 81. Write '0' has no effect.																							
			Disabled	0								Protection disabled																							
			Enabled	1								Protection enabled																							
S	RW	REGION82										Enable protection for region 82. Write '0' has no effect.																							
			Disabled	0								Protection disabled																							
			Enabled	1								Protection enabled																							
T	RW	REGION83										Enable protection for region 83. Write '0' has no effect.																							
			Disabled	0								Protection disabled																							
			Enabled	1								Protection enabled																							
U	RW	REGION84										Enable protection for region 84. Write '0' has no effect.																							
			Disabled	0								Protection disabled																							
			Enabled	1								Protection enabled																							
V	RW	REGION85										Enable protection for region 85. Write '0' has no effect.																							
			Disabled	0								Protection disabled																							
			Enabled	1								Protection enabled																							
W	RW	REGION86										Enable protection for region 86. Write '0' has no effect.																							
			Disabled	0								Protection disabled																							
			Enabled	1								Protection enabled																							
X	RW	REGION87										Enable protection for region 87. Write '0' has no effect.																							
			Disabled	0								Protection disabled																							
			Enabled	1								Protection enabled																							
Y	RW	REGION88										Enable protection for region 88. Write '0' has no effect.																							
			Disabled	0								Protection disabled																							
			Enabled	1								Protection enabled																							
Z	RW	REGION89										Enable protection for region 89. Write '0' has no effect.																							
			Disabled	0								Protection disabled																							
			Enabled	1								Protection enabled																							
a	RW	REGION90										Enable protection for region 90. Write '0' has no effect.																							
			Disabled	0								Protection disabled																							
			Enabled	1								Protection enabled																							
b	RW	REGION91										Enable protection for region 91. Write '0' has no effect.																							
			Disabled	0								Protection disabled																							
			Enabled	1								Protection enabled																							
c	RW	REGION92										Enable protection for region 92. Write '0' has no effect.																							
			Disabled	0								Protection disabled																							
			Enabled	1								Protection enabled																							
d	RW	REGION93										Enable protection for region 93. Write '0' has no effect.																							
			Disabled	0								Protection disabled																							
			Enabled	1								Protection enabled																							

Bit number				31	30	29	28	27	26	25	24	23	22	21	20	19	18	17	16	15	14	13	12	11	10	9	8	7	6	5	4	3	2	1	0
Id				f	e	d	c	b	a	Z	Y	X	W	V	U	T	S	R	Q	P	O	N	M	L	K	J	I	H	G	F	E	D	C	B	A
Reset 0x00000000				**0**	**0**	**0**	**0**	**0**	**0**	**0**	**0**	**0**	**0**	**0**	**0**	**0**	**0**	**0**	**0**	**0**	**0**	**0**	**0**	**0**	**0**	**0**	**0**	**0**	**0**	**0**	**0**	**0**	**0**	**0**	**0**
Id	**RW**	**Field**	**Value Id**	**Value**								**Description**																							
e	RW	REGION94										Enable protection for region 94. Write '0' has no effect.																							
			Disabled	0								Protection disabled																							
			Enabled	1								Protection enabled																							
f	RW	REGION95										Enable protection for region 95. Write '0' has no effect.																							
			Disabled	0								Protection disabled																							
			Enabled	1								Protection enabled																							

12.1.5 CONFIG3

Address offset: 0x614

Block protect configuration register 3

Bit number				31	30	29	28	27	26	25	24	23	22	21	20	19	18	17	16	15	14	13	12	11	10	9	8	7	6	5	4	3	2	1	0
Id				f	e	d	c	b	a	Z	Y	X	W	V	U	T	S	R	Q	P	O	N	M	L	K	J	I	H	G	F	E	D	C	B	A
Reset 0x00000000				**0**	**0**	**0**	**0**	**0**	**0**	**0**	**0**	**0**	**0**	**0**	**0**	**0**	**0**	**0**	**0**	**0**	**0**	**0**	**0**	**0**	**0**	**0**	**0**	**0**	**0**	**0**	**0**	**0**	**0**	**0**	**0**
Id	**RW**	**Field**	**Value Id**	**Value**								**Description**																							
A	RW	REGION96										Enable protection for region 96. Write '0' has no effect.																							
			Disabled	0								Protection disabled																							
			Enabled	1								Protection enabled																							
B	RW	REGION97										Enable protection for region 97. Write '0' has no effect.																							
			Disabled	0								Protection disabled																							
			Enabled	1								Protection enabled																							
C	RW	REGION98										Enable protection for region 98. Write '0' has no effect.																							
			Disabled	0								Protection disabled																							
			Enabled	1								Protection enabled																							
D	RW	REGION99										Enable protection for region 99. Write '0' has no effect.																							
			Disabled	0								Protection disabled																							
			Enabled	1								Protection enabled																							
E	RW	REGION100										Enable protection for region 100. Write '0' has no effect.																							
			Disabled	0								Protection disabled																							
			Enabled	1								Protection enabled																							
F	RW	REGION101										Enable protection for region 101. Write '0' has no effect.																							
			Disabled	0								Protection disabled																							
			Enabled	1								Protection enabled																							
G	RW	REGION102										Enable protection for region 102. Write '0' has no effect.																							
			Disabled	0								Protection disabled																							
			Enabled	1								Protection enabled																							
H	RW	REGION103										Enable protection for region 103. Write '0' has no effect.																							
			Disabled	0								Protection disabled																							
			Enabled	1								Protection enabled																							
I	RW	REGION104										Enable protection for region 104. Write '0' has no effect.																							
			Disabled	0								Protection disabled																							
			Enabled	1								Protection enabled																							
J	RW	REGION105										Enable protection for region 105. Write '0' has no effect.																							
			Disabled	0								Protection disabled																							
			Enabled	1								Protection enabled																							
K	RW	REGION106										Enable protection for region 106. Write '0' has no effect.																							
			Disabled	0								Protection disabled																							
			Enabled	1								Protection enabled																							
L	RW	REGION107										Enable protection for region 107. Write '0' has no effect.																							
			Disabled	0								Protection disabled																							
			Enabled	1								Protection enabled																							
M	RW	REGION108										Enable protection for region 108. Write '0' has no effect.																							
			Disabled	0								Protection disabled																							
			Enabled	1								Protection enabled																							

Bit number				31	30	29	28	27	26	25	24	23	22	21	20	19	18	17	16	15	14	13	12	11	10	9	8	7	6	5	4	3	2	1	0
Id				f	e	d	c	b	a	Z	Y	X	W	V	U	T	S	R	Q	P	O	N	M	L	K	J	I	H	G	F	E	D	C	B	A
Reset 0x00000000				**0**	**0**	**0**	**0**	**0**	**0**	**0**	**0**	**0**	**0**	**0**	**0**	**0**	**0**	**0**	**0**	**0**	**0**	**0**	**0**	**0**	**0**	**0**	**0**	**0**	**0**	**0**	**0**	**0**	**0**	**0**	**0**
Id	**RW**	**Field**	**Value Id**	**Value**																															**Description**
N	RW	REGION109																																	Enable protection for region 109. Write '0' has no effect.
			Disabled	0																															Protection disabled
			Enabled	1																															Protection enabled
O	RW	REGION110																																	Enable protection for region 110. Write '0' has no effect.
			Disabled	0																															Protection disabled
			Enabled	1																															Protection enabled
P	RW	REGION111																																	Enable protection for region 111. Write '0' has no effect.
			Disabled	0																															Protection disabled
			Enabled	1																															Protection enabled
Q	RW	REGION112																																	Enable protection for region 112. Write '0' has no effect.
			Disabled	0																															Protection disabled
			Enabled	1																															Protection enabled
R	RW	REGION113																																	Enable protection for region 113. Write '0' has no effect.
			Disabled	0																															Protection disabled
			Enabled	1																															Protection enabled
S	RW	REGION114																																	Enable protection for region 114. Write '0' has no effect.
			Disabled	0																															Protection disabled
			Enabled	1																															Protection enabled
T	RW	REGION115																																	Enable protection for region 115. Write '0' has no effect.
			Disabled	0																															Protection disabled
			Enabled	1																															Protection enabled
U	RW	REGION116																																	Enable protection for region 116. Write '0' has no effect.
			Disabled	0																															Protection disabled
			Enabled	1																															Protection enabled
V	RW	REGION117																																	Enable protection for region 117. Write '0' has no effect.
			Disabled	0																															Protection disabled
			Enabled	1																															Protection enabled
W	RW	REGION118																																	Enable protection for region 118. Write '0' has no effect.
			Disabled	0																															Protection disabled
			Enabled	1																															Protection enabled
X	RW	REGION119																																	Enable protection for region 119. Write '0' has no effect.
			Disabled	0																															Protection disabled
			Enabled	1																															Protection enabled
Y	RW	REGION120																																	Enable protection for region 120. Write '0' has no effect.
			Disabled	0																															Protection disabled
			Enabled	1																															Protection enabled
Z	RW	REGION121																																	Enable protection for region 121. Write '0' has no effect.
			Disabled	0																															Protection disabled
			Enabled	1																															Protection enabled
a	RW	REGION122																																	Enable protection for region 122. Write '0' has no effect.
			Disabled	0																															Protection disabled
			Enabled	1																															Protection enabled
b	RW	REGION123																																	Enable protection for region 123. Write '0' has no effect.
			Disabled	0																															Protection disabled
			Enabled	1																															Protection enabled
c	RW	REGION124																																	Enable protection for region 124. Write '0' has no effect.
			Disabled	0																															Protection disabled
			Enabled	1																															Protection enabled
d	RW	REGION125																																	Enable protection for region 125. Write '0' has no effect.
			Disabled	0																															Protection disabled
			Enabled	1																															Protection enabled
e	RW	REGION126																																	Enable protection for region 126. Write '0' has no effect.
			Disabled	0																															Protection disabled
			Enabled	1																															Protection enabled
f	RW	REGION127																																	Enable protection for region 127. Write '0' has no effect.

Bit number				31	30	29	28	27	26	25	24	23	22	21	20	19	18	17	16	15	14	13	12	11	10	9	8	7	6	5	4	3	2	1	0
Id				f	e	d	c	b	a	Z	Y	X	W	V	U	T	S	R	Q	P	O	N	M	L	K	J	I	H	G	F	E	D	C	B	A
Reset 0x00000000				**0**	**0**	**0**	**0**	**0**	**0**	**0**	**0**	**0**	**0**	**0**	**0**	**0**	**0**	**0**	**0**	**0**	**0**	**0**	**0**	**0**	**0**	**0**	**0**	**0**	**0**	**0**	**0**	**0**	**0**	**0**	**0**
Id	**RW**	**Field**	**Value Id**	**Value**								**Description**																							
			Disabled	0								Protection disabled																							
			Enabled	1								Protection enabled																							

13 FICR — Factory information configuration registers

Factory information configuration registers (FICR) are pre-programmed in factory and cannot be erased by the user. These registers contain chip-specific information and configuration.

13.1 Registers

Table 12: Instances

Base address	Peripheral	Instance	Description	Configuration
0x10000000	FICR	FICR	Factory Information Configuration	

Table 13: Register Overview

Register	Offset	Description	
CODEPAGESIZE	0x010	Code memory page size	
CODESIZE	0x014	Code memory size	
DEVICEID[0]	0x060	Device identifier	
DEVICEID[1]	0x064	Device identifier	
ER[0]	0x080	Encryption Root, word 0	
ER[1]	0x084	Encryption Root, word 1	
ER[2]	0x088	Encryption Root, word 2	
ER[3]	0x08C	Encryption Root, word 3	
IR[0]	0x090	Identity Root, word 0	
IR[1]	0x094	Identity Root, word 1	
IR[2]	0x098	Identity Root, word 2	
IR[3]	0x09C	Identity Root, word 3	
DEVICEADDRTYPE	0x0A0	Device address type	
DEVICEADDR[0]	0x0A4	Device address 0	
DEVICEADDR[1]	0x0A8	Device address 1	
INFO.PART	0x100	Part code	
INFO.VARIANT	0x104	Part Variant, Hardware version and Production configuration	
INFO.PACKAGE	0x108	Package option	
INFO.RAM	0x10C	RAM variant	
INFO.FLASH	0x110	Flash variant	
	0x114		Reserved
	0x118		Reserved
	0x11C		Reserved
TEMP.A0	0x404	Slope definition A0.	
TEMP.A1	0x408	Slope definition A1.	
TEMP.A2	0x40C	Slope definition A2.	
TEMP.A3	0x410	Slope definition A3.	
TEMP.A4	0x414	Slope definition A4.	
TEMP.A5	0x418	Slope definition A5.	
TEMP.B0	0x41C	y-intercept B0.	
TEMP.B1	0x420	y-intercept B1.	
TEMP.B2	0x424	y-intercept B2.	
TEMP.B3	0x428	y-intercept B3.	
TEMP.B4	0x42C	y-intercept B4.	
TEMP.B5	0x430	y-intercept B5.	
TEMP.T0	0x434	Segment end T0.	
TEMP.T1	0x438	Segment end T1.	
TEMP.T2	0x43C	Segment end T2.	
TEMP.T3	0x440	Segment end T3.	
TEMP.T4	0x444	Segment end T4.	

Register	Offset	Description
NFC.TAGHEADER0	0x450	Default header for NFC Tag. Software can read these values to populate NFCID1_3RD_LAST, NFCID1_2ND_LAST and NFCID1_LAST.
NFC.TAGHEADER1	0x454	Default header for NFC Tag. Software can read these values to populate NFCID1_3RD_LAST, NFCID1_2ND_LAST and NFCID1_LAST.
NFC.TAGHEADER2	0x458	Default header for NFC Tag. Software can read these values to populate NFCID1_3RD_LAST, NFCID1_2ND_LAST and NFCID1_LAST.
NFC.TAGHEADER3	0x45C	Default header for NFC Tag. Software can read these values to populate NFCID1_3RD_LAST, NFCID1_2ND_LAST and NFCID1_LAST.

13.1.1 CODEPAGESIZE

Address offset: 0x010

Code memory page size

Bit number				31	30	29	28	27	26	25	24	23	22	21	20	19	18	17	16	15	14	13	12	11	10	9	8	7	6	5	4	3	2	1	0
Id				A	A	A	A	A	A	A	A	A	A	A	A	A	A	A	A	A	A	A	A	A	A	A	A	A	A	A	A	A	A	A	A
Reset 0xFFFFFFFF				**1**	**1**	**1**	**1**	**1**	**1**	**1**	**1**	**1**	**1**	**1**	**1**	**1**	**1**	**1**	**1**	**1**	**1**	**1**	**1**	**1**	**1**	**1**	**1**	**1**	**1**	**1**	**1**	**1**	**1**	**1**	**1**
Id	**RW**	**Field**	**Value Id**	**Value**								**Description**																							
A	R	CODEPAGESIZE										Code memory page size																							

13.1.2 CODESIZE

Address offset: 0x014

Code memory size

Bit number				31	30	29	28	27	26	25	24	23	22	21	20	19	18	17	16	15	14	13	12	11	10	9	8	7	6	5	4	3	2	1	0
Id				A	A	A	A	A	A	A	A	A	A	A	A	A	A	A	A	A	A	A	A	A	A	A	A	A	A	A	A	A	A	A	A
Reset 0xFFFFFFFF				**1**	**1**	**1**	**1**	**1**	**1**	**1**	**1**	**1**	**1**	**1**	**1**	**1**	**1**	**1**	**1**	**1**	**1**	**1**	**1**	**1**	**1**	**1**	**1**	**1**	**1**	**1**	**1**	**1**	**1**	**1**	**1**
Id	**RW**	**Field**	**Value Id**	**Value**								**Description**																							
A	R	CODESIZE										Code memory size in number of pages Total code space is: CODEPAGESIZE * CODESIZE																							

13.1.3 DEVICEID[0]

Address offset: 0x060

Device identifier

Bit number				31	30	29	28	27	26	25	24	23	22	21	20	19	18	17	16	15	14	13	12	11	10	9	8	7	6	5	4	3	2	1	0
Id				A	A	A	A	A	A	A	A	A	A	A	A	A	A	A	A	A	A	A	A	A	A	A	A	A	A	A	A	A	A	A	A
Reset 0xFFFFFFFF				**1**	**1**	**1**	**1**	**1**	**1**	**1**	**1**	**1**	**1**	**1**	**1**	**1**	**1**	**1**	**1**	**1**	**1**	**1**	**1**	**1**	**1**	**1**	**1**	**1**	**1**	**1**	**1**	**1**	**1**	**1**	**1**
Id	**RW**	**Field**	**Value Id**	**Value**								**Description**																							
A	R	DEVICEID										64 bit unique device identifier DEVICEID[0] contains the least significant bits of the device identifier. DEVICEID[1] contains the most significant bits of the device identifier.																							

13.1.4 DEVICEID[1]

Address offset: 0x064

Device identifier

Bit number				31	30	29	28	27	26	25	24	23	22	21	20	19	18	17	16	15	14	13	12	11	10	9	8	7	6	5	4	3	2	1	0
Id				A	A	A	A	A	A	A	A	A	A	A	A	A	A	A	A	A	A	A	A	A	A	A	A	A	A	A	A	A	A	A	A
Reset 0xFFFFFFFF				**1**	**1**	**1**	**1**	**1**	**1**	**1**	**1**	**1**	**1**	**1**	**1**	**1**	**1**	**1**	**1**	**1**	**1**	**1**	**1**	**1**	**1**	**1**	**1**	**1**	**1**	**1**	**1**	**1**	**1**	**1**	**1**
Id	**RW**	**Field**	**Value Id**	**Value**								**Description**																							
A	R	DEVICEID										64 bit unique device identifier																							

Bit number				31	30	29	28	27	26	25	24	23	22	21	20	19	18	17	16	15	14	13	12	11	10	9	8	7	6	5	4	3	2	1	0
Id				A	A	A	A	A	A	A	A	A	A	A	A	A	A	A	A	A	A	A	A	A	A	A	A	A	A	A	A	A	A	A	A
Reset 0xFFFFFFFF				**1**	**1**	**1**	**1**	**1**	**1**	**1**	**1**	**1**	**1**	**1**	**1**	**1**	**1**	**1**	**1**	**1**	**1**	**1**	**1**	**1**	**1**	**1**	**1**	**1**	**1**	**1**	**1**	**1**	**1**	**1**	**1**
Id	**RW**	**Field**	**Value Id**	**Value**								**Description**																							
												DEVICEID[0] contains the least significant bits of the device identifier. DEVICEID[1] contains the most significant bits of the device identifier.																							

13.1.5 ER[0]

Address offset: 0x080

Encryption Root, word 0

Bit number				31	30	29	28	27	26	25	24	23	22	21	20	19	18	17	16	15	14	13	12	11	10	9	8	7	6	5	4	3	2	1	0
Id				A	A	A	A	A	A	A	A	A	A	A	A	A	A	A	A	A	A	A	A	A	A	A	A	A	A	A	A	A	A	A	A
Reset 0xFFFFFFFF				**1**	**1**	**1**	**1**	**1**	**1**	**1**	**1**	**1**	**1**	**1**	**1**	**1**	**1**	**1**	**1**	**1**	**1**	**1**	**1**	**1**	**1**	**1**	**1**	**1**	**1**	**1**	**1**	**1**	**1**	**1**	**1**
Id	**RW**	**Field**	**Value Id**	**Value**								**Description**																							
A	R	ER										Encryption Root, word n																							

13.1.6 ER[1]

Address offset: 0x084

Encryption Root, word 1

Bit number				31	30	29	28	27	26	25	24	23	22	21	20	19	18	17	16	15	14	13	12	11	10	9	8	7	6	5	4	3	2	1	0
Id				A	A	A	A	A	A	A	A	A	A	A	A	A	A	A	A	A	A	A	A	A	A	A	A	A	A	A	A	A	A	A	A
Reset 0xFFFFFFFF				**1**	**1**	**1**	**1**	**1**	**1**	**1**	**1**	**1**	**1**	**1**	**1**	**1**	**1**	**1**	**1**	**1**	**1**	**1**	**1**	**1**	**1**	**1**	**1**	**1**	**1**	**1**	**1**	**1**	**1**	**1**	**1**
Id	**RW**	**Field**	**Value Id**	**Value**								**Description**																							
A	R	ER										Encryption Root, word n																							

13.1.7 ER[2]

Address offset: 0x088

Encryption Root, word 2

Bit number				31	30	29	28	27	26	25	24	23	22	21	20	19	18	17	16	15	14	13	12	11	10	9	8	7	6	5	4	3	2	1	0
Id				A	A	A	A	A	A	A	A	A	A	A	A	A	A	A	A	A	A	A	A	A	A	A	A	A	A	A	A	A	A	A	A
Reset 0xFFFFFFFF				**1**	**1**	**1**	**1**	**1**	**1**	**1**	**1**	**1**	**1**	**1**	**1**	**1**	**1**	**1**	**1**	**1**	**1**	**1**	**1**	**1**	**1**	**1**	**1**	**1**	**1**	**1**	**1**	**1**	**1**	**1**	**1**
Id	**RW**	**Field**	**Value Id**	**Value**								**Description**																							
A	R	ER										Encryption Root, word n																							

13.1.8 ER[3]

Address offset: 0x08C

Encryption Root, word 3

Bit number				31	30	29	28	27	26	25	24	23	22	21	20	19	18	17	16	15	14	13	12	11	10	9	8	7	6	5	4	3	2	1	0
Id				A	A	A	A	A	A	A	A	A	A	A	A	A	A	A	A	A	A	A	A	A	A	A	A	A	A	A	A	A	A	A	A
Reset 0xFFFFFFFF				**1**	**1**	**1**	**1**	**1**	**1**	**1**	**1**	**1**	**1**	**1**	**1**	**1**	**1**	**1**	**1**	**1**	**1**	**1**	**1**	**1**	**1**	**1**	**1**	**1**	**1**	**1**	**1**	**1**	**1**	**1**	**1**
Id	**RW**	**Field**	**Value Id**	**Value**								**Description**																							
A	R	ER										Encryption Root, word n																							

13.1.9 IR[0]

Address offset: 0x090

Identity Root, word 0

Bit number				31	30	29	28	27	26	25	24	23	22	21	20	19	18	17	16	15	14	13	12	11	10	9	8	7	6	5	4	3	2	1	0
Id				A	A	A	A	A	A	A	A	A	A	A	A	A	A	A	A	A	A	A	A	A	A	A	A	A	A	A	A	A	A	A	A
Reset 0xFFFFFFFF				**1**	**1**	**1**	**1**	**1**	**1**	**1**	**1**	**1**	**1**	**1**	**1**	**1**	**1**	**1**	**1**	**1**	**1**	**1**	**1**	**1**	**1**	**1**	**1**	**1**	**1**	**1**	**1**	**1**	**1**	**1**	**1**
Id	**RW**	**Field**	**Value Id**	**Value**								**Description**																							
A	R	IR										Identity Root, word n																							

13.1.10 IR[1]

Address offset: 0x094

Identity Root, word 1

Bit number				31	30	29	28	27	26	25	24	23	22	21	20	19	18	17	16	15	14	13	12	11	10	9	8	7	6	5	4	3	2	1	0
Id				A	A	A	A	A	A	A	A	A	A	A	A	A	A	A	A	A	A	A	A	A	A	A	A	A	A	A	A	A	A	A	A
Reset 0xFFFFFFFF				**1**	**1**	**1**	**1**	**1**	**1**	**1**	**1**	**1**	**1**	**1**	**1**	**1**	**1**	**1**	**1**	**1**	**1**	**1**	**1**	**1**	**1**	**1**	**1**	**1**	**1**	**1**	**1**	**1**	**1**	**1**	**1**
Id	**RW**	**Field**	**Value Id**	**Value**								**Description**																							
A	R	IR										Identity Root, word n																							

13.1.11 IR[2]

Address offset: 0x098

Identity Root, word 2

Bit number				31	30	29	28	27	26	25	24	23	22	21	20	19	18	17	16	15	14	13	12	11	10	9	8	7	6	5	4	3	2	1	0
Id				A	A	A	A	A	A	A	A	A	A	A	A	A	A	A	A	A	A	A	A	A	A	A	A	A	A	A	A	A	A	A	A
Reset 0xFFFFFFFF				**1**	**1**	**1**	**1**	**1**	**1**	**1**	**1**	**1**	**1**	**1**	**1**	**1**	**1**	**1**	**1**	**1**	**1**	**1**	**1**	**1**	**1**	**1**	**1**	**1**	**1**	**1**	**1**	**1**	**1**	**1**	**1**
Id	**RW**	**Field**	**Value Id**	**Value**								**Description**																							
A	R	IR										Identity Root, word n																							

13.1.12 IR[3]

Address offset: 0x09C

Identity Root, word 3

Bit number				31	30	29	28	27	26	25	24	23	22	21	20	19	18	17	16	15	14	13	12	11	10	9	8	7	6	5	4	3	2	1	0
Id				A	A	A	A	A	A	A	A	A	A	A	A	A	A	A	A	A	A	A	A	A	A	A	A	A	A	A	A	A	A	A	A
Reset 0xFFFFFFFF				**1**	**1**	**1**	**1**	**1**	**1**	**1**	**1**	**1**	**1**	**1**	**1**	**1**	**1**	**1**	**1**	**1**	**1**	**1**	**1**	**1**	**1**	**1**	**1**	**1**	**1**	**1**	**1**	**1**	**1**	**1**	**1**
Id	**RW**	**Field**	**Value Id**	**Value**								**Description**																							
A	R	IR										Identity Root, word n																							

13.1.13 DEVICEADDRTYPE

Address offset: 0x0A0

Device address type

Bit number				31	30	29	28	27	26	25	24	23	22	21	20	19	18	17	16	15	14	13	12	11	10	9	8	7	6	5	4	3	2	1	0
Id																																			A
Reset 0xFFFFFFFF				**1**	**1**	**1**	**1**	**1**	**1**	**1**	**1**	**1**	**1**	**1**	**1**	**1**	**1**	**1**	**1**	**1**	**1**	**1**	**1**	**1**	**1**	**1**	**1**	**1**	**1**	**1**	**1**	**1**	**1**	**1**	**1**
Id	**RW**	**Field**	**Value Id**	**Value**								**Description**																							
A	R	DEVICEADDRTYPE										Device address type																							
			Public	0								Public address																							
			Random	1								Random address																							

13.1.14 DEVICEADDR[0]

Address offset: 0x0A4

Device address 0

Bit number				31	30	29	28	27	26	25	24	23	22	21	20	19	18	17	16	15	14	13	12	11	10	9	8	7	6	5	4	3	2	1	0
Id				A	A	A	A	A	A	A	A	A	A	A	A	A	A	A	A	A	A	A	A	A	A	A	A	A	A	A	A	A	A	A	A
Reset 0xFFFFFFFF				**1**	**1**	**1**	**1**	**1**	**1**	**1**	**1**	**1**	**1**	**1**	**1**	**1**	**1**	**1**	**1**	**1**	**1**	**1**	**1**	**1**	**1**	**1**	**1**	**1**	**1**	**1**	**1**	**1**	**1**	**1**	**1**
Id	**RW**	**Field**	**Value Id**	**Value**								**Description**																							
A	R	DEVICEADDR										48 bit device address DEVICEADDR[0] contains the least significant bits of the device address. DEVICEADDR[1] contains the most significant bits of the device address. Only bits [15:0] of DEVICEADDR[1] are used.																									

13.1.15 DEVICEADDR[1]

Address offset: 0x0A8

Device address 1

Bit number				31	30	29	28	27	26	25	24	23	22	21	20	19	18	17	16	15	14	13	12	11	10	9	8	7	6	5	4	3	2	1	0
Id				A	A	A	A	A	A	A	A	A	A	A	A	A	A	A	A	A	A	A	A	A	A	A	A	A	A	A	A	A	A	A	A
Reset 0xFFFFFFFF				**1**	**1**	**1**	**1**	**1**	**1**	**1**	**1**	**1**	**1**	**1**	**1**	**1**	**1**	**1**	**1**	**1**	**1**	**1**	**1**	**1**	**1**	**1**	**1**	**1**	**1**	**1**	**1**	**1**	**1**	**1**	**1**
Id	**RW**	**Field**	**Value Id**	**Value**								**Description**																							
A	R	DEVICEADDR										48 bit device address DEVICEADDR[0] contains the least significant bits of the device address. DEVICEADDR[1] contains the most significant bits of the device address. Only bits [15:0] of DEVICEADDR[1] are used.																									

13.1.16 INFO.PART

Address offset: 0x100

Part code

Bit number				31	30	29	28	27	26	25	24	23	22	21	20	19	18	17	16	15	14	13	12	11	10	9	8	7	6	5	4	3	2	1	0
Id				A	A	A	A	A	A	A	A	A	A	A	A	A	A	A	A	A	A	A	A	A	A	A	A	A	A	A	A	A	A	A	A
Reset 0x00052832				**0**	**0**	**0**	**0**	**0**	**0**	**0**	**0**	**0**	**0**	**0**	**0**	**0**	**1**	**0**	**1**	**0**	**0**	**1**	**0**	**1**	**0**	**0**	**0**	**0**	**0**	**1**	**1**	**0**	**0**	**1**	**0**
Id	**RW**	**Field**	**Value Id**	**Value**								**Description**																							
A	R	PART										Part code																							
			N52832	0x52832								nRF52832																							
			Unspecified	0xFFFFFFFF								Unspecified																							

13.1.17 INFO.VARIANT

Address offset: 0x104

Part Variant, Hardware version and Production configuration

Bit number				31	30	29	28	27	26	25	24	23	22	21	20	19	18	17	16	15	14	13	12	11	10	9	8	7	6	5	4	3	2	1	0
Id				A	A	A	A	A	A	A	A	A	A	A	A	A	A	A	A	A	A	A	A	A	A	A	A	A	A	A	A	A	A	A	A
Reset 0x41414142				**0**	**1**	**0**	**0**	**0**	**0**	**0**	**1**	**0**	**1**	**0**	**0**	**0**	**0**	**0**	**1**	**0**	**1**	**0**	**0**	**0**	**0**	**0**	**1**	**0**	**1**	**0**	**0**	**0**	**0**	**1**	**0**
Id	**RW**	**Field**	**Value Id**	**Value**								**Description**																							
A	R	VARIANT										Part Variant, Hardware version and Production configuration, encoded as ASCII																							
			AAAA	0x41414141								AAAA																							
			AAAB	0x41414142								AAAB																							
			AABA	0x41414241								AABA																							
			AABB	0x41414242								AABB																							
			Unspecified	0xFFFFFFFF								Unspecified																							

13.1.18 INFO.PACKAGE

Address offset: 0x108

Package option

Bit number				31	30	29	28	27	26	25	24	23	22	21	20	19	18	17	16	15	14	13	12	11	10	9	8	7	6	5	4	3	2	1	0
Id				A	A	A	A	A	A	A	A	A	A	A	A	A	A	A	A	A	A	A	A	A	A	A	A	A	A	A	A	A	A	A	A
Reset 0x00002000				**0**	**0**	**0**	**0**	**0**	**0**	**0**	**0**	**0**	**0**	**0**	**0**	**0**	**0**	**0**	**0**	**0**	**0**	**1**	**0**	**0**	**0**	**0**	**0**	**0**	**0**	**0**	**0**	**0**	**0**	**0**	**0**
Id	**RW**	**Field**	**Value Id**	**Value**																						**Description**									
A	R	PACKAGE																								Package option									
			QF	0x2000																						QFxx - 48-pin QFN									
			CH	0x2001																						CHxx - 7x8 WLCSP 56 balls									
			Unspecified	0xFFFFFFFF																						Unspecified									

13.1.19 INFO.RAM

Address offset: 0x10C

RAM variant

Bit number				31	30	29	28	27	26	25	24	23	22	21	20	19	18	17	16	15	14	13	12	11	10	9	8	7	6	5	4	3	2	1	0
Id				A	A	A	A	A	A	A	A	A	A	A	A	A	A	A	A	A	A	A	A	A	A	A	A	A	A	A	A	A	A	A	A
Reset 0x00000040				**0**	**0**	**0**	**0**	**0**	**0**	**0**	**0**	**0**	**0**	**0**	**0**	**0**	**0**	**0**	**0**	**0**	**0**	**0**	**0**	**0**	**0**	**0**	**0**	**0**	**1**	**0**	**0**	**0**	**0**	**0**	**0**
Id	**RW**	**Field**	**Value Id**	**Value**																						**Description**									
A	R	RAM																								RAM variant									
			K16	0x10																						16 kByte RAM									
			K32	0x20																						32 kByte RAM									
			K64	0x40																						64 kByte RAM									
			Unspecified	0xFFFFFFFF																						Unspecified									

13.1.20 INFO.FLASH

Address offset: 0x110

Flash variant

Bit number				31	30	29	28	27	26	25	24	23	22	21	20	19	18	17	16	15	14	13	12	11	10	9	8	7	6	5	4	3	2	1	0
Id				A	A	A	A	A	A	A	A	A	A	A	A	A	A	A	A	A	A	A	A	A	A	A	A	A	A	A	A	A	A	A	A
Reset 0x00000200				**0**	**0**	**0**	**0**	**0**	**0**	**0**	**0**	**0**	**0**	**0**	**0**	**0**	**0**	**0**	**0**	**0**	**0**	**0**	**0**	**0**	**0**	**1**	**0**	**0**	**0**	**0**	**0**	**0**	**0**	**0**	**0**
Id	**RW**	**Field**	**Value Id**	**Value**																						**Description**									
A	R	FLASH																								Flash variant									
			K128	0x80																						128 kByte FLASH									
			K256	0x100																						256 kByte FLASH									
			K512	0x200																						512 kByte FLASH									
			Unspecified	0xFFFFFFFF																						Unspecified									

13.1.21 TEMP.A0

Address offset: 0x404

Slope definition A0.

Bit number				31	30	29	28	27	26	25	24	23	22	21	20	19	18	17	16	15	14	13	12	11	10	9	8	7	6	5	4	3	2	1	0
Id																								A	A	A	A	A	A	A	A	A	A	A	A
Reset 0x00000320				**0**	**0**	**0**	**0**	**0**	**0**	**0**	**0**	**0**	**0**	**0**	**0**	**0**	**0**	**0**	**0**	**0**	**0**	**0**	**0**	**0**	**0**	**1**	**1**	**0**	**0**	**1**	**0**	**0**	**0**	**0**	**0**
Id	**RW**	**Field**	**Value Id**	**Value**																						**Description**									
A	R	A																								A (slope definition) register.									

13.1.22 TEMP.A1

Address offset: 0x408

Slope definition A1.

Bit number	31	30	29	28	27	26	25	24	23	22	21	20	19	18	17	16	15	14	13	12	11	10	9	8	7	6	5	4	3	2	1	0
Id																					A	A	A	A	A	A	A	A	A	A	A	A
Reset 0x00000343	**0**	**0**	**0**	**0**	**0**	**0**	**0**	**0**	**0**	**0**	**0**	**0**	**0**	**0**	**0**	**0**	**0**	**0**	**0**	**0**	**0**	**0**	**1**	**1**	**0**	**1**	**0**	**0**	**0**	**0**	**1**	**1**

Id	RW	Field	Value Id	Value	Description
A	R	A			A (slope definition) register.

13.1.23 TEMP.A2

Address offset: 0x40C

Slope definition A2.

Bit number	31	30	29	28	27	26	25	24	23	22	21	20	19	18	17	16	15	14	13	12	11	10	9	8	7	6	5	4	3	2	1	0
Id																					A	A	A	A	A	A	A	A	A	A	A	A
Reset 0x0000035D	**0**	**0**	**0**	**0**	**0**	**0**	**0**	**0**	**0**	**0**	**0**	**0**	**0**	**0**	**0**	**0**	**0**	**0**	**0**	**0**	**0**	**0**	**1**	**1**	**0**	**1**	**0**	**1**	**1**	**1**	**0**	**1**

Id	RW	Field	Value Id	Value	Description
A	R	A			A (slope definition) register.

13.1.24 TEMP.A3

Address offset: 0x410

Slope definition A3.

Bit number	31	30	29	28	27	26	25	24	23	22	21	20	19	18	17	16	15	14	13	12	11	10	9	8	7	6	5	4	3	2	1	0
Id																					A	A	A	A	A	A	A	A	A	A	A	A
Reset 0x00000400	**0**	**0**	**0**	**0**	**0**	**0**	**0**	**0**	**0**	**0**	**0**	**0**	**0**	**0**	**0**	**0**	**0**	**0**	**0**	**0**	**0**	**1**	**0**	**0**	**0**	**0**	**0**	**0**	**0**	**0**	**0**	**0**

Id	RW	Field	Value Id	Value	Description
A	R	A			A (slope definition) register.

13.1.25 TEMP.A4

Address offset: 0x414

Slope definition A4.

Bit number	31	30	29	28	27	26	25	24	23	22	21	20	19	18	17	16	15	14	13	12	11	10	9	8	7	6	5	4	3	2	1	0
Id																					A	A	A	A	A	A	A	A	A	A	A	A
Reset 0x00000452	**0**	**0**	**0**	**0**	**0**	**0**	**0**	**0**	**0**	**0**	**0**	**0**	**0**	**0**	**0**	**0**	**0**	**0**	**0**	**0**	**0**	**1**	**0**	**0**	**0**	**1**	**0**	**1**	**0**	**0**	**1**	**0**

Id	RW	Field	Value Id	Value	Description
A	R	A			A (slope definition) register.

13.1.26 TEMP.A5

Address offset: 0x418

Slope definition A5.

Bit number	31	30	29	28	27	26	25	24	23	22	21	20	19	18	17	16	15	14	13	12	11	10	9	8	7	6	5	4	3	2	1	0
Id																					A	A	A	A	A	A	A	A	A	A	A	A
Reset 0x0000037B	**0**	**0**	**0**	**0**	**0**	**0**	**0**	**0**	**0**	**0**	**0**	**0**	**0**	**0**	**0**	**0**	**0**	**0**	**0**	**0**	**0**	**0**	**1**	**1**	**0**	**1**	**1**	**1**	**1**	**0**	**1**	**1**

Id	RW	Field	Value Id	Value	Description
A	R	A			A (slope definition) register.

13.1.27 TEMP.B0

Address offset: 0x41C

y-intercept B0.

Bit number	31	30	29	28	27	26	25	24	23	22	21	20	19	18	17	16	15	14	13	12	11	10	9	8	7	6	5	4	3	2	1	0
Id																			A	A	A	A	A	A	A	A	A	A	A	A	A	A
Reset 0x00003FCC	**0**	**0**	**0**	**0**	**0**	**0**	**0**	**0**	**0**	**0**	**0**	**0**	**0**	**0**	**0**	**0**	**0**	**0**	**1**	**1**	**1**	**1**	**1**	**1**	**1**	**1**	**0**	**0**	**1**	**1**	**0**	**0**

Id	RW	Field	Value Id	Value	Description
A	R	B			B (y-intercept)

13.1.28 TEMP.B1

Address offset: 0x420

y-intercept B1.

Bit number	31	30	29	28	27	26	25	24	23	22	21	20	19	18	17	16	15	14	13	12	11	10	9	8	7	6	5	4	3	2	1	0
Id																			A	A	A	A	A	A	A	A	A	A	A	A	A	A
Reset 0x00003F98	**0**	**0**	**0**	**0**	**0**	**0**	**0**	**0**	**0**	**0**	**0**	**0**	**0**	**0**	**0**	**0**	**0**	**0**	**1**	**1**	**1**	**1**	**1**	**1**	**1**	**0**	**0**	**1**	**1**	**0**	**0**	**0**

Id	RW	Field	Value Id	Value	Description
A	R	B			B (y-intercept)

13.1.29 TEMP.B2

Address offset: 0x424

y-intercept B2.

Bit number	31	30	29	28	27	26	25	24	23	22	21	20	19	18	17	16	15	14	13	12	11	10	9	8	7	6	5	4	3	2	1	0
Id																			A	A	A	A	A	A	A	A	A	A	A	A	A	A
Reset 0x00003F98	**0**	**0**	**0**	**0**	**0**	**0**	**0**	**0**	**0**	**0**	**0**	**0**	**0**	**0**	**0**	**0**	**0**	**0**	**1**	**1**	**1**	**1**	**1**	**1**	**1**	**0**	**0**	**1**	**1**	**0**	**0**	**0**

Id	RW	Field	Value Id	Value	Description
A	R	B			B (y-intercept)

13.1.30 TEMP.B3

Address offset: 0x428

y-intercept B3.

Bit number	31	30	29	28	27	26	25	24	23	22	21	20	19	18	17	16	15	14	13	12	11	10	9	8	7	6	5	4	3	2	1	0
Id																			A	A	A	A	A	A	A	A	A	A	A	A	A	A
Reset 0x00000012	**0**	**0**	**0**	**0**	**0**	**0**	**0**	**0**	**0**	**0**	**0**	**0**	**0**	**0**	**0**	**0**	**0**	**0**	**0**	**0**	**0**	**0**	**0**	**0**	**0**	**0**	**0**	**1**	**0**	**0**	**1**	**0**

Id	RW	Field	Value Id	Value	Description
A	R	B			B (y-intercept)

13.1.31 TEMP.B4

Address offset: 0x42C

y-intercept B4.

Bit number	31	30	29	28	27	26	25	24	23	22	21	20	19	18	17	16	15	14	13	12	11	10	9	8	7	6	5	4	3	2	1	0
Id																			A	A	A	A	A	A	A	A	A	A	A	A	A	A
Reset 0x0000004D	**0**	**0**	**0**	**0**	**0**	**0**	**0**	**0**	**0**	**0**	**0**	**0**	**0**	**0**	**0**	**0**	**0**	**0**	**0**	**0**	**0**	**0**	**0**	**0**	**0**	**1**	**0**	**0**	**1**	**1**	**0**	**1**

Id	RW	Field	Value Id	Value	Description
A	R	B			B (y-intercept)

13.1.32 TEMP.B5

Address offset: 0x430

y-intercept B5.

Bit number	31	30	29	28	27	26	25	24	23	22	21	20	19	18	17	16	15	14	13	12	11	10	9	8	7	6	5	4	3	2	1	0
Id																			A	A	A	A	A	A	A	A	A	A	A	A	A	A
Reset 0x00003E10	**0**	**0**	**0**	**0**	**0**	**0**	**0**	**0**	**0**	**0**	**0**	**0**	**0**	**0**	**0**	**0**	**0**	**0**	**1**	**1**	**1**	**1**	**1**	**0**	**0**	**0**	**0**	**1**	**0**	**0**	**0**	**0**

Id	RW	Field	Value Id	Value	Description
A	R	B			B (y-intercept)

13.1.33 TEMP.T0

Address offset: 0x434

Segment end T0.

Bit number	31	30	29	28	27	26	25	24	23	22	21	20	19	18	17	16	15	14	13	12	11	10	9	8	7	6	5	4	3	2	1	0
Id																									A	A	A	A	A	A	A	A
Reset 0x000000E2	**0**	**0**	**0**	**0**	**0**	**0**	**0**	**0**	**0**	**0**	**0**	**0**	**0**	**0**	**0**	**0**	**0**	**0**	**0**	**0**	**0**	**0**	**0**	**0**	**1**	**1**	**1**	**0**	**0**	**0**	**1**	**0**

Id	RW	Field	Value Id	Value	Description
A	R	T			T (segment end)register.

13.1.34 TEMP.T1

Address offset: 0x438

Segment end T1.

Bit number	31	30	29	28	27	26	25	24	23	22	21	20	19	18	17	16	15	14	13	12	11	10	9	8	7	6	5	4	3	2	1	0
Id																									A	A	A	A	A	A	A	A
Reset 0x00000000	**0**	**0**	**0**	**0**	**0**	**0**	**0**	**0**	**0**	**0**	**0**	**0**	**0**	**0**	**0**	**0**	**0**	**0**	**0**	**0**	**0**	**0**	**0**	**0**	**0**	**0**	**0**	**0**	**0**	**0**	**0**	**0**

Id	RW	Field	Value Id	Value	Description
A	R	T			T (segment end)register.

13.1.35 TEMP.T2

Address offset: 0x43C

Segment end T2.

Bit number	31	30	29	28	27	26	25	24	23	22	21	20	19	18	17	16	15	14	13	12	11	10	9	8	7	6	5	4	3	2	1	0
Id																									A	A	A	A	A	A	A	A
Reset 0x00000014	**0**	**0**	**0**	**0**	**0**	**0**	**0**	**0**	**0**	**0**	**0**	**0**	**0**	**0**	**0**	**0**	**0**	**0**	**0**	**0**	**0**	**0**	**0**	**0**	**0**	**0**	**0**	**1**	**0**	**1**	**0**	**0**

Id	RW	Field	Value Id	Value	Description
A	R	T			T (segment end)register.

13.1.36 TEMP.T3

Address offset: 0x440

Segment end T3.

Bit number	31	30	29	28	27	26	25	24	23	22	21	20	19	18	17	16	15	14	13	12	11	10	9	8	7	6	5	4	3	2	1	0
Id																									A	A	A	A	A	A	A	A
Reset 0x00000019	**0**	**0**	**0**	**0**	**0**	**0**	**0**	**0**	**0**	**0**	**0**	**0**	**0**	**0**	**0**	**0**	**0**	**0**	**0**	**0**	**0**	**0**	**0**	**0**	**0**	**0**	**0**	**1**	**1**	**0**	**0**	**1**

Id	RW	Field	Value Id	Value	Description
A	R	T			T (segment end)register.

13.1.37 TEMP.T4

Address offset: 0x444

Segment end T4.

Bit number				31	30	29	28	27	26	25	24	23	22	21	20	19	18	17	16	15	14	13	12	11	10	9	8	7	6	5	4	3	2	1	0
Id																												A	A	A	A	A	A	A	A
Reset 0x00000050				**0**	**0**	**0**	**0**	**0**	**0**	**0**	**0**	**0**	**0**	**0**	**0**	**0**	**0**	**0**	**0**	**0**	**0**	**0**	**0**	**0**	**0**	**0**	**0**	**0**	**1**	**0**	**1**	**0**	**0**	**0**	**0**
Id	**RW**	**Field**	**Value Id**	**Value**								**Description**																							
A	R	T										T (segment end)register.																							

13.1.38 NFC.TAGHEADER0

Address offset: 0x450

Default header for NFC Tag. Software can read these values to populate NFCID1_3RD_LAST, NFCID1_2ND_LAST and NFCID1_LAST.

Bit number				31	30	29	28	27	26	25	24	23	22	21	20	19	18	17	16	15	14	13	12	11	10	9	8	7	6	5	4	3	2	1	0
Id				D	D	D	D	D	D	D	D	C	C	C	C	C	C	C	C	B	B	B	B	B	B	B	B	A	A	A	A	A	A	A	A
Reset 0xFFFFFF5F				**1**	**1**	**1**	**1**	**1**	**1**	**1**	**1**	**1**	**1**	**1**	**1**	**1**	**1**	**1**	**1**	**1**	**1**	**1**	**1**	**1**	**1**	**1**	**1**	**0**	**1**	**0**	**1**	**1**	**1**	**1**	**1**
Id	**RW**	**Field**	**Value Id**	**Value**								**Description**																							
A	R	MFGID										Default Manufacturer ID: Nordic Semiconductor ASA has ICM 0x5F																							
B	R	UD1										Unique identifier byte 1																							
C	R	UD2										Unique identifier byte 2																							
D	R	UD3										Unique identifier byte 3																							

13.1.39 NFC.TAGHEADER1

Address offset: 0x454

Default header for NFC Tag. Software can read these values to populate NFCID1_3RD_LAST, NFCID1_2ND_LAST and NFCID1_LAST.

Bit number				31	30	29	28	27	26	25	24	23	22	21	20	19	18	17	16	15	14	13	12	11	10	9	8	7	6	5	4	3	2	1	0
Id				D	D	D	D	D	D	D	D	C	C	C	C	C	C	C	C	B	B	B	B	B	B	B	B	A	A	A	A	A	A	A	A
Reset 0xFFFFFFFF				**1**	**1**	**1**	**1**	**1**	**1**	**1**	**1**	**1**	**1**	**1**	**1**	**1**	**1**	**1**	**1**	**1**	**1**	**1**	**1**	**1**	**1**	**1**	**1**	**1**	**1**	**1**	**1**	**1**	**1**	**1**	**1**
Id	**RW**	**Field**	**Value Id**	**Value**								**Description**																							
A	R	UD4										Unique identifier byte 4																							
B	R	UD5										Unique identifier byte 5																							
C	R	UD6										Unique identifier byte 6																							
D	R	UD7										Unique identifier byte 7																							

13.1.40 NFC.TAGHEADER2

Address offset: 0x458

Default header for NFC Tag. Software can read these values to populate NFCID1_3RD_LAST, NFCID1_2ND_LAST and NFCID1_LAST.

Bit number				31	30	29	28	27	26	25	24	23	22	21	20	19	18	17	16	15	14	13	12	11	10	9	8	7	6	5	4	3	2	1	0
Id				D	D	D	D	D	D	D	D	C	C	C	C	C	C	C	C	B	B	B	B	B	B	B	B	A	A	A	A	A	A	A	A
Reset 0xFFFFFFFF				**1**	**1**	**1**	**1**	**1**	**1**	**1**	**1**	**1**	**1**	**1**	**1**	**1**	**1**	**1**	**1**	**1**	**1**	**1**	**1**	**1**	**1**	**1**	**1**	**1**	**1**	**1**	**1**	**1**	**1**	**1**	**1**
Id	**RW**	**Field**	**Value Id**	**Value**								**Description**																							
A	R	UD8										Unique identifier byte 8																							
B	R	UD9										Unique identifier byte 9																							
C	R	UD10										Unique identifier byte 10																							
D	R	UD11										Unique identifier byte 11																							

13.1.41 NFC.TAGHEADER3

Address offset: 0x45C

Default header for NFC Tag. Software can read these values to populate NFCID1_3RD_LAST, NFCID1_2ND_LAST and NFCID1_LAST.

Bit number				31	30	29	28	27	26	25	24	23	22	21	20	19	18	17	16	15	14	13	12	11	10	9	8	7	6	5	4	3	2	1	0
Id				D	D	D	D	D	D	D	D	C	C	C	C	C	C	C	C	B	B	B	B	B	B	B	B	A	A	A	A	A	A	A	A
Reset 0xFFFFFFFF				**1**	**1**	**1**	**1**	**1**	**1**	**1**	**1**	**1**	**1**	**1**	**1**	**1**	**1**	**1**	**1**	**1**	**1**	**1**	**1**	**1**	**1**	**1**	**1**	**1**	**1**	**1**	**1**	**1**	**1**	**1**	**1**
Id	**RW**	**Field**	**Value Id**	**Value**								**Description**																							
A	R	UD12										Unique identifier byte 12																							
B	R	UD13										Unique identifier byte 13																							
C	R	UD14										Unique identifier byte 14																							
D	R	UD15										Unique identifier byte 15																							

14 UICR — User information configuration registers

The user information configuration registers (UICRs) are non-volatile memory (NVM) registers for configuring user specific settings.

For information on writing UICR registers, see the *NVMC — Non-volatile memory controller* on page 26 and *Memory* on page 20 chapters.

14.1 Registers

Table 14: Instances

Base address	Peripheral	Instance	Description	Configuration
0x10001000	UICR	UICR	User Information Configuration	

Table 15: Register Overview

Register	Offset	Description	
	0x000		Reserved
	0x004		Reserved
	0x008		Reserved
	0x010		Reserved
NRFFW[0]	0x014	Reserved for Nordic firmware design	
NRFFW[1]	0x018	Reserved for Nordic firmware design	
NRFFW[2]	0x01C	Reserved for Nordic firmware design	
NRFFW[3]	0x020	Reserved for Nordic firmware design	
NRFFW[4]	0x024	Reserved for Nordic firmware design	
NRFFW[5]	0x028	Reserved for Nordic firmware design	
NRFFW[6]	0x02C	Reserved for Nordic firmware design	
NRFFW[7]	0x030	Reserved for Nordic firmware design	
NRFFW[8]	0x034	Reserved for Nordic firmware design	
NRFFW[9]	0x038	Reserved for Nordic firmware design	
NRFFW[10]	0x03C	Reserved for Nordic firmware design	
NRFFW[11]	0x040	Reserved for Nordic firmware design	
NRFFW[12]	0x044	Reserved for Nordic firmware design	
NRFFW[13]	0x048	Reserved for Nordic firmware design	
NRFFW[14]	0x04C	Reserved for Nordic firmware design	
NRFHW[0]	0x050	Reserved for Nordic hardware design	
NRFHW[1]	0x054	Reserved for Nordic hardware design	
NRFHW[2]	0x058	Reserved for Nordic hardware design	
NRFHW[3]	0x05C	Reserved for Nordic hardware design	
NRFHW[4]	0x060	Reserved for Nordic hardware design	
NRFHW[5]	0x064	Reserved for Nordic hardware design	
NRFHW[6]	0x068	Reserved for Nordic hardware design	
NRFHW[7]	0x06C	Reserved for Nordic hardware design	
NRFHW[8]	0x070	Reserved for Nordic hardware design	
NRFHW[9]	0x074	Reserved for Nordic hardware design	
NRFHW[10]	0x078	Reserved for Nordic hardware design	
NRFHW[11]	0x07C	Reserved for Nordic hardware design	
CUSTOMER[0]	0x080	Reserved for customer	
CUSTOMER[1]	0x084	Reserved for customer	
CUSTOMER[2]	0x088	Reserved for customer	
CUSTOMER[3]	0x08C	Reserved for customer	
CUSTOMER[4]	0x090	Reserved for customer	
CUSTOMER[5]	0x094	Reserved for customer	
CUSTOMER[6]	0x098	Reserved for customer	

Register	Offset	Description
CUSTOMER[7]	0x09C	Reserved for customer
CUSTOMER[8]	0x0A0	Reserved for customer
CUSTOMER[9]	0x0A4	Reserved for customer
CUSTOMER[10]	0x0A8	Reserved for customer
CUSTOMER[11]	0x0AC	Reserved for customer
CUSTOMER[12]	0x0B0	Reserved for customer
CUSTOMER[13]	0x0B4	Reserved for customer
CUSTOMER[14]	0x0B8	Reserved for customer
CUSTOMER[15]	0x0BC	Reserved for customer
CUSTOMER[16]	0x0C0	Reserved for customer
CUSTOMER[17]	0x0C4	Reserved for customer
CUSTOMER[18]	0x0C8	Reserved for customer
CUSTOMER[19]	0x0CC	Reserved for customer
CUSTOMER[20]	0x0D0	Reserved for customer
CUSTOMER[21]	0x0D4	Reserved for customer
CUSTOMER[22]	0x0D8	Reserved for customer
CUSTOMER[23]	0x0DC	Reserved for customer
CUSTOMER[24]	0x0E0	Reserved for customer
CUSTOMER[25]	0x0E4	Reserved for customer
CUSTOMER[26]	0x0E8	Reserved for customer
CUSTOMER[27]	0x0EC	Reserved for customer
CUSTOMER[28]	0x0F0	Reserved for customer
CUSTOMER[29]	0x0F4	Reserved for customer
CUSTOMER[30]	0x0F8	Reserved for customer
CUSTOMER[31]	0x0FC	Reserved for customer
PSELRESET[0]	0x200	Mapping of the nRESET function (see POWER chapter for details)
PSELRESET[1]	0x204	Mapping of the nRESET function (see POWER chapter for details)
APPROTECT	0x208	Access Port protection
NFCPINS	0x20C	Setting of pins dedicated to NFC functionality: NFC antenna or GPIO

14.1.1 NRFFW[0]

Address offset: 0x014

Reserved for Nordic firmware design

Bit number	31	30	29	28	27	26	25	24	23	22	21	20	19	18	17	16	15	14	13	12	11	10	9	8	7	6	5	4	3	2	1	0
Id	A	A	A	A	A	A	A	A	A	A	A	A	A	A	A	A	A	A	A	A	A	A	A	A	A	A	A	A	A	A	A	A
Reset 0xFFFFFFFF	**1**	**1**	**1**	**1**	**1**	**1**	**1**	**1**	**1**	**1**	**1**	**1**	**1**	**1**	**1**	**1**	**1**	**1**	**1**	**1**	**1**	**1**	**1**	**1**	**1**	**1**	**1**	**1**	**1**	**1**	**1**	**1**

Id	RW	Field	Value Id	Value	Description
A	RW	NRFFW			Reserved for Nordic firmware design

14.1.2 NRFFW[1]

Address offset: 0x018

Reserved for Nordic firmware design

Bit number	31	30	29	28	27	26	25	24	23	22	21	20	19	18	17	16	15	14	13	12	11	10	9	8	7	6	5	4	3	2	1	0
Id	A	A	A	A	A	A	A	A	A	A	A	A	A	A	A	A	A	A	A	A	A	A	A	A	A	A	A	A	A	A	A	A
Reset 0xFFFFFFFF	**1**	**1**	**1**	**1**	**1**	**1**	**1**	**1**	**1**	**1**	**1**	**1**	**1**	**1**	**1**	**1**	**1**	**1**	**1**	**1**	**1**	**1**	**1**	**1**	**1**	**1**	**1**	**1**	**1**	**1**	**1**	**1**

Id	RW	Field	Value Id	Value	Description
A	RW	NRFFW			Reserved for Nordic firmware design

14.1.3 NRFFW[2]

Address offset: 0x01C

Reserved for Nordic firmware design

Bit number	31	30	29	28	27	26	25	24	23	22	21	20	19	18	17	16	15	14	13	12	11	10	9	8	7	6	5	4	3	2	1	0
Id	A	A	A	A	A	A	A	A	A	A	A	A	A	A	A	A	A	A	A	A	A	A	A	A	A	A	A	A	A	A	A	A
Reset 0xFFFFFFFF	**1**	**1**	**1**	**1**	**1**	**1**	**1**	**1**	**1**	**1**	**1**	**1**	**1**	**1**	**1**	**1**	**1**	**1**	**1**	**1**	**1**	**1**	**1**	**1**	**1**	**1**	**1**	**1**	**1**	**1**	**1**	**1**

Id	RW	Field	Value Id	Value	Description
A	RW	NRFFW			Reserved for Nordic firmware design

14.1.4 NRFFW[3]

Address offset: 0x020

Reserved for Nordic firmware design

Bit number	31	30	29	28	27	26	25	24	23	22	21	20	19	18	17	16	15	14	13	12	11	10	9	8	7	6	5	4	3	2	1	0
Id	A	A	A	A	A	A	A	A	A	A	A	A	A	A	A	A	A	A	A	A	A	A	A	A	A	A	A	A	A	A	A	A
Reset 0xFFFFFFFF	**1**	**1**	**1**	**1**	**1**	**1**	**1**	**1**	**1**	**1**	**1**	**1**	**1**	**1**	**1**	**1**	**1**	**1**	**1**	**1**	**1**	**1**	**1**	**1**	**1**	**1**	**1**	**1**	**1**	**1**	**1**	**1**

Id	RW	Field	Value Id	Value	Description
A	RW	NRFFW			Reserved for Nordic firmware design

14.1.5 NRFFW[4]

Address offset: 0x024

Reserved for Nordic firmware design

Bit number	31	30	29	28	27	26	25	24	23	22	21	20	19	18	17	16	15	14	13	12	11	10	9	8	7	6	5	4	3	2	1	0
Id	A	A	A	A	A	A	A	A	A	A	A	A	A	A	A	A	A	A	A	A	A	A	A	A	A	A	A	A	A	A	A	A
Reset 0xFFFFFFFF	**1**	**1**	**1**	**1**	**1**	**1**	**1**	**1**	**1**	**1**	**1**	**1**	**1**	**1**	**1**	**1**	**1**	**1**	**1**	**1**	**1**	**1**	**1**	**1**	**1**	**1**	**1**	**1**	**1**	**1**	**1**	**1**

Id	RW	Field	Value Id	Value	Description
A	RW	NRFFW			Reserved for Nordic firmware design

14.1.6 NRFFW[5]

Address offset: 0x028

Reserved for Nordic firmware design

Bit number	31	30	29	28	27	26	25	24	23	22	21	20	19	18	17	16	15	14	13	12	11	10	9	8	7	6	5	4	3	2	1	0
Id	A	A	A	A	A	A	A	A	A	A	A	A	A	A	A	A	A	A	A	A	A	A	A	A	A	A	A	A	A	A	A	A
Reset 0xFFFFFFFF	**1**	**1**	**1**	**1**	**1**	**1**	**1**	**1**	**1**	**1**	**1**	**1**	**1**	**1**	**1**	**1**	**1**	**1**	**1**	**1**	**1**	**1**	**1**	**1**	**1**	**1**	**1**	**1**	**1**	**1**	**1**	**1**

Id	RW	Field	Value Id	Value	Description
A	RW	NRFFW			Reserved for Nordic firmware design

14.1.7 NRFFW[6]

Address offset: 0x02C

Reserved for Nordic firmware design

Bit number	31	30	29	28	27	26	25	24	23	22	21	20	19	18	17	16	15	14	13	12	11	10	9	8	7	6	5	4	3	2	1	0
Id	A	A	A	A	A	A	A	A	A	A	A	A	A	A	A	A	A	A	A	A	A	A	A	A	A	A	A	A	A	A	A	A
Reset 0xFFFFFFFF	**1**	**1**	**1**	**1**	**1**	**1**	**1**	**1**	**1**	**1**	**1**	**1**	**1**	**1**	**1**	**1**	**1**	**1**	**1**	**1**	**1**	**1**	**1**	**1**	**1**	**1**	**1**	**1**	**1**	**1**	**1**	**1**

Id	RW	Field	Value Id	Value	Description
A	RW	NRFFW			Reserved for Nordic firmware design

14.1.8 NRFFW[7]

Address offset: 0x030

Reserved for Nordic firmware design

Bit number	31	30	29	28	27	26	25	24	23	22	21	20	19	18	17	16	15	14	13	12	11	10	9	8	7	6	5	4	3	2	1	0
Id	A	A	A	A	A	A	A	A	A	A	A	A	A	A	A	A	A	A	A	A	A	A	A	A	A	A	A	A	A	A	A	A
Reset 0xFFFFFFFF	**1**	**1**	**1**	**1**	**1**	**1**	**1**	**1**	**1**	**1**	**1**	**1**	**1**	**1**	**1**	**1**	**1**	**1**	**1**	**1**	**1**	**1**	**1**	**1**	**1**	**1**	**1**	**1**	**1**	**1**	**1**	**1**

Id	RW	Field	Value Id	Value	Description
A	RW	NRFFW			Reserved for Nordic firmware design

14.1.9 NRFFW[8]

Address offset: 0x034

Reserved for Nordic firmware design

Bit number	31	30	29	28	27	26	25	24	23	22	21	20	19	18	17	16	15	14	13	12	11	10	9	8	7	6	5	4	3	2	1	0
Id	A	A	A	A	A	A	A	A	A	A	A	A	A	A	A	A	A	A	A	A	A	A	A	A	A	A	A	A	A	A	A	A
Reset 0xFFFFFFFF	**1**	**1**	**1**	**1**	**1**	**1**	**1**	**1**	**1**	**1**	**1**	**1**	**1**	**1**	**1**	**1**	**1**	**1**	**1**	**1**	**1**	**1**	**1**	**1**	**1**	**1**	**1**	**1**	**1**	**1**	**1**	**1**

Id	RW	Field	Value Id	Value	Description
A	RW	NRFFW			Reserved for Nordic firmware design

14.1.10 NRFFW[9]

Address offset: 0x038

Reserved for Nordic firmware design

Bit number	31	30	29	28	27	26	25	24	23	22	21	20	19	18	17	16	15	14	13	12	11	10	9	8	7	6	5	4	3	2	1	0
Id	A	A	A	A	A	A	A	A	A	A	A	A	A	A	A	A	A	A	A	A	A	A	A	A	A	A	A	A	A	A	A	A
Reset 0xFFFFFFFF	**1**	**1**	**1**	**1**	**1**	**1**	**1**	**1**	**1**	**1**	**1**	**1**	**1**	**1**	**1**	**1**	**1**	**1**	**1**	**1**	**1**	**1**	**1**	**1**	**1**	**1**	**1**	**1**	**1**	**1**	**1**	**1**

Id	RW	Field	Value Id	Value	Description
A	RW	NRFFW			Reserved for Nordic firmware design

14.1.11 NRFFW[10]

Address offset: 0x03C

Reserved for Nordic firmware design

Bit number	31	30	29	28	27	26	25	24	23	22	21	20	19	18	17	16	15	14	13	12	11	10	9	8	7	6	5	4	3	2	1	0
Id	A	A	A	A	A	A	A	A	A	A	A	A	A	A	A	A	A	A	A	A	A	A	A	A	A	A	A	A	A	A	A	A
Reset 0xFFFFFFFF	**1**	**1**	**1**	**1**	**1**	**1**	**1**	**1**	**1**	**1**	**1**	**1**	**1**	**1**	**1**	**1**	**1**	**1**	**1**	**1**	**1**	**1**	**1**	**1**	**1**	**1**	**1**	**1**	**1**	**1**	**1**	**1**

Id	RW	Field	Value Id	Value	Description
A	RW	NRFFW			Reserved for Nordic firmware design

14.1.12 NRFFW[11]

Address offset: 0x040

Reserved for Nordic firmware design

Bit number	31	30	29	28	27	26	25	24	23	22	21	20	19	18	17	16	15	14	13	12	11	10	9	8	7	6	5	4	3	2	1	0
Id	A	A	A	A	A	A	A	A	A	A	A	A	A	A	A	A	A	A	A	A	A	A	A	A	A	A	A	A	A	A	A	A
Reset 0xFFFFFFFF	**1**	**1**	**1**	**1**	**1**	**1**	**1**	**1**	**1**	**1**	**1**	**1**	**1**	**1**	**1**	**1**	**1**	**1**	**1**	**1**	**1**	**1**	**1**	**1**	**1**	**1**	**1**	**1**	**1**	**1**	**1**	**1**

Id	RW	Field	Value Id	Value	Description
A	RW	NRFFW			Reserved for Nordic firmware design

14.1.13 NRFFW[12]

Address offset: 0x044

Reserved for Nordic firmware design

Bit number	31	30	29	28	27	26	25	24	23	22	21	20	19	18	17	16	15	14	13	12	11	10	9	8	7	6	5	4	3	2	1	0
Id	A	A	A	A	A	A	A	A	A	A	A	A	A	A	A	A	A	A	A	A	A	A	A	A	A	A	A	A	A	A	A	A
Reset 0xFFFFFFFF	**1**	**1**	**1**	**1**	**1**	**1**	**1**	**1**	**1**	**1**	**1**	**1**	**1**	**1**	**1**	**1**	**1**	**1**	**1**	**1**	**1**	**1**	**1**	**1**	**1**	**1**	**1**	**1**	**1**	**1**	**1**	**1**

Id	RW	Field	Value Id	Value	Description
A	RW	NRFFW			Reserved for Nordic firmware design

14.1.14 NRFFW[13]

Address offset: 0x048

Reserved for Nordic firmware design

Bit number	31	30	29	28	27	26	25	24	23	22	21	20	19	18	17	16	15	14	13	12	11	10	9	8	7	6	5	4	3	2	1	0
Id	A	A	A	A	A	A	A	A	A	A	A	A	A	A	A	A	A	A	A	A	A	A	A	A	A	A	A	A	A	A	A	A
Reset 0xFFFFFFFF	**1**	**1**	**1**	**1**	**1**	**1**	**1**	**1**	**1**	**1**	**1**	**1**	**1**	**1**	**1**	**1**	**1**	**1**	**1**	**1**	**1**	**1**	**1**	**1**	**1**	**1**	**1**	**1**	**1**	**1**	**1**	**1**

Id	RW	Field	Value Id	Value	Description
A	RW	NRFFW			Reserved for Nordic firmware design

14.1.15 NRFFW[14]

Address offset: 0x04C

Reserved for Nordic firmware design

Bit number	31	30	29	28	27	26	25	24	23	22	21	20	19	18	17	16	15	14	13	12	11	10	9	8	7	6	5	4	3	2	1	0
Id	A	A	A	A	A	A	A	A	A	A	A	A	A	A	A	A	A	A	A	A	A	A	A	A	A	A	A	A	A	A	A	A
Reset 0xFFFFFFFF	**1**	**1**	**1**	**1**	**1**	**1**	**1**	**1**	**1**	**1**	**1**	**1**	**1**	**1**	**1**	**1**	**1**	**1**	**1**	**1**	**1**	**1**	**1**	**1**	**1**	**1**	**1**	**1**	**1**	**1**	**1**	**1**

Id	RW	Field	Value Id	Value	Description
A	RW	NRFFW			Reserved for Nordic firmware design

14.1.16 NRFHW[0]

Address offset: 0x050

Reserved for Nordic hardware design

Bit number	31	30	29	28	27	26	25	24	23	22	21	20	19	18	17	16	15	14	13	12	11	10	9	8	7	6	5	4	3	2	1	0
Id	A	A	A	A	A	A	A	A	A	A	A	A	A	A	A	A	A	A	A	A	A	A	A	A	A	A	A	A	A	A	A	A
Reset 0xFFFFFFFF	**1**	**1**	**1**	**1**	**1**	**1**	**1**	**1**	**1**	**1**	**1**	**1**	**1**	**1**	**1**	**1**	**1**	**1**	**1**	**1**	**1**	**1**	**1**	**1**	**1**	**1**	**1**	**1**	**1**	**1**	**1**	**1**

Id	RW	Field	Value Id	Value	Description
A	RW	NRFHW			Reserved for Nordic hardware design

14.1.17 NRFHW[1]

Address offset: 0x054

Reserved for Nordic hardware design

Bit number	31	30	29	28	27	26	25	24	23	22	21	20	19	18	17	16	15	14	13	12	11	10	9	8	7	6	5	4	3	2	1	0
Id	A	A	A	A	A	A	A	A	A	A	A	A	A	A	A	A	A	A	A	A	A	A	A	A	A	A	A	A	A	A	A	A
Reset 0xFFFFFFFF	**1**	**1**	**1**	**1**	**1**	**1**	**1**	**1**	**1**	**1**	**1**	**1**	**1**	**1**	**1**	**1**	**1**	**1**	**1**	**1**	**1**	**1**	**1**	**1**	**1**	**1**	**1**	**1**	**1**	**1**	**1**	**1**

Id	RW	Field	Value Id	Value	Description
A	RW	NRFHW			Reserved for Nordic hardware design

14.1.18 NRFHW[2]

Address offset: 0x058

Reserved for Nordic hardware design

Bit number	31	30	29	28	27	26	25	24	23	22	21	20	19	18	17	16	15	14	13	12	11	10	9	8	7	6	5	4	3	2	1	0
Id	A	A	A	A	A	A	A	A	A	A	A	A	A	A	A	A	A	A	A	A	A	A	A	A	A	A	A	A	A	A	A	A
Reset 0xFFFFFFFF	**1**	**1**	**1**	**1**	**1**	**1**	**1**	**1**	**1**	**1**	**1**	**1**	**1**	**1**	**1**	**1**	**1**	**1**	**1**	**1**	**1**	**1**	**1**	**1**	**1**	**1**	**1**	**1**	**1**	**1**	**1**	**1**

Id	RW	Field	Value Id	Value	Description
A	RW	NRFHW			Reserved for Nordic hardware design

14.1.19 NRFHW[3]

Address offset: 0x05C

Reserved for Nordic hardware design

Bit number	31	30	29	28	27	26	25	24	23	22	21	20	19	18	17	16	15	14	13	12	11	10	9	8	7	6	5	4	3	2	1	0
Id	A	A	A	A	A	A	A	A	A	A	A	A	A	A	A	A	A	A	A	A	A	A	A	A	A	A	A	A	A	A	A	A
Reset 0xFFFFFFFF	**1**	**1**	**1**	**1**	**1**	**1**	**1**	**1**	**1**	**1**	**1**	**1**	**1**	**1**	**1**	**1**	**1**	**1**	**1**	**1**	**1**	**1**	**1**	**1**	**1**	**1**	**1**	**1**	**1**	**1**	**1**	**1**

Id	RW	Field	Value Id	Value	Description
A	RW	NRFHW			Reserved for Nordic hardware design

14.1.20 NRFHW[4]

Address offset: 0x060

Reserved for Nordic hardware design

Bit number	31	30	29	28	27	26	25	24	23	22	21	20	19	18	17	16	15	14	13	12	11	10	9	8	7	6	5	4	3	2	1	0
Id	A	A	A	A	A	A	A	A	A	A	A	A	A	A	A	A	A	A	A	A	A	A	A	A	A	A	A	A	A	A	A	A
Reset 0xFFFFFFFF	**1**	**1**	**1**	**1**	**1**	**1**	**1**	**1**	**1**	**1**	**1**	**1**	**1**	**1**	**1**	**1**	**1**	**1**	**1**	**1**	**1**	**1**	**1**	**1**	**1**	**1**	**1**	**1**	**1**	**1**	**1**	**1**

Id	RW	Field	Value Id	Value	Description
A	RW	NRFHW			Reserved for Nordic hardware design

14.1.21 NRFHW[5]

Address offset: 0x064

Reserved for Nordic hardware design

Bit number	31	30	29	28	27	26	25	24	23	22	21	20	19	18	17	16	15	14	13	12	11	10	9	8	7	6	5	4	3	2	1	0
Id	A	A	A	A	A	A	A	A	A	A	A	A	A	A	A	A	A	A	A	A	A	A	A	A	A	A	A	A	A	A	A	A
Reset 0xFFFFFFFF	**1**	**1**	**1**	**1**	**1**	**1**	**1**	**1**	**1**	**1**	**1**	**1**	**1**	**1**	**1**	**1**	**1**	**1**	**1**	**1**	**1**	**1**	**1**	**1**	**1**	**1**	**1**	**1**	**1**	**1**	**1**	**1**

Id	RW	Field	Value Id	Value	Description
A	RW	NRFHW			Reserved for Nordic hardware design

14.1.22 NRFHW[6]

Address offset: 0x068

Reserved for Nordic hardware design

Bit number	31	30	29	28	27	26	25	24	23	22	21	20	19	18	17	16	15	14	13	12	11	10	9	8	7	6	5	4	3	2	1	0
Id	A	A	A	A	A	A	A	A	A	A	A	A	A	A	A	A	A	A	A	A	A	A	A	A	A	A	A	A	A	A	A	A
Reset 0xFFFFFFFF	**1**	**1**	**1**	**1**	**1**	**1**	**1**	**1**	**1**	**1**	**1**	**1**	**1**	**1**	**1**	**1**	**1**	**1**	**1**	**1**	**1**	**1**	**1**	**1**	**1**	**1**	**1**	**1**	**1**	**1**	**1**	**1**

Id	RW	Field	Value Id	Value	Description
A	RW	NRFHW			Reserved for Nordic hardware design

14.1.23 NRFHW[7]

Address offset: 0x06C

Reserved for Nordic hardware design

Bit number	31	30	29	28	27	26	25	24	23	22	21	20	19	18	17	16	15	14	13	12	11	10	9	8	7	6	5	4	3	2	1	0
Id	A	A	A	A	A	A	A	A	A	A	A	A	A	A	A	A	A	A	A	A	A	A	A	A	A	A	A	A	A	A	A	A
Reset 0xFFFFFFFF	**1**	**1**	**1**	**1**	**1**	**1**	**1**	**1**	**1**	**1**	**1**	**1**	**1**	**1**	**1**	**1**	**1**	**1**	**1**	**1**	**1**	**1**	**1**	**1**	**1**	**1**	**1**	**1**	**1**	**1**	**1**	**1**

Id	RW	Field	Value Id	Value	Description
A	RW	NRFHW			Reserved for Nordic hardware design

14.1.24 NRFHW[8]

Address offset: 0x070

Reserved for Nordic hardware design

Bit number	31	30	29	28	27	26	25	24	23	22	21	20	19	18	17	16	15	14	13	12	11	10	9	8	7	6	5	4	3	2	1	0
Id	A	A	A	A	A	A	A	A	A	A	A	A	A	A	A	A	A	A	A	A	A	A	A	A	A	A	A	A	A	A	A	A
Reset 0xFFFFFFFF	**1**	**1**	**1**	**1**	**1**	**1**	**1**	**1**	**1**	**1**	**1**	**1**	**1**	**1**	**1**	**1**	**1**	**1**	**1**	**1**	**1**	**1**	**1**	**1**	**1**	**1**	**1**	**1**	**1**	**1**	**1**	**1**

Id	RW	Field	Value Id	Value	Description
A	RW	NRFHW			Reserved for Nordic hardware design

14.1.25 NRFHW[9]

Address offset: 0x074

Reserved for Nordic hardware design

Bit number	31	30	29	28	27	26	25	24	23	22	21	20	19	18	17	16	15	14	13	12	11	10	9	8	7	6	5	4	3	2	1	0
Id	A	A	A	A	A	A	A	A	A	A	A	A	A	A	A	A	A	A	A	A	A	A	A	A	A	A	A	A	A	A	A	A
Reset 0xFFFFFFFF	**1**	**1**	**1**	**1**	**1**	**1**	**1**	**1**	**1**	**1**	**1**	**1**	**1**	**1**	**1**	**1**	**1**	**1**	**1**	**1**	**1**	**1**	**1**	**1**	**1**	**1**	**1**	**1**	**1**	**1**	**1**	**1**

Id	RW	Field	Value Id	Value	Description
A	RW	NRFHW			Reserved for Nordic hardware design

14.1.26 NRFHW[10]

Address offset: 0x078

Reserved for Nordic hardware design

Bit number	31	30	29	28	27	26	25	24	23	22	21	20	19	18	17	16	15	14	13	12	11	10	9	8	7	6	5	4	3	2	1	0
Id	A	A	A	A	A	A	A	A	A	A	A	A	A	A	A	A	A	A	A	A	A	A	A	A	A	A	A	A	A	A	A	A
Reset 0xFFFFFFFF	**1**	**1**	**1**	**1**	**1**	**1**	**1**	**1**	**1**	**1**	**1**	**1**	**1**	**1**	**1**	**1**	**1**	**1**	**1**	**1**	**1**	**1**	**1**	**1**	**1**	**1**	**1**	**1**	**1**	**1**	**1**	**1**

Id	RW	Field	Value Id	Value	Description
A	RW	NRFHW			Reserved for Nordic hardware design

14.1.27 NRFHW[11]

Address offset: 0x07C

Reserved for Nordic hardware design

Bit number	31	30	29	28	27	26	25	24	23	22	21	20	19	18	17	16	15	14	13	12	11	10	9	8	7	6	5	4	3	2	1	0
Id	A	A	A	A	A	A	A	A	A	A	A	A	A	A	A	A	A	A	A	A	A	A	A	A	A	A	A	A	A	A	A	A
Reset 0xFFFFFFFF	**1**	**1**	**1**	**1**	**1**	**1**	**1**	**1**	**1**	**1**	**1**	**1**	**1**	**1**	**1**	**1**	**1**	**1**	**1**	**1**	**1**	**1**	**1**	**1**	**1**	**1**	**1**	**1**	**1**	**1**	**1**	**1**

Id	RW	Field	Value Id	Value	Description
A	RW	NRFHW			Reserved for Nordic hardware design

14.1.28 CUSTOMER[0]

Address offset: 0x080

Reserved for customer

Bit number	31	30	29	28	27	26	25	24	23	22	21	20	19	18	17	16	15	14	13	12	11	10	9	8	7	6	5	4	3	2	1	0
Id	A	A	A	A	A	A	A	A	A	A	A	A	A	A	A	A	A	A	A	A	A	A	A	A	A	A	A	A	A	A	A	A
Reset 0xFFFFFFFF	**1**	**1**	**1**	**1**	**1**	**1**	**1**	**1**	**1**	**1**	**1**	**1**	**1**	**1**	**1**	**1**	**1**	**1**	**1**	**1**	**1**	**1**	**1**	**1**	**1**	**1**	**1**	**1**	**1**	**1**	**1**	**1**

Id	RW	Field	Value Id	Value	Description
A	RW	CUSTOMER			Reserved for customer

14.1.29 CUSTOMER[1]

Address offset: 0x084

Reserved for customer

Bit number	31	30	29	28	27	26	25	24	23	22	21	20	19	18	17	16	15	14	13	12	11	10	9	8	7	6	5	4	3	2	1	0
Id	A	A	A	A	A	A	A	A	A	A	A	A	A	A	A	A	A	A	A	A	A	A	A	A	A	A	A	A	A	A	A	A
Reset 0xFFFFFFFF	**1**	**1**	**1**	**1**	**1**	**1**	**1**	**1**	**1**	**1**	**1**	**1**	**1**	**1**	**1**	**1**	**1**	**1**	**1**	**1**	**1**	**1**	**1**	**1**	**1**	**1**	**1**	**1**	**1**	**1**	**1**	**1**

Id	RW	Field	Value Id	Value	Description
A	RW	CUSTOMER			Reserved for customer

14.1.30 CUSTOMER[2]

Address offset: 0x088

Reserved for customer

Bit number	31	30	29	28	27	26	25	24	23	22	21	20	19	18	17	16	15	14	13	12	11	10	9	8	7	6	5	4	3	2	1	0
Id	A	A	A	A	A	A	A	A	A	A	A	A	A	A	A	A	A	A	A	A	A	A	A	A	A	A	A	A	A	A	A	A
Reset 0xFFFFFFFF	**1**	**1**	**1**	**1**	**1**	**1**	**1**	**1**	**1**	**1**	**1**	**1**	**1**	**1**	**1**	**1**	**1**	**1**	**1**	**1**	**1**	**1**	**1**	**1**	**1**	**1**	**1**	**1**	**1**	**1**	**1**	**1**

Id	RW	Field	Value Id	Value	Description
A	RW	CUSTOMER			Reserved for customer

14.1.31 CUSTOMER[3]

Address offset: 0x08C

Reserved for customer

Bit number	31	30	29	28	27	26	25	24	23	22	21	20	19	18	17	16	15	14	13	12	11	10	9	8	7	6	5	4	3	2	1	0
Id	A	A	A	A	A	A	A	A	A	A	A	A	A	A	A	A	A	A	A	A	A	A	A	A	A	A	A	A	A	A	A	A
Reset 0xFFFFFFFF	**1**	**1**	**1**	**1**	**1**	**1**	**1**	**1**	**1**	**1**	**1**	**1**	**1**	**1**	**1**	**1**	**1**	**1**	**1**	**1**	**1**	**1**	**1**	**1**	**1**	**1**	**1**	**1**	**1**	**1**	**1**	**1**

Id	RW	Field	Value Id	Value	Description
A	RW	CUSTOMER			Reserved for customer

14.1.32 CUSTOMER[4]

Address offset: 0x090

Reserved for customer

Bit number	31	30	29	28	27	26	25	24	23	22	21	20	19	18	17	16	15	14	13	12	11	10	9	8	7	6	5	4	3	2	1	0
Id	A	A	A	A	A	A	A	A	A	A	A	A	A	A	A	A	A	A	A	A	A	A	A	A	A	A	A	A	A	A	A	A
Reset 0xFFFFFFFF	**1**	**1**	**1**	**1**	**1**	**1**	**1**	**1**	**1**	**1**	**1**	**1**	**1**	**1**	**1**	**1**	**1**	**1**	**1**	**1**	**1**	**1**	**1**	**1**	**1**	**1**	**1**	**1**	**1**	**1**	**1**	**1**

Id	RW	Field	Value Id	Value	Description
A	RW	CUSTOMER			Reserved for customer

14.1.33 CUSTOMER[5]

Address offset: 0x094

Reserved for customer

Bit number	31	30	29	28	27	26	25	24	23	22	21	20	19	18	17	16	15	14	13	12	11	10	9	8	7	6	5	4	3	2	1	0
Id	A	A	A	A	A	A	A	A	A	A	A	A	A	A	A	A	A	A	A	A	A	A	A	A	A	A	A	A	A	A	A	A
Reset 0xFFFFFFFF	**1**	**1**	**1**	**1**	**1**	**1**	**1**	**1**	**1**	**1**	**1**	**1**	**1**	**1**	**1**	**1**	**1**	**1**	**1**	**1**	**1**	**1**	**1**	**1**	**1**	**1**	**1**	**1**	**1**	**1**	**1**	**1**

Id	RW	Field	Value Id	Value	Description
A	RW	CUSTOMER			Reserved for customer

14.1.34 CUSTOMER[6]

Address offset: 0x098

Reserved for customer

Bit number	31	30	29	28	27	26	25	24	23	22	21	20	19	18	17	16	15	14	13	12	11	10	9	8	7	6	5	4	3	2	1	0
Id	A	A	A	A	A	A	A	A	A	A	A	A	A	A	A	A	A	A	A	A	A	A	A	A	A	A	A	A	A	A	A	A
Reset 0xFFFFFFFF	**1**	**1**	**1**	**1**	**1**	**1**	**1**	**1**	**1**	**1**	**1**	**1**	**1**	**1**	**1**	**1**	**1**	**1**	**1**	**1**	**1**	**1**	**1**	**1**	**1**	**1**	**1**	**1**	**1**	**1**	**1**	**1**

Id	RW	Field	Value Id	Value	Description
A	RW	CUSTOMER			Reserved for customer

14.1.35 CUSTOMER[7]

Address offset: 0x09C

Reserved for customer

Bit number	31	30	29	28	27	26	25	24	23	22	21	20	19	18	17	16	15	14	13	12	11	10	9	8	7	6	5	4	3	2	1	0
Id	A	A	A	A	A	A	A	A	A	A	A	A	A	A	A	A	A	A	A	A	A	A	A	A	A	A	A	A	A	A	A	A
Reset 0xFFFFFFFF	**1**	**1**	**1**	**1**	**1**	**1**	**1**	**1**	**1**	**1**	**1**	**1**	**1**	**1**	**1**	**1**	**1**	**1**	**1**	**1**	**1**	**1**	**1**	**1**	**1**	**1**	**1**	**1**	**1**	**1**	**1**	**1**

Id	RW	Field	Value Id	Value	Description
A	RW	CUSTOMER			Reserved for customer

14.1.36 CUSTOMER[8]

Address offset: 0x0A0

Reserved for customer

Bit number	31	30	29	28	27	26	25	24	23	22	21	20	19	18	17	16	15	14	13	12	11	10	9	8	7	6	5	4	3	2	1	0
Id	A	A	A	A	A	A	A	A	A	A	A	A	A	A	A	A	A	A	A	A	A	A	A	A	A	A	A	A	A	A	A	A
Reset 0xFFFFFFFF	**1**	**1**	**1**	**1**	**1**	**1**	**1**	**1**	**1**	**1**	**1**	**1**	**1**	**1**	**1**	**1**	**1**	**1**	**1**	**1**	**1**	**1**	**1**	**1**	**1**	**1**	**1**	**1**	**1**	**1**	**1**	**1**

Id	RW	Field	Value Id	Value	Description
A	RW	CUSTOMER			Reserved for customer

14.1.37 CUSTOMER[9]

Address offset: 0x0A4

Reserved for customer

Bit number	31	30	29	28	27	26	25	24	23	22	21	20	19	18	17	16	15	14	13	12	11	10	9	8	7	6	5	4	3	2	1	0
Id	A	A	A	A	A	A	A	A	A	A	A	A	A	A	A	A	A	A	A	A	A	A	A	A	A	A	A	A	A	A	A	A
Reset 0xFFFFFFFF	**1**	**1**	**1**	**1**	**1**	**1**	**1**	**1**	**1**	**1**	**1**	**1**	**1**	**1**	**1**	**1**	**1**	**1**	**1**	**1**	**1**	**1**	**1**	**1**	**1**	**1**	**1**	**1**	**1**	**1**	**1**	**1**

Id	RW	Field	Value Id	Value	Description
A	RW	CUSTOMER			Reserved for customer

14.1.38 CUSTOMER[10]

Address offset: 0x0A8

Reserved for customer

Bit number	31	30	29	28	27	26	25	24	23	22	21	20	19	18	17	16	15	14	13	12	11	10	9	8	7	6	5	4	3	2	1	0
Id	A	A	A	A	A	A	A	A	A	A	A	A	A	A	A	A	A	A	A	A	A	A	A	A	A	A	A	A	A	A	A	A
Reset 0xFFFFFFFF	**1**	**1**	**1**	**1**	**1**	**1**	**1**	**1**	**1**	**1**	**1**	**1**	**1**	**1**	**1**	**1**	**1**	**1**	**1**	**1**	**1**	**1**	**1**	**1**	**1**	**1**	**1**	**1**	**1**	**1**	**1**	**1**

Id	RW	Field	Value Id	Value	Description
A	RW	CUSTOMER			Reserved for customer

14.1.39 CUSTOMER[11]

Address offset: 0x0AC

Reserved for customer

Bit number	31	30	29	28	27	26	25	24	23	22	21	20	19	18	17	16	15	14	13	12	11	10	9	8	7	6	5	4	3	2	1	0
Id	A	A	A	A	A	A	A	A	A	A	A	A	A	A	A	A	A	A	A	A	A	A	A	A	A	A	A	A	A	A	A	A
Reset 0xFFFFFFFF	**1**	**1**	**1**	**1**	**1**	**1**	**1**	**1**	**1**	**1**	**1**	**1**	**1**	**1**	**1**	**1**	**1**	**1**	**1**	**1**	**1**	**1**	**1**	**1**	**1**	**1**	**1**	**1**	**1**	**1**	**1**	**1**

Id	RW	Field	Value Id	Value	Description
A	RW	CUSTOMER			Reserved for customer

14.1.40 CUSTOMER[12]

Address offset: 0x0B0

Reserved for customer

Bit number	31	30	29	28	27	26	25	24	23	22	21	20	19	18	17	16	15	14	13	12	11	10	9	8	7	6	5	4	3	2	1	0
Id	A	A	A	A	A	A	A	A	A	A	A	A	A	A	A	A	A	A	A	A	A	A	A	A	A	A	A	A	A	A	A	A
Reset 0xFFFFFFFF	**1**	**1**	**1**	**1**	**1**	**1**	**1**	**1**	**1**	**1**	**1**	**1**	**1**	**1**	**1**	**1**	**1**	**1**	**1**	**1**	**1**	**1**	**1**	**1**	**1**	**1**	**1**	**1**	**1**	**1**	**1**	**1**

Id	RW	Field	Value Id	Value	Description
A	RW	CUSTOMER			Reserved for customer

14.1.41 CUSTOMER[13]

Address offset: 0x0B4

Reserved for customer

Bit number	31	30	29	28	27	26	25	24	23	22	21	20	19	18	17	16	15	14	13	12	11	10	9	8	7	6	5	4	3	2	1	0
Id	A	A	A	A	A	A	A	A	A	A	A	A	A	A	A	A	A	A	A	A	A	A	A	A	A	A	A	A	A	A	A	A
Reset 0xFFFFFFFF	**1**	**1**	**1**	**1**	**1**	**1**	**1**	**1**	**1**	**1**	**1**	**1**	**1**	**1**	**1**	**1**	**1**	**1**	**1**	**1**	**1**	**1**	**1**	**1**	**1**	**1**	**1**	**1**	**1**	**1**	**1**	**1**

Id	RW	Field	Value Id	Value	Description
A	RW	CUSTOMER			Reserved for customer

14.1.42 CUSTOMER[14]

Address offset: 0x0B8

Reserved for customer

Bit number	31	30	29	28	27	26	25	24	23	22	21	20	19	18	17	16	15	14	13	12	11	10	9	8	7	6	5	4	3	2	1	0
Id	A	A	A	A	A	A	A	A	A	A	A	A	A	A	A	A	A	A	A	A	A	A	A	A	A	A	A	A	A	A	A	A
Reset 0xFFFFFFFF	**1**	**1**	**1**	**1**	**1**	**1**	**1**	**1**	**1**	**1**	**1**	**1**	**1**	**1**	**1**	**1**	**1**	**1**	**1**	**1**	**1**	**1**	**1**	**1**	**1**	**1**	**1**	**1**	**1**	**1**	**1**	**1**

Id	RW	Field	Value Id	Value	Description
A	RW	CUSTOMER			Reserved for customer

14.1.43 CUSTOMER[15]

Address offset: 0x0BC

Reserved for customer

Bit number	31	30	29	28	27	26	25	24	23	22	21	20	19	18	17	16	15	14	13	12	11	10	9	8	7	6	5	4	3	2	1	0
Id	A	A	A	A	A	A	A	A	A	A	A	A	A	A	A	A	A	A	A	A	A	A	A	A	A	A	A	A	A	A	A	A
Reset 0xFFFFFFFF	**1**	**1**	**1**	**1**	**1**	**1**	**1**	**1**	**1**	**1**	**1**	**1**	**1**	**1**	**1**	**1**	**1**	**1**	**1**	**1**	**1**	**1**	**1**	**1**	**1**	**1**	**1**	**1**	**1**	**1**	**1**	**1**

Id	RW	Field	Value Id	Value	Description
A	RW	CUSTOMER			Reserved for customer

14.1.44 CUSTOMER[16]

Address offset: 0x0C0

Reserved for customer

Bit number	31	30	29	28	27	26	25	24	23	22	21	20	19	18	17	16	15	14	13	12	11	10	9	8	7	6	5	4	3	2	1	0
Id	A	A	A	A	A	A	A	A	A	A	A	A	A	A	A	A	A	A	A	A	A	A	A	A	A	A	A	A	A	A	A	A
Reset 0xFFFFFFFF	**1**	**1**	**1**	**1**	**1**	**1**	**1**	**1**	**1**	**1**	**1**	**1**	**1**	**1**	**1**	**1**	**1**	**1**	**1**	**1**	**1**	**1**	**1**	**1**	**1**	**1**	**1**	**1**	**1**	**1**	**1**	**1**

Id	RW	Field	Value Id	Value	Description
A	RW	CUSTOMER			Reserved for customer

14.1.45 CUSTOMER[17]

Address offset: 0x0C4

Reserved for customer

Bit number	31	30	29	28	27	26	25	24	23	22	21	20	19	18	17	16	15	14	13	12	11	10	9	8	7	6	5	4	3	2	1	0
Id	A	A	A	A	A	A	A	A	A	A	A	A	A	A	A	A	A	A	A	A	A	A	A	A	A	A	A	A	A	A	A	A
Reset 0xFFFFFFFF	**1**	**1**	**1**	**1**	**1**	**1**	**1**	**1**	**1**	**1**	**1**	**1**	**1**	**1**	**1**	**1**	**1**	**1**	**1**	**1**	**1**	**1**	**1**	**1**	**1**	**1**	**1**	**1**	**1**	**1**	**1**	**1**

Id	RW	Field	Value Id	Value	Description
A	RW	CUSTOMER			Reserved for customer

14.1.46 CUSTOMER[18]

Address offset: 0x0C8

Reserved for customer

Bit number	31	30	29	28	27	26	25	24	23	22	21	20	19	18	17	16	15	14	13	12	11	10	9	8	7	6	5	4	3	2	1	0
Id	A	A	A	A	A	A	A	A	A	A	A	A	A	A	A	A	A	A	A	A	A	A	A	A	A	A	A	A	A	A	A	A
Reset 0xFFFFFFFF	**1**	**1**	**1**	**1**	**1**	**1**	**1**	**1**	**1**	**1**	**1**	**1**	**1**	**1**	**1**	**1**	**1**	**1**	**1**	**1**	**1**	**1**	**1**	**1**	**1**	**1**	**1**	**1**	**1**	**1**	**1**	**1**

Id	RW	Field	Value Id	Value	Description
A	RW	CUSTOMER			Reserved for customer

14.1.47 CUSTOMER[19]

Address offset: 0x0CC

Reserved for customer

Bit number	31	30	29	28	27	26	25	24	23	22	21	20	19	18	17	16	15	14	13	12	11	10	9	8	7	6	5	4	3	2	1	0
Id	A	A	A	A	A	A	A	A	A	A	A	A	A	A	A	A	A	A	A	A	A	A	A	A	A	A	A	A	A	A	A	A
Reset 0xFFFFFFFF	**1**	**1**	**1**	**1**	**1**	**1**	**1**	**1**	**1**	**1**	**1**	**1**	**1**	**1**	**1**	**1**	**1**	**1**	**1**	**1**	**1**	**1**	**1**	**1**	**1**	**1**	**1**	**1**	**1**	**1**	**1**	**1**

Id	RW	Field	Value Id	Value	Description
A	RW	CUSTOMER			Reserved for customer

14.1.48 CUSTOMER[20]

Address offset: 0x0D0

Reserved for customer

Bit number	31	30	29	28	27	26	25	24	23	22	21	20	19	18	17	16	15	14	13	12	11	10	9	8	7	6	5	4	3	2	1	0
Id	A	A	A	A	A	A	A	A	A	A	A	A	A	A	A	A	A	A	A	A	A	A	A	A	A	A	A	A	A	A	A	A
Reset 0xFFFFFFFF	**1**	**1**	**1**	**1**	**1**	**1**	**1**	**1**	**1**	**1**	**1**	**1**	**1**	**1**	**1**	**1**	**1**	**1**	**1**	**1**	**1**	**1**	**1**	**1**	**1**	**1**	**1**	**1**	**1**	**1**	**1**	**1**

Id	RW	Field	Value Id	Value	Description
A	RW	CUSTOMER			Reserved for customer

14.1.49 CUSTOMER[21]

Address offset: 0x0D4

Reserved for customer

Bit number	31	30	29	28	27	26	25	24	23	22	21	20	19	18	17	16	15	14	13	12	11	10	9	8	7	6	5	4	3	2	1	0
Id	A	A	A	A	A	A	A	A	A	A	A	A	A	A	A	A	A	A	A	A	A	A	A	A	A	A	A	A	A	A	A	A
Reset 0xFFFFFFFF	**1**	**1**	**1**	**1**	**1**	**1**	**1**	**1**	**1**	**1**	**1**	**1**	**1**	**1**	**1**	**1**	**1**	**1**	**1**	**1**	**1**	**1**	**1**	**1**	**1**	**1**	**1**	**1**	**1**	**1**	**1**	**1**

Id	RW	Field	Value Id	Value	Description
A	RW	CUSTOMER			Reserved for customer

14.1.50 CUSTOMER[22]

Address offset: 0x0D8

Reserved for customer

Bit number	31	30	29	28	27	26	25	24	23	22	21	20	19	18	17	16	15	14	13	12	11	10	9	8	7	6	5	4	3	2	1	0
Id	A	A	A	A	A	A	A	A	A	A	A	A	A	A	A	A	A	A	A	A	A	A	A	A	A	A	A	A	A	A	A	A
Reset 0xFFFFFFFF	**1**	**1**	**1**	**1**	**1**	**1**	**1**	**1**	**1**	**1**	**1**	**1**	**1**	**1**	**1**	**1**	**1**	**1**	**1**	**1**	**1**	**1**	**1**	**1**	**1**	**1**	**1**	**1**	**1**	**1**	**1**	**1**

Id	RW	Field	Value Id	Value	Description
A	RW	CUSTOMER			Reserved for customer

14.1.51 CUSTOMER[23]

Address offset: 0x0DC

Reserved for customer

Bit number	31	30	29	28	27	26	25	24	23	22	21	20	19	18	17	16	15	14	13	12	11	10	9	8	7	6	5	4	3	2	1	0
Id	A	A	A	A	A	A	A	A	A	A	A	A	A	A	A	A	A	A	A	A	A	A	A	A	A	A	A	A	A	A	A	A
Reset 0xFFFFFFFF	**1**	**1**	**1**	**1**	**1**	**1**	**1**	**1**	**1**	**1**	**1**	**1**	**1**	**1**	**1**	**1**	**1**	**1**	**1**	**1**	**1**	**1**	**1**	**1**	**1**	**1**	**1**	**1**	**1**	**1**	**1**	**1**

Id	RW	Field	Value Id	Value	Description
A	RW	CUSTOMER			Reserved for customer

14.1.52 CUSTOMER[24]

Address offset: 0x0E0

Reserved for customer

Bit number	31	30	29	28	27	26	25	24	23	22	21	20	19	18	17	16	15	14	13	12	11	10	9	8	7	6	5	4	3	2	1	0
Id	A	A	A	A	A	A	A	A	A	A	A	A	A	A	A	A	A	A	A	A	A	A	A	A	A	A	A	A	A	A	A	A
Reset 0xFFFFFFFF	**1**	**1**	**1**	**1**	**1**	**1**	**1**	**1**	**1**	**1**	**1**	**1**	**1**	**1**	**1**	**1**	**1**	**1**	**1**	**1**	**1**	**1**	**1**	**1**	**1**	**1**	**1**	**1**	**1**	**1**	**1**	**1**

Id	RW	Field	Value Id	Value	Description
A	RW	CUSTOMER			Reserved for customer

14.1.53 CUSTOMER[25]

Address offset: 0x0E4

Reserved for customer

Bit number	31	30	29	28	27	26	25	24	23	22	21	20	19	18	17	16	15	14	13	12	11	10	9	8	7	6	5	4	3	2	1	0
Id	A	A	A	A	A	A	A	A	A	A	A	A	A	A	A	A	A	A	A	A	A	A	A	A	A	A	A	A	A	A	A	A
Reset 0xFFFFFFFF	**1**	**1**	**1**	**1**	**1**	**1**	**1**	**1**	**1**	**1**	**1**	**1**	**1**	**1**	**1**	**1**	**1**	**1**	**1**	**1**	**1**	**1**	**1**	**1**	**1**	**1**	**1**	**1**	**1**	**1**	**1**	**1**

Id	RW	Field	Value Id	Value	Description
A	RW	CUSTOMER			Reserved for customer

14.1.54 CUSTOMER[26]

Address offset: 0x0E8

Reserved for customer

Bit number	31	30	29	28	27	26	25	24	23	22	21	20	19	18	17	16	15	14	13	12	11	10	9	8	7	6	5	4	3	2	1	0
Id	A	A	A	A	A	A	A	A	A	A	A	A	A	A	A	A	A	A	A	A	A	A	A	A	A	A	A	A	A	A	A	A
Reset 0xFFFFFFFF	**1**	**1**	**1**	**1**	**1**	**1**	**1**	**1**	**1**	**1**	**1**	**1**	**1**	**1**	**1**	**1**	**1**	**1**	**1**	**1**	**1**	**1**	**1**	**1**	**1**	**1**	**1**	**1**	**1**	**1**	**1**	**1**

Id	RW	Field	Value Id	Value	Description
A	RW	CUSTOMER			Reserved for customer

14.1.55 CUSTOMER[27]

Address offset: 0x0EC

Reserved for customer

Bit number	31	30	29	28	27	26	25	24	23	22	21	20	19	18	17	16	15	14	13	12	11	10	9	8	7	6	5	4	3	2	1	0
Id	A	A	A	A	A	A	A	A	A	A	A	A	A	A	A	A	A	A	A	A	A	A	A	A	A	A	A	A	A	A	A	A
Reset 0xFFFFFFFF	**1**	**1**	**1**	**1**	**1**	**1**	**1**	**1**	**1**	**1**	**1**	**1**	**1**	**1**	**1**	**1**	**1**	**1**	**1**	**1**	**1**	**1**	**1**	**1**	**1**	**1**	**1**	**1**	**1**	**1**	**1**	**1**

Id	RW	Field	Value Id	Value	Description
A	RW	CUSTOMER			Reserved for customer

14.1.56 CUSTOMER[28]

Address offset: 0x0F0

Reserved for customer

Bit number	31	30	29	28	27	26	25	24	23	22	21	20	19	18	17	16	15	14	13	12	11	10	9	8	7	6	5	4	3	2	1	0
Id	A	A	A	A	A	A	A	A	A	A	A	A	A	A	A	A	A	A	A	A	A	A	A	A	A	A	A	A	A	A	A	A
Reset 0xFFFFFFFF	**1**	**1**	**1**	**1**	**1**	**1**	**1**	**1**	**1**	**1**	**1**	**1**	**1**	**1**	**1**	**1**	**1**	**1**	**1**	**1**	**1**	**1**	**1**	**1**	**1**	**1**	**1**	**1**	**1**	**1**	**1**	**1**

Id	RW	Field	Value Id	Value	Description
A	RW	CUSTOMER			Reserved for customer

14.1.57 CUSTOMER[29]

Address offset: 0x0F4

Reserved for customer

Bit number	31	30	29	28	27	26	25	24	23	22	21	20	19	18	17	16	15	14	13	12	11	10	9	8	7	6	5	4	3	2	1	0
Id	A	A	A	A	A	A	A	A	A	A	A	A	A	A	A	A	A	A	A	A	A	A	A	A	A	A	A	A	A	A	A	A
Reset 0xFFFFFFFF	**1**	**1**	**1**	**1**	**1**	**1**	**1**	**1**	**1**	**1**	**1**	**1**	**1**	**1**	**1**	**1**	**1**	**1**	**1**	**1**	**1**	**1**	**1**	**1**	**1**	**1**	**1**	**1**	**1**	**1**	**1**	**1**

Id	RW	Field	Value Id	Value	Description
A	RW	CUSTOMER			Reserved for customer

14.1.58 CUSTOMER[30]

Address offset: 0x0F8

Reserved for customer

Bit number				31	30	29	28	27	26	25	24	23	22	21	20	19	18	17	16	15	14	13	12	11	10	9	8	7	6	5	4	3	2	1	0
Id				A	A	A	A	A	A	A	A	A	A	A	A	A	A	A	A	A	A	A	A	A	A	A	A	A	A	A	A	A	A	A	A
Reset 0xFFFFFFFF				**1**	**1**	**1**	**1**	**1**	**1**	**1**	**1**	**1**	**1**	**1**	**1**	**1**	**1**	**1**	**1**	**1**	**1**	**1**	**1**	**1**	**1**	**1**	**1**	**1**	**1**	**1**	**1**	**1**	**1**	**1**	**1**
Id	**RW**	**Field**	**Value Id**	**Value**								**Description**																							
A	RW	CUSTOMER										Reserved for customer																							

14.1.59 CUSTOMER[31]

Address offset: 0x0FC

Reserved for customer

Bit number				31	30	29	28	27	26	25	24	23	22	21	20	19	18	17	16	15	14	13	12	11	10	9	8	7	6	5	4	3	2	1	0
Id				A	A	A	A	A	A	A	A	A	A	A	A	A	A	A	A	A	A	A	A	A	A	A	A	A	A	A	A	A	A	A	A
Reset 0xFFFFFFFF				**1**	**1**	**1**	**1**	**1**	**1**	**1**	**1**	**1**	**1**	**1**	**1**	**1**	**1**	**1**	**1**	**1**	**1**	**1**	**1**	**1**	**1**	**1**	**1**	**1**	**1**	**1**	**1**	**1**	**1**	**1**	**1**
Id	**RW**	**Field**	**Value Id**	**Value**								**Description**																							
A	RW	CUSTOMER										Reserved for customer																							

14.1.60 PSELRESET[0]

Address offset: 0x200

Mapping of the nRESET function (see POWER chapter for details)

All PSELRESET registers have to contain the same value for a pin mapping to be valid. If they don't, there will be no nRESET function exposed on a GPIO, and the device will always start independently of the levels present on any of the GPIOs.

Bit number				31	30	29	28	27	26	25	24	23	22	21	20	19	18	17	16	15	14	13	12	11	10	9	8	7	6	5	4	3	2	1	0
Id				B																											A	A	A	A	A
Reset 0xFFFFFFFF				**1**	**1**	**1**	**1**	**1**	**1**	**1**	**1**	**1**	**1**	**1**	**1**	**1**	**1**	**1**	**1**	**1**	**1**	**1**	**1**	**1**	**1**	**1**	**1**	**1**	**1**	**1**	**1**	**1**	**1**	**1**	**1**
Id	**RW**	**Field**	**Value Id**	**Value**								**Description**																							
A	RW	PIN		21								GPIO number P0.n onto which Reset is exposed																							
B	RW	CONNECT										Connection																							
			Disconnected	1								Disconnect																							
			Connected	0								Connect																							

14.1.61 PSELRESET[1]

Address offset: 0x204

Mapping of the nRESET function (see POWER chapter for details)

All PSELRESET registers have to contain the same value for a pin mapping to be valid. If they don't, there will be no nRESET function exposed on a GPIO, and the device will always start independently of the levels present on any of the GPIOs.

Bit number				31	30	29	28	27	26	25	24	23	22	21	20	19	18	17	16	15	14	13	12	11	10	9	8	7	6	5	4	3	2	1	0
Id				B																											A	A	A	A	A
Reset 0xFFFFFFFF				**1**	**1**	**1**	**1**	**1**	**1**	**1**	**1**	**1**	**1**	**1**	**1**	**1**	**1**	**1**	**1**	**1**	**1**	**1**	**1**	**1**	**1**	**1**	**1**	**1**	**1**	**1**	**1**	**1**	**1**	**1**	**1**
Id	**RW**	**Field**	**Value Id**	**Value**								**Description**																							
A	RW	PIN		21								GPIO number P0.n onto which Reset is exposed																							
B	RW	CONNECT										Connection																							
			Disconnected	1								Disconnect																							
			Connected	0								Connect																							

14.1.62 APPROTECT

Address offset: 0x208

Access Port protection

Bit number				31	30	29	28	27	26	25	24	23	22	21	20	19	18	17	16	15	14	13	12	11	10	9	8	7	6	5	4	3	2	1	0
Id																												A	A	A	A	A	A	A	A
Reset 0xFFFFFFFF				**1**	**1**	**1**	**1**	**1**	**1**	**1**	**1**	**1**	**1**	**1**	**1**	**1**	**1**	**1**	**1**	**1**	**1**	**1**	**1**	**1**	**1**	**1**	**1**	**1**	**1**	**1**	**1**	**1**	**1**	**1**	**1**
Id	**RW**	**Field**	**Value Id**	**Value**								**Description**																							
A	RW	PALL										Enable or disable Access Port protection.																							
												See *Debug and trace* on page 70 for more information.																							
			Disabled	0xFF								Disable																							
			Enabled	0x00								Enable																							

14.1.63 NFCPINS

Address offset: 0x20C

Setting of pins dedicated to NFC functionality: NFC antenna or GPIO

Bit number				31	30	29	28	27	26	25	24	23	22	21	20	19	18	17	16	15	14	13	12	11	10	9	8	7	6	5	4	3	2	1	0
Id																																			A
Reset 0xFFFFFFFF				**1**	**1**	**1**	**1**	**1**	**1**	**1**	**1**	**1**	**1**	**1**	**1**	**1**	**1**	**1**	**1**	**1**	**1**	**1**	**1**	**1**	**1**	**1**	**1**	**1**	**1**	**1**	**1**	**1**	**1**	**1**	**1**
Id	**RW**	**Field**	**Value Id**	**Value**								**Description**																							
A	RW	PROTECT										Setting of pins dedicated to NFC functionality																							
			Disabled	0								Operation as GPIO pins. Same protection as normal GPIO pins																							
			NFC	1								Operation as NFC antenna pins. Configures the protection for NFC operation																							

15 Peripheral interface

Peripherals are controlled by the CPU by writing to configuration registers and task registers. Peripheral events are indicated to the CPU by event registers and interrupts if they are configured for a given event.

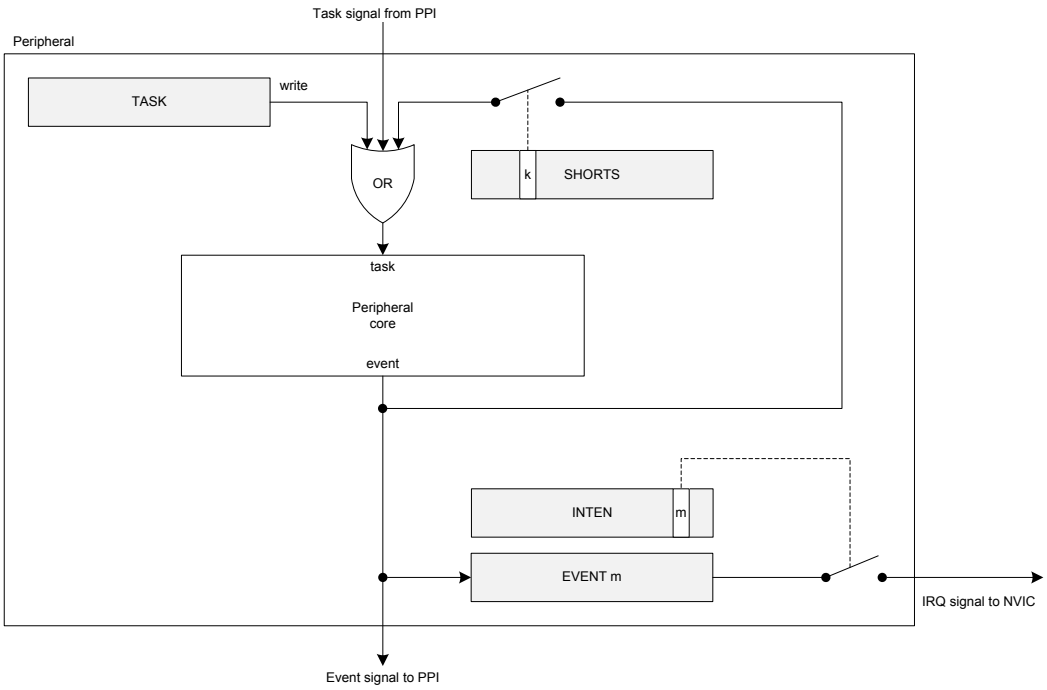

Figure 9: Tasks, events, shortcuts, and interrupts

15.1 Peripheral ID

Every peripheral is assigned a fixed block of 0x1000 bytes of address space, which is equal to 1024 x 32 bit registers.

See *Instantiation* on page 21 for more information about which peripherals are available and where they are located in the address map.

There is a direct relationship between the peripheral ID and base address. For example, a peripheral with base address 0x40000000 is assigned ID=0, a peripheral with base address 0x40001000 is assigned ID=1, and a peripheral with base address 0x4001F000 is assigned ID=31.

Peripherals may share the same ID, which may impose one or more of the following limitations:

- Some peripherals share some registers or other common resources.
- Operation is mutually exclusive. Only one of the peripherals can be used at a time.
- Switching from one peripheral to another must follow a specific pattern (disable the first, then enable the second peripheral).

15.2 Peripherals with shared ID

In general, and with the exception of ID 0, peripherals sharing an ID and base address may not be used simultaneously. The user can only enable one at the time on this specific ID.

When switching between two peripherals that share an ID, the user should do the following to prevent unwanted behavior:

- Disable the previously used peripheral
- Remove any PPI connections set up for the peripheral that is being disabled
- Clear all bits in the INTEN register, i.e. INTENCLR = 0xFFFFFFFF.
- Explicitly configure the peripheral that you enable and do not rely on configuration values that may be inherited from the peripheral that was disabled.
- Enable the now configured peripheral.

For each of the rows in the following table, the instance ID listed is shared by the peripherals in the same row.

Table 16: Peripherals sharing an ID

Instance						
ID 2 (0x40002000)	UARTE	UART				
-						
ID 3 (0x40003000)	SPIM	SPIS	SPI	TWIM	TWIS	TWI
ID 4 (0x40004000)	SPIM	SPIS	SPI	TWIM	TWIS	TWI
ID 35 (0x40023000)	SPIM	SPIS	SPI			
-						
ID 15 (0x4000F000)	AAR	CCM				
-						
ID 19 (0x40013000)	COMP	LPCOMP				
-						
ID 20 (0x40014000)	SWI	EGU				
ID 21 (0x40015000)	SWI	EGU				
ID 22 (0x40016000)	SWI	EGU				
ID 23 (0x40017000)	SWI	EGU				
ID 24 (0x40018000)	SWI	EGU				
ID 25 (0x40019000)	SWI	EGU				

15.3 Peripheral registers

Most peripherals feature an ENABLE register. Unless otherwise specified in the relevant chapter, the peripheral registers (in particular the PSEL registers) must be configured before enabling the peripheral.

Note that the peripheral must be enabled before tasks and events can be used.

15.4 Bit set and clear

Registers with multiple single-bit bit fields may implement the "set-and-clear" pattern. This pattern enables firmware to set and clear individual bits in a register without having to perform a read-modify-write operation on the main register.

This pattern is implemented using three consecutive addresses in the register map where the main register is followed by a dedicated SET and CLR register in that order.

The SET register is used to set individual bits in the main register while the CLR register is used to clear individual bits in the main register. Writing a '1' to a bit in the SET or CLR register will set or clear the same bit in the main register respectively. Writing a '0' to a bit in the SET or CLR register has no effect. Reading the SET or CLR registers returns the value of the main register.

Restriction: The main register may not be visible and hence not directly accessible in all cases.

15.5 Tasks

Tasks are used to trigger actions in a peripheral, for example, to start a particular behavior. A peripheral can implement multiple tasks with each task having a separate register in that peripheral's task register group.

A task is triggered when firmware writes a '1' to the task register or when the peripheral itself or another peripheral toggles the corresponding task signal. See *Figure 9: Tasks, events, shortcuts, and interrupts* on page 66.

15.6 Events

Events are used to notify peripherals and the CPU about events that have happened, for example, a state change in a peripheral. A peripheral may generate multiple events with each event having a separate register in that peripheral's event register group.

An event is generated when the peripheral itself toggles the corresponding event signal, and the event register is updated to reflect that the event has been generated. See *Figure 9: Tasks, events, shortcuts, and interrupts* on page 66. An event register is only cleared when firmware writes a '0' to it.

Events can be generated by the peripheral even when the event register is set to '1'.

15.7 Shortcuts

A shortcut is a direct connection between an event and a task within the same peripheral. If a shortcut is enabled, its associated task is automatically triggered when its associated event is generated.

Using a shortcut is the equivalent to making the same connection outside the peripheral and through the PPI. However, the propagation delay through the shortcut is usually shorter than the propagation delay through the PPI.

Shortcuts are predefined, which means their connections cannot be configured by firmware. Each shortcut can be individually enabled or disabled through the shortcut register, one bit per shortcut, giving a maximum of 32 shortcuts for each peripheral.

15.8 Interrupts

All peripherals support interrupts. Interrupts are generated by events.

A peripheral only occupies one interrupt, and the interrupt number follows the peripheral ID. For example, the peripheral with ID=4 is connected to interrupt number 4 in the Nested Vectored Interrupt Controller (NVIC).

Using the INTEN, INTENSET and INTENCLR registers, every event generated by a peripheral can be configured to generate that peripheral's interrupt. Multiple events can be enabled to generate interrupts simultaneously. To resolve the correct interrupt source, the event registers in the event group of peripheral registers will indicate the source.

Some peripherals implement only INTENSET and INTENCLR, and the INTEN register is not available on those peripherals. Refer to the individual chapters for details. In all cases, however, reading back the INTENSET or INTENCLR register returns the same information as in INTEN.

Each event implemented in the peripheral is associated with a specific bit position in the INTEN, INTENSET and INTENCLR registers.

The relationship between tasks, events, shortcuts, and interrupts is shown in *Figure 9: Tasks, events, shortcuts, and interrupts* on page 66.

15.8.1 Interrupt clearing

When clearing an interrupt by writing "0" to an event register, or disabling an interrupt using the INTENCLR register, it can take up to four CPU clock cycles to take effect. This means that an interrupt may reoccur immediatelly even if a new event has not come, if the program exits an interrupt handler after the interrupt is cleared or disabled, but before four clock cycles have passed.

> **Important:** To avoid an interrupt reoccurring before a new event has come, the program should perform a read from one of the peripheral registers, for example, the event register that has been cleared, or the INTENCLR register that has been used to disable the interrupt.

This will cause a one to three-cycle delay and ensure the interrupt is cleared before exiting the interrupt handler. Care should be taken to ensure the compiler does not remove the read operation as an optimization. If the program can guarantee a four-cycle delay after event clear or interrupt disable another way, then a read of a register is not required.

16 Debug and trace

The debug and trace system offers a flexible and powerful mechanism for non-intrusive debugging.

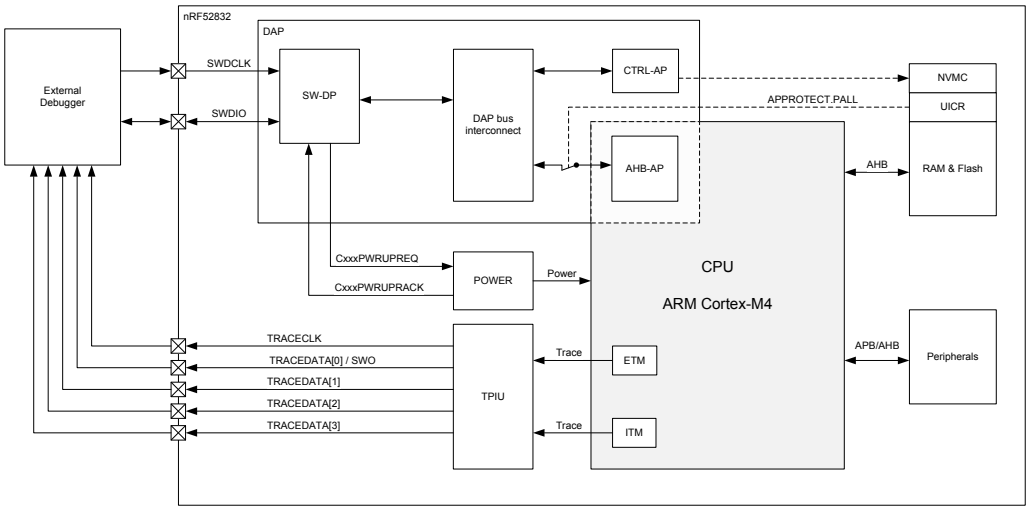

Figure 10: Debug and trace overview

The main features of the debug and trace system are:

- Two-pin Serial Wire Debug (SWD) interface
- Flash Patch and Breakpoint Unit (FPB) supports:
  - Two literal comparators
  - Six instruction comparators
- Data Watchpoint and Trace Unit (DWT)
  - Four comparators
- Instrumentation Trace Macrocell (ITM)
- Embedded Trace Macrocell (ETM)
- Trace Port Interface Unit (TPIU)
  - 4-bit parallel trace of ITM and ETM trace data
  - Serial Wire Output (SWO) trace of ITM data

16.1 DAP - Debug Access Port

An external debugger can access the device via the DAP.

The SW-DP implements the Serial Wire Debug protocol (SWD) that is a two-pin serial interface, see SWDCLK and SWDIO in *Figure 10: Debug and trace overview* on page 70.

In addition to the default access port in the CPU (AHB-AP), the DAP includes a custom Control Access Port (CTRL-AP). The CTRL-AP is described in more detail in *CTRL-AP - Control Access Port* on page 71.

Important:

- The SWDIO line has an internal pull-up resistor.
- The SWDCLK line has an internal pull-down resistor.

16.2 CTRL-AP - Control Access Port

The Control Access Port (CTRL-AP) is a custom access port that enables control of the device even if the other access ports in the DAP are being disabled by the access port protection.

Access port protection blocks the debugger from read and write access to all CPU registers and memory-mapped addresses. See the UICR register *APPROTECT* on page 64 for more information about enabling access port protection.

This access port enables the following features:

- Soft reset, see *Reset* on page 80 for more information
- Disable access port protection

Access port protection can only be disabled by issuing an ERASEALL command via CTRL-AP. This command will erase the Flash, UICR, and RAM.

16.2.1 Registers

Table 17: Register Overview

Register	Offset	Description
RESET	0x000	Soft reset triggered through CTRL-AP
ERASEALL	0x004	Erase all
ERASEALLSTATUS	0x008	Status register for the ERASEALL operation
APPROTECTSTATUS	0x00C	Status register for access port protection
IDR	0x0FC	CTRL-AP Identification Register, IDR

RESET

Address offset: 0x000

Soft reset triggered through CTRL-AP

Bit number				31	30	29	28	27	26	25	24	23	22	21	20	19	18	17	16	15	14	13	12	11	10	9	8	7	6	5	4	3	2	1	0
Id																																			A
Reset 0x00000000				**0**	**0**	**0**	**0**	**0**	**0**	**0**	**0**	**0**	**0**	**0**	**0**	**0**	**0**	**0**	**0**	**0**	**0**	**0**	**0**	**0**	**0**	**0**	**0**	**0**	**0**	**0**	**0**	**0**	**0**	**0**	**0**
Id	**RW**	**Field**	**Value Id**	**Value**																															
A	RW	RESET																																	
			NoReset	0																															
			Reset	1																															

Soft reset triggered through CTRL-AP. See Reset Behaviour in POWER chapter for more details.

Reset is not active

Reset is active. Device is held in reset

ERASEALL

Address offset: 0x004

Erase all

Bit number				31	30	29	28	27	26	25	24	23	22	21	20	19	18	17	16	15	14	13	12	11	10	9	8	7	6	5	4	3	2	1	0
Id																																			A
Reset 0x00000000				**0**	**0**	**0**	**0**	**0**	**0**	**0**	**0**	**0**	**0**	**0**	**0**	**0**	**0**	**0**	**0**	**0**	**0**	**0**	**0**	**0**	**0**	**0**	**0**	**0**	**0**	**0**	**0**	**0**	**0**	**0**	**0**
Id	**RW**	**Field**	**Value Id**	**Value**																															
A	W	ERASEALL																																	
			NoOperation	0																															
			Erase	1																															

Erase all FLASH and RAM

No operation

Erase all FLASH and RAM

ERASEALLSTATUS

Address offset: 0x008

Status register for the ERASEALL operation

Bit number				31	30	29	28	27	26	25	24	23	22	21	20	19	18	17	16	15	14	13	12	11	10	9	8	7	6	5	4	3	2	1	0
Id																																			A
Reset 0x00000000				**0**	**0**	**0**	**0**	**0**	**0**	**0**	**0**	**0**	**0**	**0**	**0**	**0**	**0**	**0**	**0**	**0**	**0**	**0**	**0**	**0**	**0**	**0**	**0**	**0**	**0**	**0**	**0**	**0**	**0**	**0**	**0**
Id	**RW**	**Field**	**Value Id**	**Value**																															**Description**
A	R	ERASEALLSTATUS																																	Status register for the ERASEALL operation
			Ready	0																															ERASEALL is ready
			Busy	1																															ERASEALL is busy (on-going)

APPROTECTSTATUS

Address offset: 0x00C

Status register for access port protection

Bit number				31	30	29	28	27	26	25	24	23	22	21	20	19	18	17	16	15	14	13	12	11	10	9	8	7	6	5	4	3	2	1	0
Id																																			A
Reset 0x00000000				**0**	**0**	**0**	**0**	**0**	**0**	**0**	**0**	**0**	**0**	**0**	**0**	**0**	**0**	**0**	**0**	**0**	**0**	**0**	**0**	**0**	**0**	**0**	**0**	**0**	**0**	**0**	**0**	**0**	**0**	**0**	**0**
Id	**RW**	**Field**	**Value Id**	**Value**																															**Description**
A	R	APPROTECTSTATUS																																	Status register for access port protection
			Enabled	0																															Access port protection enabled
			Disabled	1																															Access port protection not enabled

IDR

Address offset: 0x0FC

CTRL-AP Identification Register, IDR

Bit number				31	30	29	28	27	26	25	24	23	22	21	20	19	18	17	16	15	14	13	12	11	10	9	8	7	6	5	4	3	2	1	0
Id				E	E	E	E	D	D	D	D	C	C	C	C	C	C	C	B	B	B	B						A	A	A	A	A	A	A	A
Reset 0x02880000				**0**	**0**	**0**	**0**	**0**	**0**	**1**	**0**	**1**	**0**	**0**	**0**	**1**	**0**	**0**	**0**	**0**	**0**	**0**	**0**	**0**	**0**	**0**	**0**	**0**	**0**	**0**	**0**	**0**	**0**	**0**	**0**
Id	**RW**	**Field**	**Value Id**	**Value**																															**Description**
A	R	APID																																	AP Identification
B	R	CLASS																																	Access Port (AP) class
			NotDefined	0x0																															No defined class
			MEMAP	0x8																															Memory Access Port
C	R	JEP106ID																																	JEDEC JEP106 identity code
D	R	JEP106CONT																																	JEDEC JEP106 continuation code
E	R	REVISION																																	Revision

16.3 Debug interface mode

Before the external debugger can access the CPU's access port (AHB-AP) or the Control Access Port (CTRL-AP), the debugger must first request the device to power up via CxxxPWRUPREQ in the SWJ-DP.

As long as the debugger is requesting power via CxxxPWRUPREQ, the device will be in debug interface mode. If the debugger is not requesting power via CxxxPWRUPREQ, the device will be in normal mode.

Some peripherals will behave differently in debug interface mode compared to normal mode. These differences are described in more detail in the chapters of the peripherals that are affected.

When a debug session is over, the external debugger must make sure to put the device back into normal mode since the overall power consumption will be higher in debug interface mode compared to normal mode.

For details on how to use the debug capabilities please read the debug documentation of your IDE.

If the device is in System OFF when power is requested via CxxxPWRUPREQ, the system will wake up and the DIF flag in *RESETREAS* on page 83 will be set.

16.4 Real-time debug

The nRF52832 supports real-time debugging.

Real-time debugging will allow interrupts to execute to completion in real time when breakpoints are set in Thread mode or lower priority interrupts. This enables the developer to set a breakpoint and single-step through their code without a failure of the real-time event-driven threads running at higher priority. For example, this enables the device to continue to service the high-priority interrupts of an external controller or sensor without failure or loss of state synchronization while the developer steps through code in a low-priority thread.

16.5 Trace

The device supports ETM and ITM trace.

Trace data from the ETM and the ITM is sent to an external debugger via a 4-bit wide parallel trace port (TPIU), see TRACEDATA[0] through TRACEDATA[3] and TRACECLK in *Figure 10: Debug and trace overview* on page 70.

In addition to parallel trace, the TPIU supports serial trace via the Serial Wire Output (SWO) trace protocol.

Parallel and serial trace cannot be used at the same time.

ETM trace is only supported in parallel trace mode while ITM trace is supported in both parallel and serial trace modes.

For details on how to use the trace capabilities, please read the debug documentation of your IDE.

TPIU's trace pins are multiplexed with GPIOs, and SWO and TRACEDATA[0] use the same GPIO, see *Pin assignments* on page 13 for more information.

Trace speed is configured in the *TRACECONFIG* on page 105 register.

The speed of the trace pins depends on the DRIVE setting of the GPIOs that the trace pins are multiplexed with, see *PIN_CNF[14]* on page 139, *PIN_CNF[15]* on page 139, *PIN_CNF[16]* on page 140, *PIN_CNF[18]* on page 141 and *PIN_CNF[20]* on page 143. Only S0S1 and H0H1 drives are suitable for debugging. S0S1 is the default DRIVE at reset. If parallel or serial trace port signals are not fast enough in the debugging conditions, all GPIOs in use for tracing should be set to high drive (H0H1). The user shall make sure that these GPIOs' DRIVE is not overwritten by software during the debugging session.

16.5.1 Electrical Specification

Trace port

Symbol	Description	Min.	Typ.	Max.	Units
T_{cyc}	Clock period, as defined by ARM (See ARM Infocenter, Embedded Trace Macrocell Architecture Specification, Trace Port Physical Interface, Timing specifications)	62.5		500	ns

17 Power and clock management

Power and clock management in nRF52832 is optimized for ultra-low power applications.

The core of the power and clock management system is the Power Management Unit (PMU) illustrated in *Figure 11: Power Management Unit* on page 74.

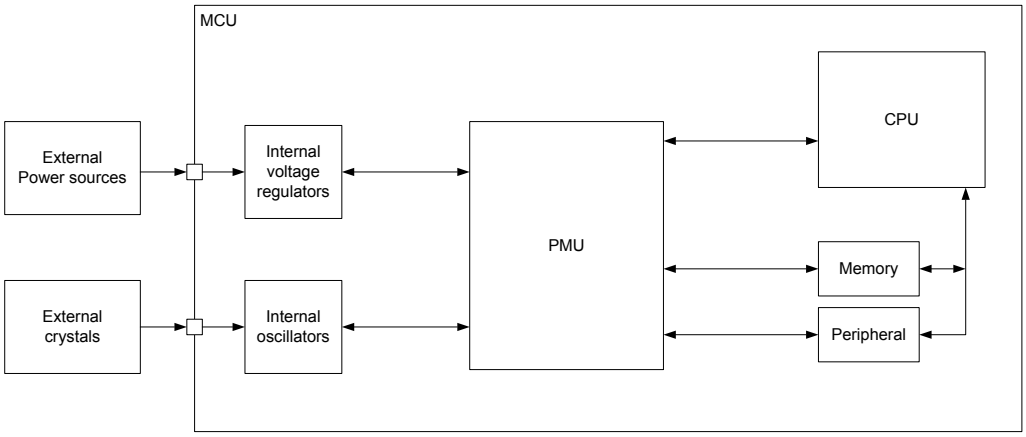

Figure 11: Power Management Unit

The user application is not required to actively control power and clock, since the PMU is able to automatically detect which resources are required by the different components in the system at any given time. The PMU will continuously optimize the system based on this information to achieve the lowest power consumption possible without user interaction.

17.1 Current consumption scenarios

As the system is being constantly tuned by the PMU, estimating the energy consumption of an application can be challenging if the designer is not able to do measurements on the hardware directly. See *Electrical Specification* on page 74 for application scenarios showing average current drawn from the VDD supply.

Each scenario specifies a set of active operations and conditions applying to the given scenario. *Table 18: Current consumption scenarios, common conditions* on page 74 shows the conditions used for a scenario unless otherwise is stated in the scenario description.

Table 18: Current consumption scenarios, common conditions

Condition	Value
VDD	3 V
Temperature	25°C
CPU	WFI/WFE sleep
Peripherals	All idle
Clock	Not running
Regulator	DCDC

17.1.1 Electrical Specification

Current consumption: Radio

Symbol	Description	Min.	Typ.	Max.	Units
I_{RADIO_TX0}	0 dBm TX @ 1 Mb/s Bluetooth Low Energy mode, Clock = HFXO		7.1		mA
I_{RADIO_TX1}	-40 dBm TX @ 1 Mb/s Bluetooth Low Energy mode, Clock = HFXO		4.1		mA
I_{RADIO_RX0}	Radio RX @ 1 Mb/s Bluetooth Low Energy mode, Clock = HFXO		6.5		mA

Current consumption: Radio protocol configurations

Symbol	Description	Min.	Typ.	Max.	Units
I_{S0}	CPU running CoreMark from Flash, Radio 0 dBm TX @ 1 Mb/s Bluetooth Low Energy mode, Clock = HFXO, Cache enabled		9.6		mA
I_{S1}	CPU running CoreMark from Flash, Radio RX @ 1 Mb/s Bluetooth Low Energy mode, Clock = HFXO, Cache enabled		9.0		mA

Current consumption: Ultra-low power

Symbol	Description	Min.	Typ.	Max.	Units
$I_{ON\_RAMOFF\_EVENT}$	System ON, No RAM retention, Wake on any event		1.2		µA
$I_{ON\_RAMON\_EVENT}$	System ON, Full RAM retention, Wake on any event		1.5		µA
$I_{ON\_RAMOFF\_RTC}$	System ON, No RAM retention, Wake on RTC		1.9		µA
$I_{OFF\_RAMOFF\_RESET}$	System OFF, No RAM retention, Wake on reset		0.7		µA
$I_{OFF\_RAMOFF\_GPIO}$	System OFF, No RAM retention, Wake on GPIO		1.2		µA
$I_{OFF\_RAMOFF\_LPCOMP}$	System OFF, No RAM retention, Wake on LPCOMP		1.9		µA
$I_{OFF\_RAMOFF\_NFC}$	System OFF, No RAM retention, Wake on NFC field		0.7		µA
$I_{OFF\_RAMON\_RESET}$	System OFF, Full RAM retention, Wake on reset		1.0		µA

18 POWER — Power supply

This device has the following power supply features:

- On-chip LDO and DC/DC regulators
- Global System ON/OFF modes
- Individual RAM section power control for all system modes
- Analog or digital pin wakeup from System OFF
- Supervisor HW to manage power on reset, brownout, and power fail
- Auto-controlled refresh modes for LDO and DC/DC regulators to maximize efficiency
- Automatic switching between LDO and DC/DC regulator based on load to maximize efficiency

Note: Two additional external passive components are required to use the DC/DC regulator.

18.1 Regulators

The following internal power regulator alternatives are supported:

- Internal LDO regulator
- Internal DC/DC regulator

The LDO is the default regulator.

The DC/DC regulator can be used as an alternative to the LDO regulator and is enabled through the *DCDCEN* on page 86 register. Using the DC/DC regulator will reduce current consumption compared to when using the LDO regulator, but the DC/DC regulator requires an external LC filter to be connected, as shown in *Figure 13: DC/DC regulator setup* on page 77.

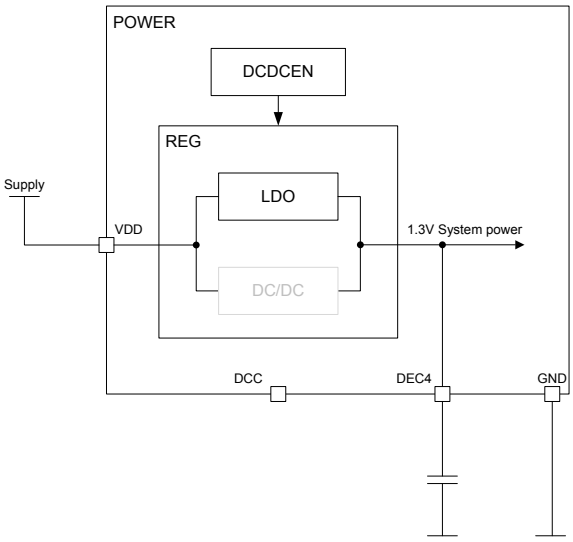

Figure 12: LDO regulator setup

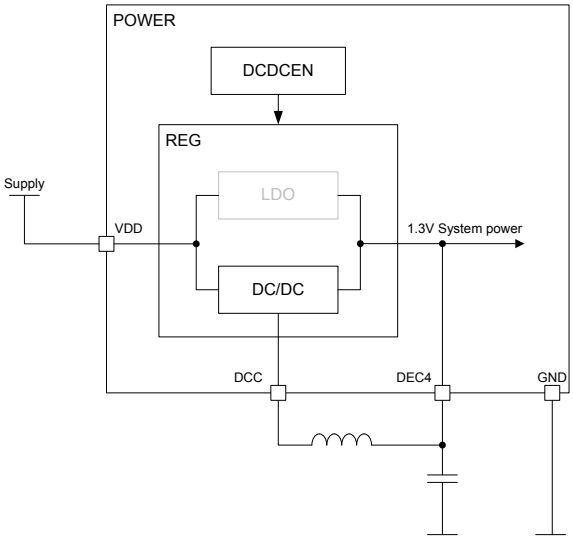

Figure 13: DC/DC regulator setup

18.2 System OFF mode

System OFF is the deepest power saving mode the system can enter. In this mode, the system's core functionality is powered down and all ongoing tasks are terminated.

The device can be put into System OFF mode using the POWER register interface. When in System OFF mode, the device can be woken up through one of the following signals:

1. The DETECT signal, optionally generated by the GPIO peripheral
2. The ANADETECT signal, optionally generated by the LPCOMP module
3. The SENSE signal, optionally generated by the NFC module to "wake-on-field"
4. A reset

When the system wakes up from System OFF mode, it gets reset. For more details, see *Reset behavior* on page 81.

One or more RAM sections can be retained in System OFF mode depending on the settings in the RAM[n].POWER registers.

RAM[n].POWER are retained registers, see *Reset behavior*. Note that these registers are usually overwritten by the startup code provided with the nRF application examples.

Before entering System OFF mode, the user must make sure that all on-going EasyDMA transactions have been completed. This is usually accomplished by making sure that the EasyDMA enabled peripheral is not active when entering System OFF.

18.2.1 Emulated System OFF mode

If the device is in debug interface mode, System OFF will be emulated to secure that all required resources needed for debugging are available during System OFF.

See *Debug and trace* on page 70 for more information. Required resources needed for debugging include the following key components: *Debug and trace* on page 70, *CLOCK — Clock control* on page 98, *POWER — Power supply* on page 76, *NVMC — Non-volatile memory controller* on page 26, CPU, Flash, and RAM. Since the CPU is kept on in an emulated System OFF mode, it is recommended to add an infinite loop directly after entering System OFF, to prevent the CPU from executing code that normally should not be executed.

18.3 System ON mode

System ON is the default state after power-on reset. In System ON, all functional blocks such as the CPU or peripherals, can be in IDLE or RUN mode, depending on the configuration set by the software and the state of the application executing.

Register *RESETREAS* on page 83 provides information about the source that caused the wakeup or reset.

The system can switch on and off the appropriate internal power sources, depending on how much power is needed at any given time. The power requirement of a peripheral is directly related to its activity level, and the activity level of a peripheral is usually raised and lowered when specific tasks are triggered or events are generated.

18.3.1 Sub power modes

In System ON mode, when both the CPU and all the peripherals are in IDLE mode, the system can reside in one of the two sub power modes.

The sub power modes are:

- Constant latency
- Low power

In constant latency mode the CPU wakeup latency and the PPI task response will be constant and kept at a minimum. This is secured by forcing a set of base resources on while in sleep. The advantage of having a constant and predictable latency will be at the cost of having increased power consumption. The constant latency mode is selected by triggering the CONSTLAT task.

In low power mode the automatic power management system, described in *System ON mode* on page 78, ensures the most efficient supply option is chosen to save the most power. The advantage of having the lowest power possible will be at the cost of having varying CPU wakeup latency and PPI task response. The low power mode is selected by triggering the LOWPWR task.

When the system enters System ON mode, it will, by default, reside in the low power sub-power mode.

18.4 Power supply supervisor

The power supply supervisor initializes the system at power-on and provides an early warning of impending power failure.

In addition, the power supply supervisor puts the system in a reset state if the supply voltage is too low for safe operation (brownout). The power supply supervisor is illustrated in *Figure 14: Power supply supervisor* on page 79.

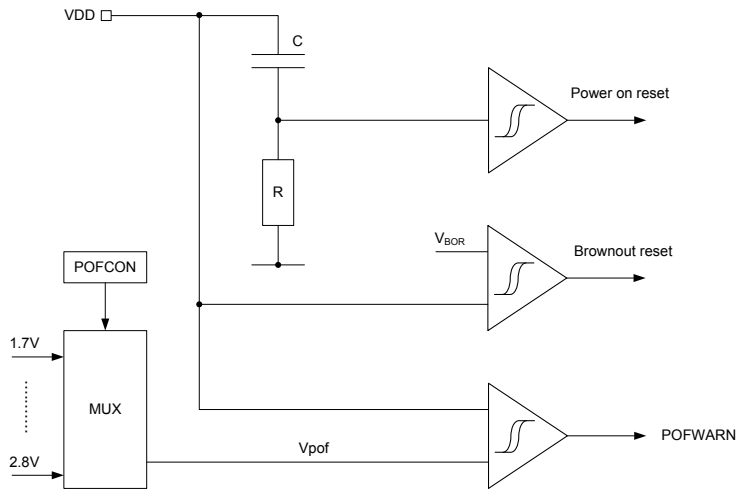

Figure 14: Power supply supervisor

18.4.1 Power-fail comparator

The power-fail comparator (POF) can provide the CPU with an early warning of impending power failure. It will not reset the system, but give the CPU time to prepare for an orderly power-down.

The comparator features a hysteresis of V_{HYST}, as illustrated in *Figure 15: Power-fail comparator (BOR = Brownout reset)* on page 79. The threshold V_{POF} is set in register *POFCON* on page 84. If the POF is enabled and the supply voltage falls below V_{POF}, the POFWARN event will be generated. This event will also be generated if the supply voltage is already below V_{POF} at the time the POF is enabled, or if V_{POF} is re-configured to a level above the supply voltage.

If power-fail warning is enabled and the supply voltage is below V_{POF} the power-fail comparator will prevent the NVMC from performing write operations to the NVM. See *NVMC — Non-volatile memory controller* on page 26 for more information about the NVMC.

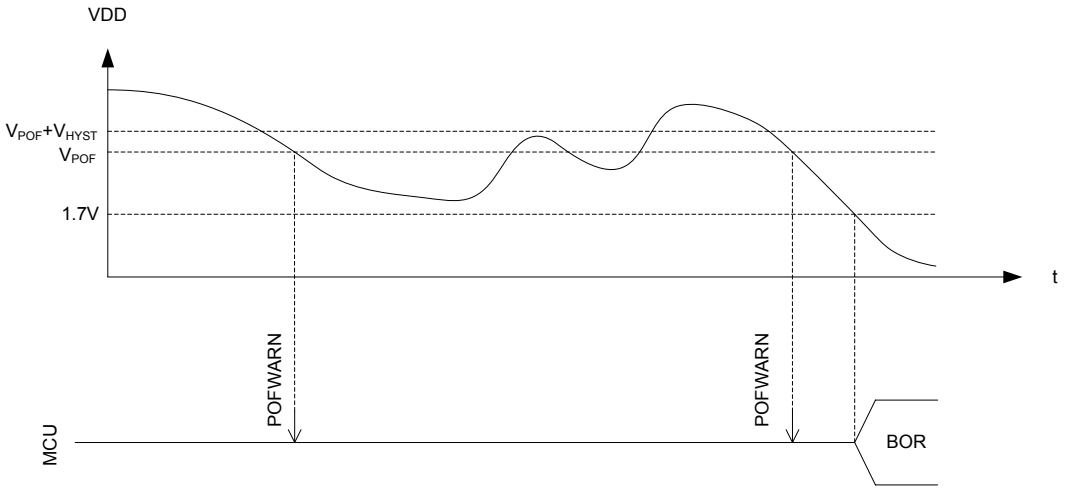

Figure 15: Power-fail comparator (BOR = Brownout reset)

To save power, the power-fail comparator is not active in System OFF or in System ON when HFCLK is not running.

18.5 RAM sections

RAM section power control is used for retention in System OFF mode and for powering down unused sections in System ON mode.

Each RAM section can power up and down independently in both System ON and System OFF mode. See chapter *Memory* for more information on RAM sections.

18.6 Reset

There are multiple sources that may trigger a reset.

After a reset has occurred, register *RESETREAS* can be read to determine which source generated the reset.

18.6.1 Power-on reset

The power-on reset generator initializes the system at power-on.

The system is held in reset state until the supply has reached the minimum operating voltage and the internal voltage regulators have started.

A step increase in supply voltage of 300 mV or more, with rise time of 300 ms or less, within the valid supply range, may result in a system reset.

18.6.2 Pin reset

A pin reset is generated when the physical reset pin on the device is asserted.

Pin reset is configured via the *PSELRESET[0]* and *PSELRESET[1]* registers.

18.6.3 Wakeup from System OFF mode reset

The device is reset when it wakes up from System OFF mode.

The DAP is not reset following a wake up from System OFF mode if the device is in debug interface mode. Refer to chapter *Debug and trace* on page 70 for more information.

18.6.4 Soft reset

A soft reset is generated when the SYSRESETREQ bit of the Application Interrupt and Reset Control Register (AIRCR register) in the ARM® core is set.

Refer to *ARM documentation* for more details.

A soft reset can also be generated via the *RESET* on page 71 register in the CTRL-AP.

18.6.5 Watchdog reset

A Watchdog reset is generated when the watchdog times out.

Refer to chapter *WDT — Watchdog timer* on page 405 for more information.

18.6.6 Brown-out reset

The brown-out reset generator puts the system in reset state if the supply voltage drops below the brownout reset (BOR) threshold.

Refer to section *Power fail comparator* on page 97 for more information.

18.7 Retained registers

A retained register is a register that will retain its value in System OFF mode and through a reset, depending on reset source. See individual peripheral chapters for information of which registers are retained for the various peripherals.

18.8 Reset behavior

Reset source	Reset target CPU	Peripherals	GPIO	Debug[a]	SWJ-DP	RAM	WDT	Retained registers	RESETREAS
CPU lockup [4]	x	x	x						
Soft reset	x	x	x						
Wakeup from System OFF mode reset	x	x		x [5]		x [6]			
Watchdog reset [7]	x	x	x	x		x	x	x	
Pin reset	x	x	x	x		x	x	x	
Brownout reset	x	x	x	x	x	x	x	x	x
Power on reset	x	x	x	x	x	x	x	x	x

Note: The RAM is never reset, but depending on reset source, RAM content may be corrupted.

18.9 Registers

Table 19: Instances

Base address	Peripheral	Instance	Description	Configuration
0x40000000	POWER	POWER	Power Control	

Table 20: Register Overview

Register	Offset	Description	
TASKS_CONSTLAT	0x078	Enable constant latency mode	
TASKS_LOWPWR	0x07C	Enable low power mode (variable latency)	
EVENTS_POFWARN	0x108	Power failure warning	
EVENTS_SLEEPENTER	0x114	CPU entered WFI/WFE sleep	
EVENTS_SLEEPEXIT	0x118	CPU exited WFI/WFE sleep	
INTENSET	0x304	Enable interrupt	
INTENCLR	0x308	Disable interrupt	
RESETREAS	0x400	Reset reason	
RAMSTATUS	0x428	RAM status register	Deprecated
SYSTEMOFF	0x500	System OFF register	
POFCON	0x510	Power failure comparator configuration	
GPREGRET	0x51C	General purpose retention register	
GPREGRET2	0x520	General purpose retention register	
RAMON	0x524	RAM on/off register (this register is retained)	Deprecated
RAMONB	0x554	RAM on/off register (this register is retained)	Deprecated
DCDCEN	0x578	DC/DC enable register	
RAM[0].POWER	0x900	RAM0 power control register	
RAM[0].POWERSET	0x904	RAM0 power control set register	
RAM[0].POWERCLR	0x908	RAM0 power control clear register	
RAM[1].POWER	0x910	RAM1 power control register	
RAM[1].POWERSET	0x914	RAM1 power control set register	
RAM[1].POWERCLR	0x918	RAM1 power control clear register	
RAM[2].POWER	0x920	RAM2 power control register	

[a] All debug components excluding SWJ-DP. See *Debug and trace* on page 70 chapter for more information about the different debug components in the system.

[4] Reset from CPU lockup is disabled if the device is in debug interface mode. CPU lockup is not possible in System OFF.

[5] The Debug components will not be reset if the device is in debug interface mode.

[6] RAM is not reset on wakeup from OFF mode, but depending on settings in the RAM registers parts, or the whole RAM, may not be retained after the device has entered System OFF mode.

[7] Watchdog reset is not available in System OFF.

Register	Offset	Description
RAM[2].POWERSET	0x924	RAM2 power control set register
RAM[2].POWERCLR	0x928	RAM2 power control clear register
RAM[3].POWER	0x930	RAM3 power control register
RAM[3].POWERSET	0x934	RAM3 power control set register
RAM[3].POWERCLR	0x938	RAM3 power control clear register
RAM[4].POWER	0x940	RAM4 power control register
RAM[4].POWERSET	0x944	RAM4 power control set register
RAM[4].POWERCLR	0x948	RAM4 power control clear register
RAM[5].POWER	0x950	RAM5 power control register
RAM[5].POWERSET	0x954	RAM5 power control set register
RAM[5].POWERCLR	0x958	RAM5 power control clear register
RAM[6].POWER	0x960	RAM6 power control register
RAM[6].POWERSET	0x964	RAM6 power control set register
RAM[6].POWERCLR	0x968	RAM6 power control clear register
RAM[7].POWER	0x970	RAM7 power control register
RAM[7].POWERSET	0x974	RAM7 power control set register
RAM[7].POWERCLR	0x978	RAM7 power control clear register

18.9.1 INTENSET

Address offset: 0x304

Enable interrupt

Bit number	31	30	29	28	27	26	25	24	23	22	21	20	19	18	17	16	15	14	13	12	11	10	9	8	7	6	5	4	3	2	1	0
Id																										C	B			A		
Reset 0x00000000	**0**	**0**	**0**	**0**	**0**	**0**	**0**	**0**	**0**	**0**	**0**	**0**	**0**	**0**	**0**	**0**	**0**	**0**	**0**	**0**	**0**	**0**	**0**	**0**	**0**	**0**	**0**	**0**	**0**	**0**	**0**	**0**

Id	RW	Field	Value Id	Value	Description
A	RW	POFWARN			Write '1' to Enable interrupt for POFWARN event See EVENTS_POFWARN
			Set	1	Enable
			Disabled	0	Read: Disabled
			Enabled	1	Read: Enabled
B	RW	SLEEPENTER			Write '1' to Enable interrupt for SLEEPENTER event See EVENTS_SLEEPENTER
			Set	1	Enable
			Disabled	0	Read: Disabled
			Enabled	1	Read: Enabled
C	RW	SLEEPEXIT			Write '1' to Enable interrupt for SLEEPEXIT event See EVENTS_SLEEPEXIT
			Set	1	Enable
			Disabled	0	Read: Disabled
			Enabled	1	Read: Enabled

18.9.2 INTENCLR

Address offset: 0x308

Disable interrupt

Bit number	31	30	29	28	27	26	25	24	23	22	21	20	19	18	17	16	15	14	13	12	11	10	9	8	7	6	5	4	3	2	1	0
Id																										C	B			A		
Reset 0x00000000	**0**	**0**	**0**	**0**	**0**	**0**	**0**	**0**	**0**	**0**	**0**	**0**	**0**	**0**	**0**	**0**	**0**	**0**	**0**	**0**	**0**	**0**	**0**	**0**	**0**	**0**	**0**	**0**	**0**	**0**	**0**	**0**

Id	RW	Field	Value Id	Value	Description
A	RW	POFWARN			Write '1' to Disable interrupt for POFWARN event See EVENTS_POFWARN
			Clear	1	Disable
			Disabled	0	Read: Disabled
			Enabled	1	Read: Enabled

Bit number				31	30	29	28	27	26	25	24	23	22	21	20	19	18	17	16	15	14	13	12	11	10	9	8	7	6	5	4	3	2	1	0
Id																													C	B			A		
Reset 0x00000000				**0**	**0**	**0**	**0**	**0**	**0**	**0**	**0**	**0**	**0**	**0**	**0**	**0**	**0**	**0**	**0**	**0**	**0**	**0**	**0**	**0**	**0**	**0**	**0**	**0**	**0**	**0**	**0**	**0**	**0**	**0**	**0**
Id	**RW**	**Field**	**Value Id**	**Value**								**Description**																							
B	RW	SLEEPENTER										Write '1' to Disable interrupt for SLEEPENTER event See *EVENTS_SLEEPENTER*																							
			Clear	1								Disable																							
			Disabled	0								Read: Disabled																							
			Enabled	1								Read: Enabled																							
C	RW	SLEEPEXIT										Write '1' to Disable interrupt for SLEEPEXIT event See *EVENTS_SLEEPEXIT*																							
			Clear	1								Disable																							
			Disabled	0								Read: Disabled																							
			Enabled	1								Read: Enabled																							

18.9.3 RESETREAS

Address offset: 0x400

Reset reason

Unless cleared, the RESETREAS register will be cumulative. A field is cleared by writing '1' to it. If none of the reset sources are flagged, this indicates that the chip was reset from the on-chip reset generator, which will indicate a power-on-reset or a brownout reset.

Bit number				31	30	29	28	27	26	25	24	23	22	21	20	19	18	17	16	15	14	13	12	11	10	9	8	7	6	5	4	3	2	1	0
Id																H	G	F	E													D	C	B	A
Reset 0x00000000				**0**	**0**	**0**	**0**	**0**	**0**	**0**	**0**	**0**	**0**	**0**	**0**	**0**	**0**	**0**	**0**	**0**	**0**	**0**	**0**	**0**	**0**	**0**	**0**	**0**	**0**	**0**	**0**	**0**	**0**	**0**	**0**
Id	**RW**	**Field**	**Value Id**	**Value**								**Description**																							
A	RW	RESETPIN										Reset from pin-reset detected																							
			NotDetected	0								Not detected																							
			Detected	1								Detected																							
B	RW	DOG										Reset from watchdog detected																							
			NotDetected	0								Not detected																							
			Detected	1								Detected																							
C	RW	SREQ										Reset from soft reset detected																							
			NotDetected	0								Not detected																							
			Detected	1								Detected																							
D	RW	LOCKUP										Reset from CPU lock-up detected																							
			NotDetected	0								Not detected																							
			Detected	1								Detected																							
E	RW	OFF										Reset due to wake up from System OFF mode when wakeup is triggered from DETECT signal from GPIO																							
			NotDetected	0								Not detected																							
			Detected	1								Detected																							
F	RW	LPCOMP										Reset due to wake up from System OFF mode when wakeup is triggered from ANADETECT signal from LPCOMP																							
			NotDetected	0								Not detected																							
			Detected	1								Detected																							
G	RW	DIF										Reset due to wake up from System OFF mode when wakeup is triggered from entering into debug interface mode																							
			NotDetected	0								Not detected																							
			Detected	1								Detected																							
H	RW	NFC										Reset due to wake up from System OFF mode by NFC field detect																							
			NotDetected	0								Not detected																							
			Detected	1								Detected																							

18.9.4 RAMSTATUS (Deprecated)

Address offset: 0x428

RAM status register

Since this register is deprecated the following substitutions have been made: RAM block 0 is equivalent to a block comprising RAM0.S0 and RAM1.S0, RAM block 1 is equivalent to a block comprising RAM2.S0 and RAM3.S0, RAM block 2 is equivalent to a block comprising RAM4.S0 and RAM5.S0 and RAM block 3 is equivalent to a block comprising RAM6.S0 and RAM7.S0. A RAM block field will indicate ON as long as any of the RAM sections associated with a block are on.

Bit number				31	30	29	28	27	26	25	24	23	22	21	20	19	18	17	16	15	14	13	12	11	10	9	8	7	6	5	4	3	2	1	0
Id																																D	C	B	A
Reset 0x00000000				**0**	**0**	**0**	**0**	**0**	**0**	**0**	**0**	**0**	**0**	**0**	**0**	**0**	**0**	**0**	**0**	**0**	**0**	**0**	**0**	**0**	**0**	**0**	**0**	**0**	**0**	**0**	**0**	**0**	**0**	**0**	**0**
Id	**RW**	**Field**	**Value Id**	**Value**																															
A	R	RAMBLOCK0																																	
			Off	0																															
			On	1																															
B	R	RAMBLOCK1																																	
			Off	0																															
			On	1																															
C	R	RAMBLOCK2																																	
			Off	0																															
			On	1																															
D	R	RAMBLOCK3																																	
			Off	0																															
			On	1																															

18.9.5 SYSTEMOFF

Address offset: 0x500

System OFF register

Bit number				31	30	29	28	27	26	25	24	23	22	21	20	19	18	17	16	15	14	13	12	11	10	9	8	7	6	5	4	3	2	1	0
Id																																			A
Reset 0x00000000				**0**	**0**	**0**	**0**	**0**	**0**	**0**	**0**	**0**	**0**	**0**	**0**	**0**	**0**	**0**	**0**	**0**	**0**	**0**	**0**	**0**	**0**	**0**	**0**	**0**	**0**	**0**	**0**	**0**	**0**	**0**	**0**
Id	**RW**	**Field**	**Value Id**	**Value**																															
A	W	SYSTEMOFF																																	
			Enter	1																															

18.9.6 POFCON

Address offset: 0x510

Power failure comparator configuration

Bit number				31	30	29	28	27	26	25	24	23	22	21	20	19	18	17	16	15	14	13	12	11	10	9	8	7	6	5	4	3	2	1	0
Id																															B	B	B	B	A
Reset 0x00000000				**0**	**0**	**0**	**0**	**0**	**0**	**0**	**0**	**0**	**0**	**0**	**0**	**0**	**0**	**0**	**0**	**0**	**0**	**0**	**0**	**0**	**0**	**0**	**0**	**0**	**0**	**0**	**0**	**0**	**0**	**0**	**0**
Id	**RW**	**Field**	**Value Id**	**Value**																															
A	RW	POF																																	
			Disabled	0																															
			Enabled	1																															
B	RW	THRESHOLD																																	
			V17	4																															
			V18	5																															
			V19	6																															
			V20	7																															
			V21	8																															
			V22	9																															
			V23	10																															

Bit number				31	30	29	28	27	26	25	24	23	22	21	20	19	18	17	16	15	14	13	12	11	10	9	8	7	6	5	4	3	2	1	0
Id																															B	B	B	B	A
Reset 0x00000000				**0**	**0**	**0**	**0**	**0**	**0**	**0**	**0**	**0**	**0**	**0**	**0**	**0**	**0**	**0**	**0**	**0**	**0**	**0**	**0**	**0**	**0**	**0**	**0**	**0**	**0**	**0**	**0**	**0**	**0**	**0**	**0**
Id	**RW**	**Field**	**Value Id**	**Value**																										**Description**					
			V24	11																										Set threshold to 2.4 V					
			V25	12																										Set threshold to 2.5 V					
			V26	13																										Set threshold to 2.6 V					
			V27	14																										Set threshold to 2.7 V					
			V28	15																										Set threshold to 2.8 V					

18.9.7 GPREGRET

Address offset: 0x51C

General purpose retention register

Bit number				31	30	29	28	27	26	25	24	23	22	21	20	19	18	17	16	15	14	13	12	11	10	9	8	7	6	5	4	3	2	1	0
Id																												A	A	A	A	A	A	A	A
Reset 0x00000000				**0**	**0**	**0**	**0**	**0**	**0**	**0**	**0**	**0**	**0**	**0**	**0**	**0**	**0**	**0**	**0**	**0**	**0**	**0**	**0**	**0**	**0**	**0**	**0**	**0**	**0**	**0**	**0**	**0**	**0**	**0**	**0**
Id	**RW**	**Field**	**Value Id**	**Value**																										**Description**					
A	RW	GPREGRET																												General purpose retention register This register is a retained register					

18.9.8 GPREGRET2

Address offset: 0x520

General purpose retention register

Bit number				31	30	29	28	27	26	25	24	23	22	21	20	19	18	17	16	15	14	13	12	11	10	9	8	7	6	5	4	3	2	1	0
Id																												A	A	A	A	A	A	A	A
Reset 0x00000000				**0**	**0**	**0**	**0**	**0**	**0**	**0**	**0**	**0**	**0**	**0**	**0**	**0**	**0**	**0**	**0**	**0**	**0**	**0**	**0**	**0**	**0**	**0**	**0**	**0**	**0**	**0**	**0**	**0**	**0**	**0**	**0**
Id	**RW**	**Field**	**Value Id**	**Value**																										**Description**					
A	RW	GPREGRET																												General purpose retention register This register is a retained register					

18.9.9 RAMON (Deprecated)

Address offset: 0x524

RAM on/off register (this register is retained)

Since this register is deprecated the following substitutions have been made: RAM block 0 is equivalent to a block comprising RAM0.S0 and RAM0.S1 and RAM block 1 is equivalent to a block comprising RAM1.S0 and RAM1.S1. For new designs it is recommended to use the POWER.RAM-0.POWER and its sibling registers instead.

Bit number				31	30	29	28	27	26	25	24	23	22	21	20	19	18	17	16	15	14	13	12	11	10	9	8	7	6	5	4	3	2	1	0
Id																		D	C															B	A
Reset 0x00000003				**0**	**0**	**0**	**0**	**0**	**0**	**0**	**0**	**0**	**0**	**0**	**0**	**0**	**0**	**0**	**0**	**0**	**0**	**0**	**0**	**0**	**0**	**0**	**0**	**0**	**0**	**0**	**0**	**0**	**0**	**1**	**1**
Id	**RW**	**Field**	**Value Id**	**Value**																										**Description**					
A	RW	ONRAM0																												Keep RAM block 0 on or off in system ON Mode					
			RAM0Off	0																										Off					
			RAM0On	1																										On					
B	RW	ONRAM1																												Keep RAM block 1 on or off in system ON Mode					
			RAM1Off	0																										Off					
			RAM1On	1																										On					
C	RW	OFFRAM0																												Keep retention on RAM block 0 when RAM block is switched off					
			RAM0Off	0																										Off					
			RAM0On	1																										On					
D	RW	OFFRAM1																												Keep retention on RAM block 1 when RAM block is switched off					
			RAM1Off	0																										Off					

Bit number				31	30	29	28	27	26	25	24	23	22	21	20	19	18	17	16	15	14	13	12	11	10	9	8	7	6	5	4	3	2	1	0
Id																		D	C															B	A
Reset 0x00000003				**0**	**0**	**0**	**0**	**0**	**0**	**0**	**0**	**0**	**0**	**0**	**0**	**0**	**0**	**0**	**0**	**0**	**0**	**0**	**0**	**0**	**0**	**0**	**0**	**0**	**0**	**0**	**0**	**0**	**0**	**1**	**1**
Id	**RW**	**Field**	**Value Id**	**Value**								**Description**																							
			RAM1On	1								On																							

18.9.10 RAMONB (Deprecated)

Address offset: 0x554

RAM on/off register (this register is retained)

Since this register is deprecated the following substitutions have been made: RAM block 2 is equivalent to a block comprising RAM2.S0 and RAM2.S1 and RAM block 3 is equivalent to a block comprising RAM3.S0 and RAM3.S1. For new designs it is recommended to use the POWER.RAM-0.POWER and its sibling registers instead.

Bit number				31	30	29	28	27	26	25	24	23	22	21	20	19	18	17	16	15	14	13	12	11	10	9	8	7	6	5	4	3	2	1	0
Id																		D	C															B	A
Reset 0x00000003				**0**	**0**	**0**	**0**	**0**	**0**	**0**	**0**	**0**	**0**	**0**	**0**	**0**	**0**	**0**	**0**	**0**	**0**	**0**	**0**	**0**	**0**	**0**	**0**	**0**	**0**	**0**	**0**	**0**	**0**	**1**	**1**
Id	**RW**	**Field**	**Value Id**	**Value**								**Description**																							
A	RW	ONRAM2										Keep RAM block 2 on or off in system ON Mode																							
			RAM2Off	0								Off																							
			RAM2On	1								On																							
B	RW	ONRAM3										Keep RAM block 3 on or off in system ON Mode																							
			RAM3Off	0								Off																							
			RAM3On	1								On																							
C	RW	OFFRAM2										Keep retention on RAM block 2 when RAM block is switched off																							
			RAM2Off	0								Off																							
			RAM2On	1								On																							
D	RW	OFFRAM3										Keep retention on RAM block 3 when RAM block is switched off																							
			RAM3Off	0								Off																							
			RAM3On	1								On																							

18.9.11 DCDCEN

Address offset: 0x578

DC/DC enable register

Bit number				31	30	29	28	27	26	25	24	23	22	21	20	19	18	17	16	15	14	13	12	11	10	9	8	7	6	5	4	3	2	1	0
Id																																			A
Reset 0x00000000				**0**	**0**	**0**	**0**	**0**	**0**	**0**	**0**	**0**	**0**	**0**	**0**	**0**	**0**	**0**	**0**	**0**	**0**	**0**	**0**	**0**	**0**	**0**	**0**	**0**	**0**	**0**	**0**	**0**	**0**	**0**	**0**
Id	**RW**	**Field**	**Value Id**	**Value**								**Description**																							
A	RW	DCDCEN										Enable or disable DC/DC converter																							
			Disabled	0								Disable																							
			Enabled	1								Enable																							

18.9.12 RAM[0].POWER

Address offset: 0x900

RAM0 power control register

Bit number				31	30	29	28	27	26	25	24	23	22	21	20	19	18	17	16	15	14	13	12	11	10	9	8	7	6	5	4	3	2	1	0
Id																		D	C															B	A
Reset 0x0000FFFF				**0**	**0**	**0**	**0**	**0**	**0**	**0**	**0**	**0**	**0**	**0**	**0**	**0**	**0**	**0**	**0**	**1**	**1**	**1**	**1**	**1**	**1**	**1**	**1**	**1**	**1**	**1**	**1**	**1**	**1**	**1**	**1**
Id	**RW**	**Field**	**Value Id**	**Value**								**Description**																							
A	RW	S0POWER										Keep RAM section S0 ON or OFF in System ON mode.																							
												RAM sections are always retained when ON, but can also be retained when OFF dependent on the settings in S0RETENTION. All RAM sections will be OFF in System OFF mode.																							
			Off	0								Off																							

Bit number				31	30	29	28	27	26	25	24	23	22	21	20	19	18	17	16	15	14	13	12	11	10	9	8	7	6	5	4	3	2	1	0
Id																		D	C															B	A
Reset 0x0000FFFF				**0**	**0**	**0**	**0**	**0**	**0**	**0**	**0**	**0**	**0**	**0**	**0**	**0**	**0**	**0**	**0**	**1**	**1**	**1**	**1**	**1**	**1**	**1**	**1**	**1**	**1**	**1**	**1**	**1**	**1**	**1**	**1**
Id	**RW**	**Field**	**Value Id**	**Value**								**Description**																							
			On	1								On																							
B	RW	S1POWER										Keep RAM section S1 ON or OFF in System ON mode. RAM sections are always retained when ON, but can also be retained when OFF dependent on the settings in S1RETENTION. All RAM sections will be OFF in System OFF mode.																										
			Off	0								Off																							
			On	1								On																							
C	RW	S0RETENTION										Keep retention on RAM section S0 when RAM section is in OFF																							
			Off	0								Off																							
			On	1								On																							
D	RW	S1RETENTION										Keep retention on RAM section S1 when RAM section is in OFF																							
			Off	0								Off																							
			On	1								On																							

18.9.13 RAM[0].POWERSET

Address offset: 0x904

RAM0 power control set register

When read, this register will return the value of the POWER register.

Bit number				31	30	29	28	27	26	25	24	23	22	21	20	19	18	17	16	15	14	13	12	11	10	9	8	7	6	5	4	3	2	1	0
Id																		D	C															B	A
Reset 0x0000FFFF				**0**	**0**	**0**	**0**	**0**	**0**	**0**	**0**	**0**	**0**	**0**	**0**	**0**	**0**	**0**	**0**	**1**	**1**	**1**	**1**	**1**	**1**	**1**	**1**	**1**	**1**	**1**	**1**	**1**	**1**	**1**	**1**
Id	**RW**	**Field**	**Value Id**	**Value**								**Description**																							
A	W	S0POWER										Keep RAM section S0 of RAM0 on or off in System ON mode																							
			On	1								On																							
B	W	S1POWER										Keep RAM section S1 of RAM0 on or off in System ON mode																							
			On	1								On																							
C	W	S0RETENTION										Keep retention on RAM section S0 when RAM section is switched off																							
			On	1								On																							
D	W	S1RETENTION										Keep retention on RAM section S1 when RAM section is switched off																							
			On	1								On																							

18.9.14 RAM[0].POWERCLR

Address offset: 0x908

RAM0 power control clear register

When read, this register will return the value of the POWER register.

Bit number				31	30	29	28	27	26	25	24	23	22	21	20	19	18	17	16	15	14	13	12	11	10	9	8	7	6	5	4	3	2	1	0
Id																		D	C															B	A
Reset 0x0000FFFF				**0**	**0**	**0**	**0**	**0**	**0**	**0**	**0**	**0**	**0**	**0**	**0**	**0**	**0**	**0**	**0**	**1**	**1**	**1**	**1**	**1**	**1**	**1**	**1**	**1**	**1**	**1**	**1**	**1**	**1**	**1**	**1**
Id	**RW**	**Field**	**Value Id**	**Value**								**Description**																							
A	W	S0POWER										Keep RAM section S0 of RAM0 on or off in System ON mode																							
			Off	1								Off																							
B	W	S1POWER										Keep RAM section S1 of RAM0 on or off in System ON mode																							
			Off	1								Off																							
C	W	S0RETENTION										Keep retention on RAM section S0 when RAM section is switched off																							
			Off	1								Off																							
D	W	S1RETENTION										Keep retention on RAM section S1 when RAM section is switched off																							

Bit number				31	30	29	28	27	26	25	24	23	22	21	20	19	18	17	16	15	14	13	12	11	10	9	8	7	6	5	4	3	2	1	0
Id																		D	C															B	A
Reset 0x0000FFFF				**0**	**0**	**0**	**0**	**0**	**0**	**0**	**0**	**0**	**0**	**0**	**0**	**0**	**0**	**0**	**0**	**1**	**1**	**1**	**1**	**1**	**1**	**1**	**1**	**1**	**1**	**1**	**1**	**1**	**1**	**1**	**1**
Id	**RW**	**Field**	**Value Id**	**Value**								**Description**																							
			Off	1								Off																							

18.9.15 RAM[1].POWER

Address offset: 0x910

RAM1 power control register

Bit number				31	30	29	28	27	26	25	24	23	22	21	20	19	18	17	16	15	14	13	12	11	10	9	8	7	6	5	4	3	2	1	0
Id																		D	C															B	A
Reset 0x0000FFFF				**0**	**0**	**0**	**0**	**0**	**0**	**0**	**0**	**0**	**0**	**0**	**0**	**0**	**0**	**0**	**0**	**1**	**1**	**1**	**1**	**1**	**1**	**1**	**1**	**1**	**1**	**1**	**1**	**1**	**1**	**1**	**1**
Id	**RW**	**Field**	**Value Id**	**Value**								**Description**																							
A	RW	S0POWER										Keep RAM section S0 ON or OFF in System ON mode. RAM sections are always retained when ON, but can also be retained when OFF dependent on the settings in S0RETENTION. All RAM sections will be OFF in System OFF mode.																										
			Off	0								Off																							
			On	1								On																							
B	RW	S1POWER										Keep RAM section S1 ON or OFF in System ON mode. RAM sections are always retained when ON, but can also be retained when OFF dependent on the settings in S1RETENTION. All RAM sections will be OFF in System OFF mode.																										
			Off	0								Off																							
			On	1								On																							
C	RW	S0RETENTION										Keep retention on RAM section S0 when RAM section is in OFF																							
			Off	0								Off																							
			On	1								On																							
D	RW	S1RETENTION										Keep retention on RAM section S1 when RAM section is in OFF																							
			Off	0								Off																							
			On	1								On																							

18.9.16 RAM[1].POWERSET

Address offset: 0x914

RAM1 power control set register

When read, this register will return the value of the POWER register.

Bit number				31	30	29	28	27	26	25	24	23	22	21	20	19	18	17	16	15	14	13	12	11	10	9	8	7	6	5	4	3	2	1	0
Id																		D	C															B	A
Reset 0x0000FFFF				**0**	**0**	**0**	**0**	**0**	**0**	**0**	**0**	**0**	**0**	**0**	**0**	**0**	**0**	**0**	**0**	**1**	**1**	**1**	**1**	**1**	**1**	**1**	**1**	**1**	**1**	**1**	**1**	**1**	**1**	**1**	**1**
Id	**RW**	**Field**	**Value Id**	**Value**								**Description**																							
A	W	S0POWER										Keep RAM section S0 of RAM1 on or off in System ON mode																							
			On	1								On																							
B	W	S1POWER										Keep RAM section S1 of RAM1 on or off in System ON mode																							
			On	1								On																							
C	W	S0RETENTION										Keep retention on RAM section S0 when RAM section is switched off																							
			On	1								On																							
D	W	S1RETENTION										Keep retention on RAM section S1 when RAM section is switched off																							
			On	1								On																							

18.9.17 RAM[1].POWERCLR

Address offset: 0x918

RAM1 power control clear register

When read, this register will return the value of the POWER register.

Bit number	31	30	29	28	27	26	25	24	23	22	21	20	19	18	17	16	15	14	13	12	11	10	9	8	7	6	5	4	3	2	1	0
Id															D	C															B	A
Reset 0x0000FFFF	**0**	**0**	**0**	**0**	**0**	**0**	**0**	**0**	**0**	**0**	**0**	**0**	**0**	**0**	**0**	**0**	**1**	**1**	**1**	**1**	**1**	**1**	**1**	**1**	**1**	**1**	**1**	**1**	**1**	**1**	**1**	**1**

Id	RW	Field	Value Id	Value	Description
A	W	S0POWER			Keep RAM section S0 of RAM1 on or off in System ON mode
			Off	1	Off
B	W	S1POWER			Keep RAM section S1 of RAM1 on or off in System ON mode
			Off	1	Off
C	W	S0RETENTION			Keep retention on RAM section S0 when RAM section is switched off
			Off	1	Off
D	W	S1RETENTION			Keep retention on RAM section S1 when RAM section is switched off
			Off	1	Off

18.9.18 RAM[2].POWER

Address offset: 0x920

RAM2 power control register

Bit number	31	30	29	28	27	26	25	24	23	22	21	20	19	18	17	16	15	14	13	12	11	10	9	8	7	6	5	4	3	2	1	0
Id															D	C															B	A
Reset 0x0000FFFF	**0**	**0**	**0**	**0**	**0**	**0**	**0**	**0**	**0**	**0**	**0**	**0**	**0**	**0**	**0**	**0**	**1**	**1**	**1**	**1**	**1**	**1**	**1**	**1**	**1**	**1**	**1**	**1**	**1**	**1**	**1**	**1**

Id	RW	Field	Value Id	Value	Description
A	RW	S0POWER			Keep RAM section S0 ON or OFF in System ON mode. RAM sections are always retained when ON, but can also be retained when OFF dependent on the settings in S0RETENTION. All RAM sections will be OFF in System OFF mode.
			Off	0	Off
			On	1	On
B	RW	S1POWER			Keep RAM section S1 ON or OFF in System ON mode. RAM sections are always retained when ON, but can also be retained when OFF dependent on the settings in S1RETENTION. All RAM sections will be OFF in System OFF mode.
			Off	0	Off
			On	1	On
C	RW	S0RETENTION			Keep retention on RAM section S0 when RAM section is in OFF
			Off	0	Off
			On	1	On
D	RW	S1RETENTION			Keep retention on RAM section S1 when RAM section is in OFF
			Off	0	Off
			On	1	On

18.9.19 RAM[2].POWERSET

Address offset: 0x924

RAM2 power control set register

When read, this register will return the value of the POWER register.

Bit number	31	30	29	28	27	26	25	24	23	22	21	20	19	18	17	16	15	14	13	12	11	10	9	8	7	6	5	4	3	2	1	0
Id															D	C															B	A
Reset 0x0000FFFF	**0**	**0**	**0**	**0**	**0**	**0**	**0**	**0**	**0**	**0**	**0**	**0**	**0**	**0**	**0**	**0**	**1**	**1**	**1**	**1**	**1**	**1**	**1**	**1**	**1**	**1**	**1**	**1**	**1**	**1**	**1**	**1**

Id	RW	Field	Value Id	Value	Description
A	W	S0POWER			Keep RAM section S0 of RAM2 on or off in System ON mode
			On	1	On

Bit number				31	30	29	28	27	26	25	24	23	22	21	20	19	18	17	16	15	14	13	12	11	10	9	8	7	6	5	4	3	2	1	0
Id																		D	C															B	A
Reset 0x0000FFFF				**0**	**0**	**0**	**0**	**0**	**0**	**0**	**0**	**0**	**0**	**0**	**0**	**0**	**0**	**0**	**0**	**1**	**1**	**1**	**1**	**1**	**1**	**1**	**1**	**1**	**1**	**1**	**1**	**1**	**1**	**1**	**1**
Id	**RW**	**Field**	**Value Id**	**Value**								**Description**																							
B	W	S1POWER										Keep RAM section S1 of RAM2 on or off in System ON mode																							
			On	1								On																							
C	W	S0RETENTION										Keep retention on RAM section S0 when RAM section is switched off																							
			On	1								On																							
D	W	S1RETENTION										Keep retention on RAM section S1 when RAM section is switched off																							
			On	1								On																							

18.9.20 RAM[2].POWERCLR

Address offset: 0x928

RAM2 power control clear register

When read, this register will return the value of the POWER register.

Bit number				31	30	29	28	27	26	25	24	23	22	21	20	19	18	17	16	15	14	13	12	11	10	9	8	7	6	5	4	3	2	1	0
Id																		D	C															B	A
Reset 0x0000FFFF				**0**	**0**	**0**	**0**	**0**	**0**	**0**	**0**	**0**	**0**	**0**	**0**	**0**	**0**	**0**	**0**	**1**	**1**	**1**	**1**	**1**	**1**	**1**	**1**	**1**	**1**	**1**	**1**	**1**	**1**	**1**	**1**
Id	**RW**	**Field**	**Value Id**	**Value**								**Description**																							
A	W	S0POWER										Keep RAM section S0 of RAM2 on or off in System ON mode																							
			Off	1								Off																							
B	W	S1POWER										Keep RAM section S1 of RAM2 on or off in System ON mode																							
			Off	1								Off																							
C	W	S0RETENTION										Keep retention on RAM section S0 when RAM section is switched off																							
			Off	1								Off																							
D	W	S1RETENTION										Keep retention on RAM section S1 when RAM section is switched off																							
			Off	1								Off																							

18.9.21 RAM[3].POWER

Address offset: 0x930

RAM3 power control register

Bit number				31	30	29	28	27	26	25	24	23	22	21	20	19	18	17	16	15	14	13	12	11	10	9	8	7	6	5	4	3	2	1	0
Id																		D	C															B	A
Reset 0x0000FFFF				**0**	**0**	**0**	**0**	**0**	**0**	**0**	**0**	**0**	**0**	**0**	**0**	**0**	**0**	**0**	**0**	**1**	**1**	**1**	**1**	**1**	**1**	**1**	**1**	**1**	**1**	**1**	**1**	**1**	**1**	**1**	**1**
Id	**RW**	**Field**	**Value Id**	**Value**								**Description**																							
A	RW	S0POWER										Keep RAM section S0 ON or OFF in System ON mode. RAM sections are always retained when ON, but can also be retained when OFF dependent on the settings in S0RETENTION. All RAM sections will be OFF in System OFF mode.																											
			Off	0								Off																							
			On	1								On																							
B	RW	S1POWER										Keep RAM section S1 ON or OFF in System ON mode. RAM sections are always retained when ON, but can also be retained when OFF dependent on the settings in S1RETENTION. All RAM sections will be OFF in System OFF mode.																											
			Off	0								Off																							
			On	1								On																							
C	RW	S0RETENTION										Keep retention on RAM section S0 when RAM section is in OFF																							
			Off	0								Off																							
			On	1								On																							

Bit number				31	30	29	28	27	26	25	24	23	22	21	20	19	18	17	16	15	14	13	12	11	10	9	8	7	6	5	4	3	2	1	0
Id																		D	C															B	A
Reset 0x0000FFFF				**0**	**0**	**0**	**0**	**0**	**0**	**0**	**0**	**0**	**0**	**0**	**0**	**0**	**0**	**0**	**0**	**1**	**1**	**1**	**1**	**1**	**1**	**1**	**1**	**1**	**1**	**1**	**1**	**1**	**1**	**1**	**1**
Id	**RW**	**Field**	**Value Id**	**Value**								**Description**																							
D	RW	S1RETENTION										Keep retention on RAM section S1 when RAM section is in OFF																							
			Off	0								Off																							
			On	1								On																							

18.9.22 RAM[3].POWERSET

Address offset: 0x934

RAM3 power control set register

When read, this register will return the value of the POWER register.

Bit number				31	30	29	28	27	26	25	24	23	22	21	20	19	18	17	16	15	14	13	12	11	10	9	8	7	6	5	4	3	2	1	0
Id																		D	C															B	A
Reset 0x0000FFFF				**0**	**0**	**0**	**0**	**0**	**0**	**0**	**0**	**0**	**0**	**0**	**0**	**0**	**0**	**0**	**0**	**1**	**1**	**1**	**1**	**1**	**1**	**1**	**1**	**1**	**1**	**1**	**1**	**1**	**1**	**1**	**1**
Id	**RW**	**Field**	**Value Id**	**Value**								**Description**																							
A	W	S0POWER										Keep RAM section S0 of RAM3 on or off in System ON mode																							
			On	1								On																							
B	W	S1POWER										Keep RAM section S1 of RAM3 on or off in System ON mode																							
			On	1								On																							
C	W	S0RETENTION										Keep retention on RAM section S0 when RAM section is switched off																							
			On	1								On																							
D	W	S1RETENTION										Keep retention on RAM section S1 when RAM section is switched off																							
			On	1								On																							

18.9.23 RAM[3].POWERCLR

Address offset: 0x938

RAM3 power control clear register

When read, this register will return the value of the POWER register.

Bit number				31	30	29	28	27	26	25	24	23	22	21	20	19	18	17	16	15	14	13	12	11	10	9	8	7	6	5	4	3	2	1	0
Id																		D	C															B	A
Reset 0x0000FFFF				**0**	**0**	**0**	**0**	**0**	**0**	**0**	**0**	**0**	**0**	**0**	**0**	**0**	**0**	**0**	**0**	**1**	**1**	**1**	**1**	**1**	**1**	**1**	**1**	**1**	**1**	**1**	**1**	**1**	**1**	**1**	**1**
Id	**RW**	**Field**	**Value Id**	**Value**								**Description**																							
A	W	S0POWER										Keep RAM section S0 of RAM3 on or off in System ON mode																							
			Off	1								Off																							
B	W	S1POWER										Keep RAM section S1 of RAM3 on or off in System ON mode																							
			Off	1								Off																							
C	W	S0RETENTION										Keep retention on RAM section S0 when RAM section is switched off																							
			Off	1								Off																							
D	W	S1RETENTION										Keep retention on RAM section S1 when RAM section is switched off																							
			Off	1								Off																							

18.9.24 RAM[4].POWER

Address offset: 0x940

RAM4 power control register

Bit number				31	30	29	28	27	26	25	24	23	22	21	20	19	18	17	16	15	14	13	12	11	10	9	8	7	6	5	4	3	2	1	0
Id																		D	C															B	A
Reset 0x0000FFFF				**0**	**0**	**0**	**0**	**0**	**0**	**0**	**0**	**0**	**0**	**0**	**0**	**0**	**0**	**0**	**0**	**1**	**1**	**1**	**1**	**1**	**1**	**1**	**1**	**1**	**1**	**1**	**1**	**1**	**1**	**1**	**1**
Id	**RW**	**Field**	**Value Id**	**Value**																															
A	RW	S0POWER																																	
			Off	0																															
			On	1																															
B	RW	S1POWER																																	
			Off	0																															
			On	1																															
C	RW	S0RETENTION																																	
			Off	0																															
			On	1																															
D	RW	S1RETENTION																																	
			Off	0																															
			On	1																															

18.9.25 RAM[4].POWERSET

Address offset: 0x944

RAM4 power control set register

When read, this register will return the value of the POWER register.

Bit number				31	30	29	28	27	26	25	24	23	22	21	20	19	18	17	16	15	14	13	12	11	10	9	8	7	6	5	4	3	2	1	0
Id																		D	C															B	A
Reset 0x0000FFFF				**0**	**0**	**0**	**0**	**0**	**0**	**0**	**0**	**0**	**0**	**0**	**0**	**0**	**0**	**0**	**0**	**1**	**1**	**1**	**1**	**1**	**1**	**1**	**1**	**1**	**1**	**1**	**1**	**1**	**1**	**1**	**1**
Id	**RW**	**Field**	**Value Id**	**Value**																															
A	W	S0POWER																																	
			On	1																															
B	W	S1POWER																																	
			On	1																															
C	W	S0RETENTION																																	
			On	1																															
D	W	S1RETENTION																																	
			On	1																															

18.9.26 RAM[4].POWERCLR

Address offset: 0x948

RAM4 power control clear register

When read, this register will return the value of the POWER register.

Bit number				31	30	29	28	27	26	25	24	23	22	21	20	19	18	17	16	15	14	13	12	11	10	9	8	7	6	5	4	3	2	1	0
Id																		D	C															B	A
Reset 0x0000FFFF				**0**	**0**	**0**	**0**	**0**	**0**	**0**	**0**	**0**	**0**	**0**	**0**	**0**	**0**	**0**	**0**	**1**	**1**	**1**	**1**	**1**	**1**	**1**	**1**	**1**	**1**	**1**	**1**	**1**	**1**	**1**	**1**
Id	**RW**	**Field**	**Value Id**	**Value**																															
A	W	S0POWER																																	
			Off	1																															
B	W	S1POWER																																	

Bit number				31	30	29	28	27	26	25	24	23	22	21	20	19	18	17	16	15	14	13	12	11	10	9	8	7	6	5	4	3	2	1	0
Id																		D	C															B	A
Reset 0x0000FFFF				**0**	**0**	**0**	**0**	**0**	**0**	**0**	**0**	**0**	**0**	**0**	**0**	**0**	**0**	**0**	**0**	**1**	**1**	**1**	**1**	**1**	**1**	**1**	**1**	**1**	**1**	**1**	**1**	**1**	**1**	**1**	**1**
Id	**RW**	**Field**	**Value Id**	**Value**																															
			Off	1																															
C	W	S0RETENTION																																	
			Off	1																															
D	W	S1RETENTION																																	
			Off	1																															

18.9.27 RAM[5].POWER

Address offset: 0x950

RAM5 power control register

Bit number				31	30	29	28	27	26	25	24	23	22	21	20	19	18	17	16	15	14	13	12	11	10	9	8	7	6	5	4	3	2	1	0
Id																		D	C															B	A
Reset 0x0000FFFF				**0**	**0**	**0**	**0**	**0**	**0**	**0**	**0**	**0**	**0**	**0**	**0**	**0**	**0**	**0**	**0**	**1**	**1**	**1**	**1**	**1**	**1**	**1**	**1**	**1**	**1**	**1**	**1**	**1**	**1**	**1**	**1**
Id	**RW**	**Field**	**Value Id**	**Value**																															
A	RW	S0POWER																																	
			Off	0																															
			On	1																															
B	RW	S1POWER																																	
			Off	0																															
			On	1																															
C	RW	S0RETENTION																																	
			Off	0																															
			On	1																															
D	RW	S1RETENTION																																	
			Off	0																															
			On	1																															

18.9.28 RAM[5].POWERSET

Address offset: 0x954

RAM5 power control set register

When read, this register will return the value of the POWER register.

Bit number				31	30	29	28	27	26	25	24	23	22	21	20	19	18	17	16	15	14	13	12	11	10	9	8	7	6	5	4	3	2	1	0
Id																		D	C															B	A
Reset 0x0000FFFF				**0**	**0**	**0**	**0**	**0**	**0**	**0**	**0**	**0**	**0**	**0**	**0**	**0**	**0**	**0**	**0**	**1**	**1**	**1**	**1**	**1**	**1**	**1**	**1**	**1**	**1**	**1**	**1**	**1**	**1**	**1**	**1**
Id	**RW**	**Field**	**Value Id**	**Value**																															
A	W	S0POWER																																	
			On	1																															
B	W	S1POWER																																	
			On	1																															
C	W	S0RETENTION																																	
			On	1																															

Bit number				31	30	29	28	27	26	25	24	23	22	21	20	19	18	17	16	15	14	13	12	11	10	9	8	7	6	5	4	3	2	1	0
Id																		D	C															B	A
Reset 0x0000FFFF				**0**	**0**	**0**	**0**	**0**	**0**	**0**	**0**	**0**	**0**	**0**	**0**	**0**	**0**	**0**	**0**	**1**	**1**	**1**	**1**	**1**	**1**	**1**	**1**	**1**	**1**	**1**	**1**	**1**	**1**	**1**	**1**
Id	**RW**	**Field**	**Value Id**	**Value**								**Description**																							
D	W	S1RETENTION										Keep retention on RAM section S1 when RAM section is switched off																							
			On	1								On																							

18.9.29 RAM[5].POWERCLR

Address offset: 0x958

RAM5 power control clear register

When read, this register will return the value of the POWER register.

Bit number				31	30	29	28	27	26	25	24	23	22	21	20	19	18	17	16	15	14	13	12	11	10	9	8	7	6	5	4	3	2	1	0
Id																		D	C															B	A
Reset 0x0000FFFF				**0**	**0**	**0**	**0**	**0**	**0**	**0**	**0**	**0**	**0**	**0**	**0**	**0**	**0**	**0**	**0**	**1**	**1**	**1**	**1**	**1**	**1**	**1**	**1**	**1**	**1**	**1**	**1**	**1**	**1**	**1**	**1**
Id	**RW**	**Field**	**Value Id**	**Value**								**Description**																							
A	W	S0POWER										Keep RAM section S0 of RAM5 on or off in System ON mode																							
			Off	1								Off																							
B	W	S1POWER										Keep RAM section S1 of RAM5 on or off in System ON mode																							
			Off	1								Off																							
C	W	S0RETENTION										Keep retention on RAM section S0 when RAM section is switched off																							
			Off	1								Off																							
D	W	S1RETENTION										Keep retention on RAM section S1 when RAM section is switched off																							
			Off	1								Off																							

18.9.30 RAM[6].POWER

Address offset: 0x960

RAM6 power control register

Bit number				31	30	29	28	27	26	25	24	23	22	21	20	19	18	17	16	15	14	13	12	11	10	9	8	7	6	5	4	3	2	1	0
Id																		D	C															B	A
Reset 0x0000FFFF				**0**	**0**	**0**	**0**	**0**	**0**	**0**	**0**	**0**	**0**	**0**	**0**	**0**	**0**	**0**	**0**	**1**	**1**	**1**	**1**	**1**	**1**	**1**	**1**	**1**	**1**	**1**	**1**	**1**	**1**	**1**	**1**
Id	**RW**	**Field**	**Value Id**	**Value**								**Description**																							
A	RW	S0POWER										Keep RAM section S0 ON or OFF in System ON mode. RAM sections are always retained when ON, but can also be retained when OFF dependent on the settings in S0RETENTION. All RAM sections will be OFF in System OFF mode.																									
			Off	0								Off																							
			On	1								On																							
B	RW	S1POWER										Keep RAM section S1 ON or OFF in System ON mode. RAM sections are always retained when ON, but can also be retained when OFF dependent on the settings in S1RETENTION. All RAM sections will be OFF in System OFF mode.																									
			Off	0								Off																							
			On	1								On																							
C	RW	S0RETENTION										Keep retention on RAM section S0 when RAM section is in OFF																							
			Off	0								Off																							
			On	1								On																							
D	RW	S1RETENTION										Keep retention on RAM section S1 when RAM section is in OFF																							
			Off	0								Off																							
			On	1								On																							

18.9.31 RAM[6].POWERSET

Address offset: 0x964

RAM6 power control set register

When read, this register will return the value of the POWER register.

Bit number				31	30	29	28	27	26	25	24	23	22	21	20	19	18	17	16	15	14	13	12	11	10	9	8	7	6	5	4	3	2	1	0
Id																		D	C															B	A
Reset 0x0000FFFF				**0**	**0**	**0**	**0**	**0**	**0**	**0**	**0**	**0**	**0**	**0**	**0**	**0**	**0**	**0**	**0**	**1**	**1**	**1**	**1**	**1**	**1**	**1**	**1**	**1**	**1**	**1**	**1**	**1**	**1**	**1**	**1**
Id	**RW**	**Field**	**Value Id**	**Value**																															
A	W	S0POWER																																	
			On	1																															
B	W	S1POWER																																	
			On	1																															
C	W	S0RETENTION																																	
			On	1																															
D	W	S1RETENTION																																	
			On	1																															

18.9.32 RAM[6].POWERCLR

Address offset: 0x968

RAM6 power control clear register

When read, this register will return the value of the POWER register.

Bit number				31	30	29	28	27	26	25	24	23	22	21	20	19	18	17	16	15	14	13	12	11	10	9	8	7	6	5	4	3	2	1	0
Id																		D	C															B	A
Reset 0x0000FFFF				**0**	**0**	**0**	**0**	**0**	**0**	**0**	**0**	**0**	**0**	**0**	**0**	**0**	**0**	**0**	**0**	**1**	**1**	**1**	**1**	**1**	**1**	**1**	**1**	**1**	**1**	**1**	**1**	**1**	**1**	**1**	**1**
Id	**RW**	**Field**	**Value Id**	**Value**																															
A	W	S0POWER																																	
			Off	1																															
B	W	S1POWER																																	
			Off	1																															
C	W	S0RETENTION																																	
			Off	1																															
D	W	S1RETENTION																																	
			Off	1																															

18.9.33 RAM[7].POWER

Address offset: 0x970

RAM7 power control register

Bit number				31	30	29	28	27	26	25	24	23	22	21	20	19	18	17	16	15	14	13	12	11	10	9	8	7	6	5	4	3	2	1	0
Id																		D	C															B	A
Reset 0x0000FFFF				**0**	**0**	**0**	**0**	**0**	**0**	**0**	**0**	**0**	**0**	**0**	**0**	**0**	**0**	**0**	**0**	**1**	**1**	**1**	**1**	**1**	**1**	**1**	**1**	**1**	**1**	**1**	**1**	**1**	**1**	**1**	**1**
Id	**RW**	**Field**	**Value Id**	**Value**																															
A	RW	S0POWER																																	
			Off	0																															
			On	1																															
B	RW	S1POWER																																	

Bit number				31	30	29	28	27	26	25	24	23	22	21	20	19	18	17	16	15	14	13	12	11	10	9	8	7	6	5	4	3	2	1	0
Id																		D	C															B	A
Reset 0x0000FFFF				**0**	**0**	**0**	**0**	**0**	**0**	**0**	**0**	**0**	**0**	**0**	**0**	**0**	**0**	**0**	**0**	**1**	**1**	**1**	**1**	**1**	**1**	**1**	**1**	**1**	**1**	**1**	**1**	**1**	**1**	**1**	**1**
Id	**RW**	**Field**	**Value Id**	**Value**								**Description**																							
												RAM sections are always retained when ON, but can also be retained when OFF dependent on the settings in S1RETENTION. All RAM sections will be OFF in System OFF mode.																							
			Off	0								Off																							
			On	1								On																							
C	RW	S0RETENTION										Keep retention on RAM section S0 when RAM section is in OFF																							
			Off	0								Off																							
			On	1								On																							
D	RW	S1RETENTION										Keep retention on RAM section S1 when RAM section is in OFF																							
			Off	0								Off																							
			On	1								On																							

18.9.34 RAM[7].POWERSET

Address offset: 0x974

RAM7 power control set register

When read, this register will return the value of the POWER register.

Bit number				31	30	29	28	27	26	25	24	23	22	21	20	19	18	17	16	15	14	13	12	11	10	9	8	7	6	5	4	3	2	1	0
Id																		D	C															B	A
Reset 0x0000FFFF				**0**	**0**	**0**	**0**	**0**	**0**	**0**	**0**	**0**	**0**	**0**	**0**	**0**	**0**	**0**	**0**	**1**	**1**	**1**	**1**	**1**	**1**	**1**	**1**	**1**	**1**	**1**	**1**	**1**	**1**	**1**	**1**
Id	**RW**	**Field**	**Value Id**	**Value**								**Description**																							
A	W	S0POWER										Keep RAM section S0 of RAM7 on or off in System ON mode																							
			On	1								On																							
B	W	S1POWER										Keep RAM section S1 of RAM7 on or off in System ON mode																							
			On	1								On																							
C	W	S0RETENTION										Keep retention on RAM section S0 when RAM section is switched off																							
			On	1								On																							
D	W	S1RETENTION										Keep retention on RAM section S1 when RAM section is switched off																							
			On	1								On																							

18.9.35 RAM[7].POWERCLR

Address offset: 0x978

RAM7 power control clear register

When read, this register will return the value of the POWER register.

Bit number				31	30	29	28	27	26	25	24	23	22	21	20	19	18	17	16	15	14	13	12	11	10	9	8	7	6	5	4	3	2	1	0
Id																		D	C															B	A
Reset 0x0000FFFF				**0**	**0**	**0**	**0**	**0**	**0**	**0**	**0**	**0**	**0**	**0**	**0**	**0**	**0**	**0**	**0**	**1**	**1**	**1**	**1**	**1**	**1**	**1**	**1**	**1**	**1**	**1**	**1**	**1**	**1**	**1**	**1**
Id	**RW**	**Field**	**Value Id**	**Value**								**Description**																							
A	W	S0POWER										Keep RAM section S0 of RAM7 on or off in System ON mode																							
			Off	1								Off																							
B	W	S1POWER										Keep RAM section S1 of RAM7 on or off in System ON mode																							
			Off	1								Off																							
C	W	S0RETENTION										Keep retention on RAM section S0 when RAM section is switched off																							
			Off	1								Off																							
D	W	S1RETENTION										Keep retention on RAM section S1 when RAM section is switched off																							
			Off	1								Off																							

18.10 Electrical Specification

18.10.1 Current consumption, sleep

Symbol	Description	Min.	Typ.	Max.	Units
I_{OFF}	System OFF current, no RAM retention		0.7		µA
I_{ON}	System ON base current, no RAM retention		1.2		µA
I_{RAM}	Additional RAM retention current per 4 KB RAM section		20		nA

18.10.2 Device startup times

Symbol	Description	Min.	Typ.	Max.	Units
t_{POR}	Time in Power on Reset after VDD reaches 1.7 V for all supply voltages and temperatures. Dependent on supply rise time. [8]				
$t_{POR,10us}$	VDD rise time 10us		1		ms
$t_{POR,10ms}$	VDD rise time 10ms		9		ms
$t_{POR,60ms}$	VDD rise time 60ms		23		ms
t_{PINR}	If a GPIO pin is configured as reset, the maximum time taken to pull up the pin and release reset after power on reset. Dependent on the pin capacitive load (C)[9]: t=5RC, R = 13kOhm				
$t_{PINR,500nF}$	C = 500nF			32.5	ms
$t_{PINR,10uF}$	C = 10uF			650	ms
t_{R2ON}	Time from reset to ON (CPU execute)				
$t_{R2ON,NOTCONF}$	If reset pin not configured	tPOR			ms
$t_{R2ON,CONF}$	If reset pin configured	tPOR + tPINR			ms
t_{OFF2ON}	Time from OFF to CPU execute		16.5		µs
$t_{IDLE2CPU}$	Time from IDLE to CPU execute		3.0		µs
$t_{EVTSET,CL1}$	Time from HW event to PPI event in Constant Latency System ON mode		0.0625		µs
$t_{EVTSET,CL0}$	Time from HW event to PPI event in Low Power System ON mode		0.0625		µs

18.10.3 Power fail comparator

Symbol	Description	Min.	Typ.	Max.	Units
I_{POF}	Current consumption when enabled[10]		<4		µA
V_{POF}	Nominal power level warning thresholds (falling supply voltage). Levels are configurable between Min. and Max. in 100mV increments.	1.7		2.8	V
V_{POFTOL}	Threshold voltage tolerance		±1	±5	%
$V_{POFHYST}$	Threshold voltage hysteresis		50		mV
$V_{BOR,OFF}$	Brown out reset voltage range SYSTEM OFF mode	1.2		1.7	V
$V_{BOR,ON}$	Brown out reset voltage range SYSTEM ON mode	1.5		1.7	V

[8] A step increase in supply voltage of 300 mV or more, with rise time of 300 ms or less, within the valid supply range, may result in a system reset.

[9] To decrease maximum time a device could hold in reset, a strong external pullup resistor can be used.

[10] To save power, POF will not operate nor consume in System OFF, or while HFCLK is not running, even if left enabled by software

19 CLOCK — Clock control

The clock control system can source the system clocks from a range of internal or external high and low frequency oscillators and distribute them to modules based upon a module's individual requirements. Clock distribution is automated and grouped independently by module to limit current consumption in unused branches of the clock tree.

Listed here are the main features for CLOCK:

- 64 MHz on-chip oscillator
- 64 MHz crystal oscillator, using external 32 MHz crystal
- 32.768 kHz +/-250 ppm RC oscillator
- 32.768 kHz crystal oscillator
- 32.768 kHz synthesized from high frequency oscillator
- Firmware (FW) override control of oscillator activity for low latency start up
- Automatic oscillator and clock control, and distribution for ultra-low power

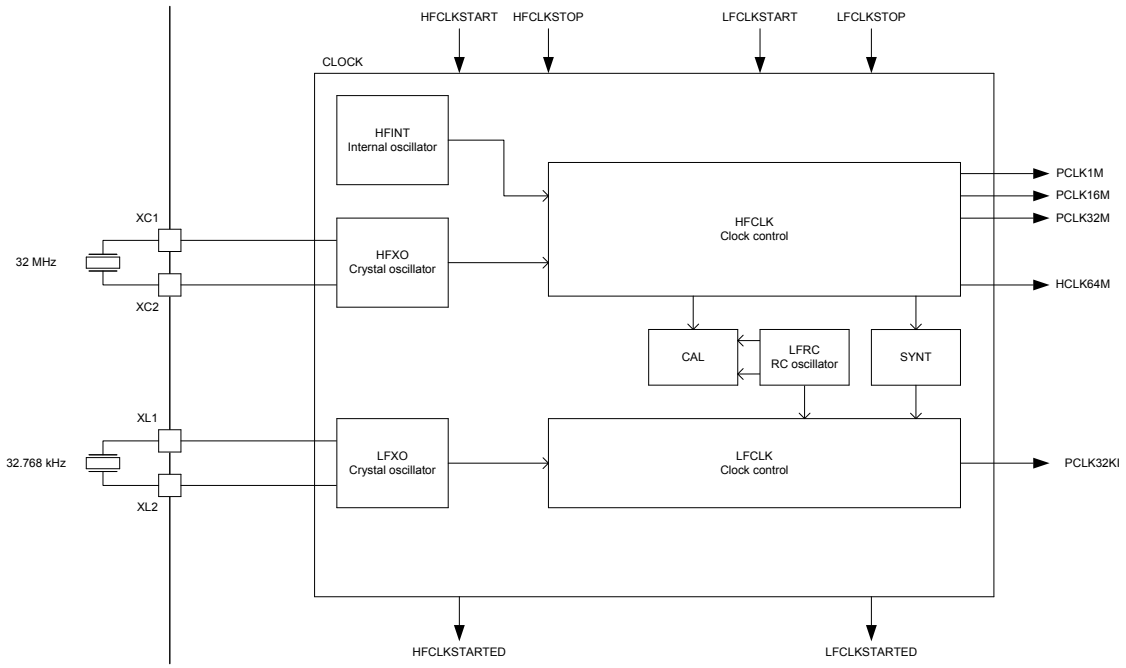

Figure 16: Clock control

19.1 HFCLK clock controller

The HFCLK clock controller provides the following clocks to the system.

- HCLK64M: 64 MHz CPU clock
- PCLK1M: 1 MHz peripheral clock
- PCLK16M: 16 MHz peripheral clock
- PCLK32M: 32 MHz peripheral clock

The HFCLK controller supports the following high frequency clock (HFCLK) sources:

- 64 MHz internal oscillator (HFINT)
- 64 MHz crystal oscillator (HFXO)

For illustration, see *Figure 16: Clock control* on page 98.

When the system requests one or more clocks from the HFCLK controller, the HFCLK controller will automatically provide them. If the system does not request any clocks provided by the HFCLK controller, the controller will enter a power saving mode.

These clocks are only available when the system is in ON mode. When the system enters ON mode, the internal oscillator (HFINT) clock source will automatically start to be able to provide the required HFCLK clock(s) for the system.

The HFINT will be used when HFCLK is requested and HFXO has not been started. The HFXO is started by triggering the HFCLKSTART task and stopped using the HFCLKSTOP task. A HFCLKSTARTED event will be generated when the HFXO has started and its frequency is stable.

The HFXO must be running to use the RADIO, NFC module or the calibration mechanism associated with the 32.768 kHz RC oscillator.

19.1.1 64 MHz crystal oscillator (HFXO)

The 64 MHz crystal oscillator (HFXO) is controlled by a 32 MHz external crystal

The crystal oscillator is designed for use with an AT-cut quartz crystal in parallel resonant mode. To achieve correct oscillation frequency, the load capacitance must match the specification in the crystal data sheet.

Figure 17: Circuit diagram of the 64 MHz crystal oscillator on page 99 shows how the 32 MHz crystal is connected to the 64 MHz crystal oscillator.

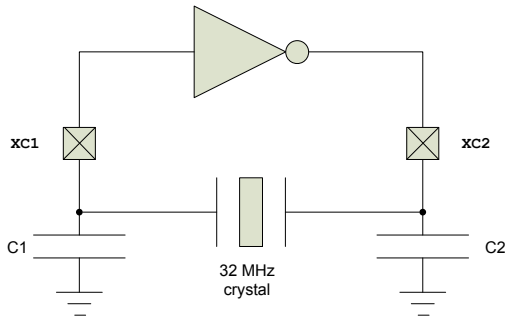

Figure 17: Circuit diagram of the 64 MHz crystal oscillator

The load capacitance (CL) is the total capacitance seen by the crystal across its terminals and is given by:

$$CL = \frac{(C1' \cdot C2')}{(C1' + C2')}$$

$$C1' = C1 + C_{pcb1} + C_{pin}$$
$$C2' = C2 + C_{pcb2} + C_{pin}$$

C1 and C2 are ceramic SMD capacitors connected between each crystal terminal and ground. For more information, see *Reference circuitry* on page 539. C_{pcb1} and C_{pcb2} are stray capacitances on the PCB. C_{pin} is the pin input capacitance on the `XC1` and `XC2` pins. See table *64 MHz crystal oscillator (HFXO)* on page 105. The load capacitors C1 and C2 should have the same value.

For reliable operation, the crystal load capacitance, shunt capacitance, equivalent series resistance, and drive level must comply with the specifications in table *64 MHz crystal oscillator (HFXO)* on page 105. It is recommended to use a crystal with lower than maximum load capacitance and/or shunt capacitance. A low load capacitance will reduce both start up time and current consumption.

19.2 LFCLK clock controller

The system supports several low frequency clock sources.

As illustrated in *Figure 16: Clock control* on page 98, the system supports the following low frequency clock sources:

- 32.768 kHz RC oscillator (LFRC)
- 32.768 kHz crystal oscillator (LFXO)
- 32.768 kHz synthesized from HFCLK (LFSYNT)

The LFCLK clock controller and all of the LFCLK clock sources are always switched off when in OFF mode.

The LFCLK clock is started by first selecting the preferred clock source in register *LFCLKSRC* on page 104 and then triggering the LFCLKSTART task. If the LFXO is selected as the clock source, the LFCLK will initially start running from the 32.768 kHz LFRC while the LFXO is starting up and automatically switch to using the LFXO once this oscillator is running. The LFCLKSTARTED event will be generated when the LFXO has been started.

The LFCLK clock is stopped by triggering the LFCLKSTOP task.

It is not allowed to write to register *LFCLKSRC* on page 104 when the LFCLK is running.

A LFCLKSTOP task will stop the LFCLK oscillator. However, the LFCLKSTOP task can only be triggered after the STATE field in register *LFCLKSTAT* on page 104 indicates a 'LFCLK running' state.

The synthesized 32.768 kHz clock depends on the HFCLK to run. If high accuracy is required for the LFCLK running off the synthesized 32.768 kHz clock, the HFCLK must be generated from the HFCLK crystal oscillator.

19.2.1 32.768 kHz RC oscillator (LFRC)

The default source of the low frequency clock (LFCLK) is the 32.768 kHz RC oscillator (LFRC).

The LFRC frequency will be affected by variation in temperature. The LFRC oscillator can be calibrated to improve accuracy by using the HFXO as a reference oscillator during calibration. See Table *Low frequency RC oscillator (LFRC)* on page 106 for details on the default and calibrated accuracy of the LFRC oscillator. The LFRC oscillator does not require additional external components.

19.2.2 Calibrating the 32.768 kHz RC oscillator

After the 32.768 kHz RC oscillator is started and running, it can be calibrated by triggering the CAL task. In this case, the HFCLK will be temporarily switched on and used as a reference.

A DONE event will be generated when calibration has finished. The calibration mechanism will only work as long as HFCLK is generated from the HFCLK crystal oscillator, it is therefore necessary to explicitly start this crystal oscillator before calibration can be started, see HFCLKSTART task.

19.2.3 Calibration timer

The calibration timer can be used to time the calibration interval of the 32.768 kHz RC oscillator.

The calibration timer is started by triggering the CTSTART task and stopped by triggering the CTSTOP task. The calibration timer will always start counting down from the value specified in CTIV and generate a CTTO timeout event when it reaches 0. The Calibration timer will stop by itself when it reaches 0.

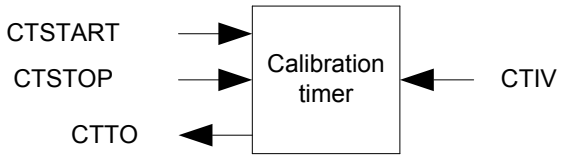

Figure 18: Calibration timer

Due to limitations in the calibration timer, only one task related to calibration, that is, CAL, CTSTART and CTSTOP, can be triggered for every period of LFCLK.

19.2.4 32.768 kHz crystal oscillator (LFXO)

For higher LFCLK accuracy (when better than +/- 250 ppm accuracy is required), the low frequency crystal oscillator (LFXO) must be used.

The 32.768 kHz crystal oscillator requires an external quartz crystal to be connected to the `XL1` and `XL2` pins in parallel resonant mode. To achieve correct oscillation frequency, the load capacitance must match the specification in the crystal data sheet, see *Low frequency crystal oscillator (LFXO)* on page 106. The `XL1` and `XL2` share pins with the GPIO.

Figure 19: Circuit diagram of the 32.768 kHz crystal oscillator on page 101 shows LFXO circuitry.

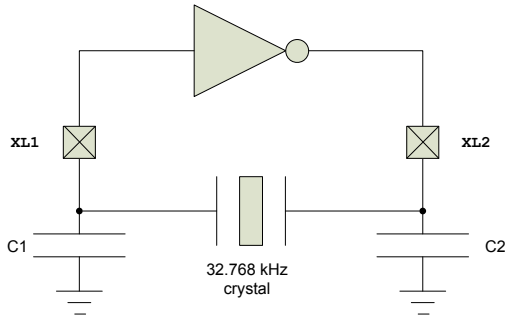

Figure 19: Circuit diagram of the 32.768 kHz crystal oscillator

The load capacitance (CL) is the total capacitance seen by the crystal across its terminals and is given by:

$$CL = \frac{(C1' \cdot C2')}{(C1' + C2')}$$

$$C1' = C1 + C_{pcb1} + C_{pin}$$
$$C2' = C2 + C_{pcb2} + C_{pin}$$

C1 and C2 are ceramic SMD capacitors connected between each crystal terminal and ground. For more information, see *Reference circuitry* on page 539. C_{pcb1} and C_{pcb2} are stray capacitances on the PCB. C_{pin} is the pin input capacitance on the XC1 and XC2 pins. The load capacitors C1 and C2 should have the same value.

19.2.5 32.768 kHz synthesized from HFCLK (LFSYNT)

LFCLK can also be synthesized from the HFCLK clock source. The accuracy of LFCLK will then be the accuracy of the HFCLK.

Using the LFSYNT clock avoids the requirement for a 32.768 kHz crystal, but increases average power consumption as the HFCLK will need to be requested in the system.

19.3 Registers

Table 21: Instances

Base address	Peripheral	Instance	Description	Configuration
0x40000000	CLOCK	CLOCK	Clock control	

Table 22: Register Overview

Register	Offset	Description
TASKS_HFCLKSTART	0x000	Start HFCLK crystal oscillator
TASKS_HFCLKSTOP	0x004	Stop HFCLK crystal oscillator
TASKS_LFCLKSTART	0x008	Start LFCLK source
TASKS_LFCLKSTOP	0x00C	Stop LFCLK source
TASKS_CAL	0x010	Start calibration of LFRC oscillator
TASKS_CTSTART	0x014	Start calibration timer
TASKS_CTSTOP	0x018	Stop calibration timer
EVENTS_HFCLKSTARTED	0x100	HFCLK oscillator started
EVENTS_LFCLKSTARTED	0x104	LFCLK started
EVENTS_DONE	0x10C	Calibration of LFCLK RC oscillator complete event
EVENTS_CTTO	0x110	Calibration timer timeout
INTENSET	0x304	Enable interrupt
INTENCLR	0x308	Disable interrupt
HFCLKRUN	0x408	Status indicating that HFCLKSTART task has been triggered
HFCLKSTAT	0x40C	HFCLK status
LFCLKRUN	0x414	Status indicating that LFCLKSTART task has been triggered
LFCLKSTAT	0x418	LFCLK status
LFCLKSRCCOPY	0x41C	Copy of LFCLKSRC register, set when LFCLKSTART task was triggered
LFCLKSRC	0x518	Clock source for the LFCLK
CTIV	0x538	Calibration timer interval (retained register, same reset behaviour as RESETREAS)
TRACECONFIG	0x55C	Clocking options for the Trace Port debug interface

19.3.1 INTENSET

Address offset: 0x304

Enable interrupt

Bit number	31	30	29	28	27	26	25	24	23	22	21	20	19	18	17	16	15	14	13	12	11	10	9	8	7	6	5	4	3	2	1	0
Id																												D	C		B	A
Reset 0x00000000	**0**	**0**	**0**	**0**	**0**	**0**	**0**	**0**	**0**	**0**	**0**	**0**	**0**	**0**	**0**	**0**	**0**	**0**	**0**	**0**	**0**	**0**	**0**	**0**	**0**	**0**	**0**	**0**	**0**	**0**	**0**	**0**

Id	RW	Field	Value Id	Value	Description
A	RW	HFCLKSTARTED			Write '1' to Enable interrupt for HFCLKSTARTED event See *EVENTS_HFCLKSTARTED*
			Set	1	Enable
			Disabled	0	Read: Disabled
			Enabled	1	Read: Enabled
B	RW	LFCLKSTARTED			Write '1' to Enable interrupt for LFCLKSTARTED event See *EVENTS_LFCLKSTARTED*
			Set	1	Enable
			Disabled	0	Read: Disabled
			Enabled	1	Read: Enabled
C	RW	DONE			Write '1' to Enable interrupt for DONE event See *EVENTS_DONE*
			Set	1	Enable
			Disabled	0	Read: Disabled
			Enabled	1	Read: Enabled
D	RW	CTTO			Write '1' to Enable interrupt for CTTO event See *EVENTS_CTTO*
			Set	1	Enable
			Disabled	0	Read: Disabled
			Enabled	1	Read: Enabled

19.3.2 INTENCLR

Address offset: 0x308

Disable interrupt

Bit number	31	30	29	28	27	26	25	24	23	22	21	20	19	18	17	16	15	14	13	12	11	10	9	8	7	6	5	4	3	2	1	0
Id																												D	C		B	A
Reset 0x00000000	**0**	**0**	**0**	**0**	**0**	**0**	**0**	**0**	**0**	**0**	**0**	**0**	**0**	**0**	**0**	**0**	**0**	**0**	**0**	**0**	**0**	**0**	**0**	**0**	**0**	**0**	**0**	**0**	**0**	**0**	**0**	**0**

Id	RW	Field	Value Id	Value	Description
A	RW	HFCLKSTARTED			Write '1' to Disable interrupt for HFCLKSTARTED event See *EVENTS_HFCLKSTARTED*
			Clear	1	Disable
			Disabled	0	Read: Disabled
			Enabled	1	Read: Enabled
B	RW	LFCLKSTARTED			Write '1' to Disable interrupt for LFCLKSTARTED event See *EVENTS_LFCLKSTARTED*
			Clear	1	Disable
			Disabled	0	Read: Disabled
			Enabled	1	Read: Enabled
C	RW	DONE			Write '1' to Disable interrupt for DONE event See *EVENTS_DONE*
			Clear	1	Disable
			Disabled	0	Read: Disabled
			Enabled	1	Read: Enabled
D	RW	CTTO			Write '1' to Disable interrupt for CTTO event See *EVENTS_CTTO*
			Clear	1	Disable
			Disabled	0	Read: Disabled
			Enabled	1	Read: Enabled

19.3.3 HFCLKRUN

Address offset: 0x408

Status indicating that HFCLKSTART task has been triggered

Bit number	31	30	29	28	27	26	25	24	23	22	21	20	19	18	17	16	15	14	13	12	11	10	9	8	7	6	5	4	3	2	1	0
Id																																A
Reset 0x00000000	**0**	**0**	**0**	**0**	**0**	**0**	**0**	**0**	**0**	**0**	**0**	**0**	**0**	**0**	**0**	**0**	**0**	**0**	**0**	**0**	**0**	**0**	**0**	**0**	**0**	**0**	**0**	**0**	**0**	**0**	**0**	**0**

Id	RW	Field	Value Id	Value	Description
A	R	STATUS			HFCLKSTART task triggered or not
			NotTriggered	0	Task not triggered
			Triggered	1	Task triggered

19.3.4 HFCLKSTAT

Address offset: 0x40C

HFCLK status

Bit number	31	30	29	28	27	26	25	24	23	22	21	20	19	18	17	16	15	14	13	12	11	10	9	8	7	6	5	4	3	2	1	0
Id																B																A
Reset 0x00000000	**0**	**0**	**0**	**0**	**0**	**0**	**0**	**0**	**0**	**0**	**0**	**0**	**0**	**0**	**0**	**0**	**0**	**0**	**0**	**0**	**0**	**0**	**0**	**0**	**0**	**0**	**0**	**0**	**0**	**0**	**0**	**0**

Id	RW	Field	Value Id	Value	Description
A	R	SRC			Source of HFCLK
			RC	0	64 MHz internal oscillator (HFINT)
			Xtal	1	64 MHz crystal oscillator (HFXO)
B	R	STATE			HFCLK state
			NotRunning	0	HFCLK not running
			Running	1	HFCLK running

19.3.5 LFCLKRUN

Address offset: 0x414

Status indicating that LFCLKSTART task has been triggered

Bit number	31	30	29	28	27	26	25	24	23	22	21	20	19	18	17	16	15	14	13	12	11	10	9	8	7	6	5	4	3	2	1	0
Id																																A
Reset 0x00000000	**0**	**0**	**0**	**0**	**0**	**0**	**0**	**0**	**0**	**0**	**0**	**0**	**0**	**0**	**0**	**0**	**0**	**0**	**0**	**0**	**0**	**0**	**0**	**0**	**0**	**0**	**0**	**0**	**0**	**0**	**0**	**0**

Id	RW	Field	Value Id	Value	Description
A	R	STATUS			LFCLKSTART task triggered or not
			NotTriggered	0	Task not triggered
			Triggered	1	Task triggered

19.3.6 LFCLKSTAT

Address offset: 0x418

LFCLK status

Bit number	31	30	29	28	27	26	25	24	23	22	21	20	19	18	17	16	15	14	13	12	11	10	9	8	7	6	5	4	3	2	1	0
Id																B															A	A
Reset 0x00000000	**0**	**0**	**0**	**0**	**0**	**0**	**0**	**0**	**0**	**0**	**0**	**0**	**0**	**0**	**0**	**0**	**0**	**0**	**0**	**0**	**0**	**0**	**0**	**0**	**0**	**0**	**0**	**0**	**0**	**0**	**0**	**0**

Id	RW	Field	Value Id	Value	Description
A	R	SRC			Source of LFCLK
			RC	0	32.768 kHz RC oscillator
			Xtal	1	32.768 kHz crystal oscillator
			Synth	2	32.768 kHz synthesized from HFCLK
B	R	STATE			LFCLK state
			NotRunning	0	LFCLK not running
			Running	1	LFCLK running

19.3.7 LFCLKSRCCOPY

Address offset: 0x41C

Copy of LFCLKSRC register, set when LFCLKSTART task was triggered

Bit number	31	30	29	28	27	26	25	24	23	22	21	20	19	18	17	16	15	14	13	12	11	10	9	8	7	6	5	4	3	2	1	0
Id																															A	A
Reset 0x00000000	**0**	**0**	**0**	**0**	**0**	**0**	**0**	**0**	**0**	**0**	**0**	**0**	**0**	**0**	**0**	**0**	**0**	**0**	**0**	**0**	**0**	**0**	**0**	**0**	**0**	**0**	**0**	**0**	**0**	**0**	**0**	**0**

Id	RW	Field	Value Id	Value	Description
A	R	SRC			Clock source
			RC	0	32.768 kHz RC oscillator
			Xtal	1	32.768 kHz crystal oscillator
			Synth	2	32.768 kHz synthesized from HFCLK

19.3.8 LFCLKSRC

Address offset: 0x518

Clock source for the LFCLK

Bit number	31	30	29	28	27	26	25	24	23	22	21	20	19	18	17	16	15	14	13	12	11	10	9	8	7	6	5	4	3	2	1	0
Id																															A	A
Reset 0x00000000	**0**	**0**	**0**	**0**	**0**	**0**	**0**	**0**	**0**	**0**	**0**	**0**	**0**	**0**	**0**	**0**	**0**	**0**	**0**	**0**	**0**	**0**	**0**	**0**	**0**	**0**	**0**	**0**	**0**	**0**	**0**	**0**

Id	RW	Field	Value Id	Value	Description
A	RW	SRC			Clock source
			RC	0	32.768 kHz RC oscillator
			Xtal	1	32.768 kHz crystal oscillator
			Synth	2	32.768 kHz synthesized from HFCLK

19.3.9 CTIV

Address offset: 0x538

Calibration timer interval

(retained register, same reset behaviour as RESETREAS)

Bit number	31	30	29	28	27	26	25	24	23	22	21	20	19	18	17	16	15	14	13	12	11	10	9	8	7	6	5	4	3	2	1	0
Id																										A	A	A	A	A	A	A
Reset 0x00000000	**0**	**0**	**0**	**0**	**0**	**0**	**0**	**0**	**0**	**0**	**0**	**0**	**0**	**0**	**0**	**0**	**0**	**0**	**0**	**0**	**0**	**0**	**0**	**0**	**0**	**0**	**0**	**0**	**0**	**0**	**0**	**0**

Id	RW	Field	Value Id	Value	Description
A	RW	CTIV			Calibration timer interval in multiple of 0.25 seconds. Range: 0.25 seconds to 31.75 seconds.

19.3.10 TRACECONFIG

Address offset: 0x55C

Clocking options for the Trace Port debug interface

This register is a retained register. Reset behavior is the same as debug components.

Bit number	31	30	29	28	27	26	25	24	23	22	21	20	19	18	17	16	15	14	13	12	11	10	9	8	7	6	5	4	3	2	1	0
Id															B	B															A	A
Reset 0x00000000	**0**	**0**	**0**	**0**	**0**	**0**	**0**	**0**	**0**	**0**	**0**	**0**	**0**	**0**	**0**	**0**	**0**	**0**	**0**	**0**	**0**	**0**	**0**	**0**	**0**	**0**	**0**	**0**	**0**	**0**	**0**	**0**

Id	RW	Field	Value Id	Value	Description
A	RW	TRACEPORTSPEED			Speed of Trace Port clock. Note that the TRACECLK pin will output this clock divided by two.
			32MHz	0	32 MHz Trace Port clock (TRACECLK = 16 MHz)
			16MHz	1	16 MHz Trace Port clock (TRACECLK = 8 MHz)
			8MHz	2	8 MHz Trace Port clock (TRACECLK = 4 MHz)
			4MHz	3	4 MHz Trace Port clock (TRACECLK = 2 MHz)
B	RW	TRACEMUX			Pin multiplexing of trace signals.
			GPIO	0	GPIOs multiplexed onto all trace-pins
			Serial	1	SWO multiplexed onto P0.18, GPIO multiplexed onto other trace pins
			Parallel	2	TRACECLK and TRACEDATA multiplexed onto P0.20, P0.18, P0.16, P0.15 and P0.14.

19.4 Electrical Specification

19.4.1 64 MHz internal oscillator (HFINT)

Symbol	Description	Min.	Typ.	Max.	Units
f_{NOM_HFINT}	Nominal output frequency		64		MHz
f_{TOL_HFINT}	Frequency tolerance		<±1.5	<±6	%
I_{HFINT}	Run current		60		µA
I_{START_HFINT}	Average startup current		I_HFINT		µA
t_{START_HFINT}	Startup time		3		us

19.4.2 64 MHz crystal oscillator (HFXO)

Symbol	Description	Min.	Typ.	Max.	Units
f_{NOM_HFXO}	Nominal output frequency		64		MHz
f_{XTAL_HFXO}	External crystal frequency		32		MHz
f_{TOL_HFXO}	Frequency tolerance requirement for 2.4 GHz proprietary radio applications			±60	ppm
$f_{TOL\_HFXO\_BLE}$	Frequency tolerance requirement, Bluetooth low energy applications			±40	ppm

Symbol	Description	Min.	Typ.	Max.	Units
C_{L_HFXO}	Load capacitance			12	pF
C_{0_HFXO}	Shunt capacitance			7	pF
$R_{S\_HFXO\_7PF}$	Equivalent series resistance C0 = 7 pF			60	ohm
$R_{S\_HFXO\_5PF}$	Equivalent series resistance C0 = 5 pF			80	ohm
$R_{S\_HFXO\_3PF}$	Equivalent series resistance C0 = 3 pF			100	ohm
P_{D_HFXO}	Drive level			100	uW
C_{PIN_HFXO}	Input capacitance XC1 and XC2		4		pF
I_{STBY_X32M}	Core standby current[11]		50		µA
I_{HFXO}	Run current		250		µA
I_{START_HFXO}	Average startup current, first 1 ms		0.4		mA
t_{START_HFXO}	Startup time		0.36		ms

19.4.3 Low frequency crystal oscillator (LFXO)

Symbol	Description	Min.	Typ.	Max.	Units
f_{NOM_LFXO}	Crystal frequency		32.768		kHz
$f_{TOL\_LFXO\_BLE}$	Frequency tolerance requirement for BLE stack			±250[12]	ppm
$f_{TOL\_LFXO\_ANT}$	Frequency tolerance requirement for ANT stack			±50	ppm
C_{L_LFXO}	Load capacitance			12.5	pF
C_{0_LFXO}	Shunt capacitance			2	pF
R_{S_LFXO}	Equivalent series resistance			100	kohm
P_{D_LFXO}	Drive level			1	uW
C_{pin}	Input capacitance on XL1 and XL2 pads		4		pF
I_{LFXO}	Run current for 32.768 kHz crystal oscillator		0.25		µA
t_{START_LFXO}	Startup time for 32.768 kHz crystal oscillator		0.25		s

19.4.4 Low frequency RC oscillator (LFRC)

Symbol	Description	Min.	Typ.	Max.	Units
f_{NOM_LFRC}	Nominal frequency		32.768		kHz
f_{TOL_LFRC}	Frequency tolerance			±2	%
$f_{TOL\_CAL\_LFRC}$	Frequency tolerance for LFRC after calibration[13]			±250	ppm
I_{LFRC}	Run current for 32.768 kHz RC oscillator		0.6	1	µA
t_{START_LFRC}	Startup time for 32.768 kHz RC oscillator		600		us

19.4.5 Synthesized low frequency clock (LFSYNT)

Symbol	Description	Min.	Typ.	Max.	Units
f_{NOM_LFSYNT}	Nominal frequency		32.768		kHz
f_{TOL_LFSYNT}	Frequency tolerance in addition to HFLCK tolerance[14]		8		ppm
I_{LFSYNT}	Run current for synthesized 32.768 kHz		100		µA
t_{START_LFSYNT}	Startup time for synthesized 32.768 kHz		100		us

11 Current drawn if HFXO is forced on through for instance using the low latency power mode.
12 Value valid for calibration intervals ≤8 s and temperature variation within ±0.5°C. Decrease calibration interval as needed to keep temperature variation within ±0.5°C between calibrations.
13 Constant temperature within ±0.5 °C and calibration performed at least every 8 seconds
14 Frequency tolerance will be derived from the HFCLK source clock plus the LFSYNT tolerance

20 GPIO — General purpose input/output

The general purpose input/output (GPIO) is organized as one port with up to 32 I/Os (dependent on package) enabling access and control of up to 32 pins through one port. Each GPIO can be accessed individually.

GPIO has the following user-configurable features:

- Up to 32 GPIO
- 8 GPIO with Analog channels for SAADC, COMP or LPCOMP inputs
- Configurable output drive strength
- Internal pull-up and pull-down resistors
- Wake-up from high or low level triggers on all pins
- Trigger interrupt on state changes on any pin
- All pins can be used by the PPI task/event system
- One or more GPIO outputs can be controlled through PPI and GPIOTE channels
- All pins can be individually mapped to interface blocks for layout flexibility
- GPIO state changes captured on SENSE signal can be stored by LATCH register

The GPIO Port peripheral implements up to 32 pins, `PIN0` through `PIN31`. Each of these pins can be individually configured in the PIN_CNF[n] registers (n=0..31).

The following parameters can be configured through these registers:

- Direction
- Drive strength
- Enabling of pull-up and pull-down resistors
- Pin sensing
- Input buffer disconnect
- Analog input (for selected pins)

The PIN_CNF registers are retained registers. See *POWER* chapter for more information about retained registers.

20.1 Pin configuration

Pins can be individually configured, through the SENSE field in the PIN_CNF[n] register, to detect either a high level or a low level on their input.

When the correct level is detected on any such configured pin, the sense mechanism will set the DETECT signal high. Each pin has a separate DETECT signal, and the default behaviour, as defined by the DETECTMODE register, is that the DETECT signal from all pins in the GPIO Port are combined into a common DETECT signal that is routed throughout the system, which then can be utilized by other peripherals, see *Figure 20: GPIO Port and the GPIO pin details* on page 108. This mechanism is functional in both ON and OFF mode.

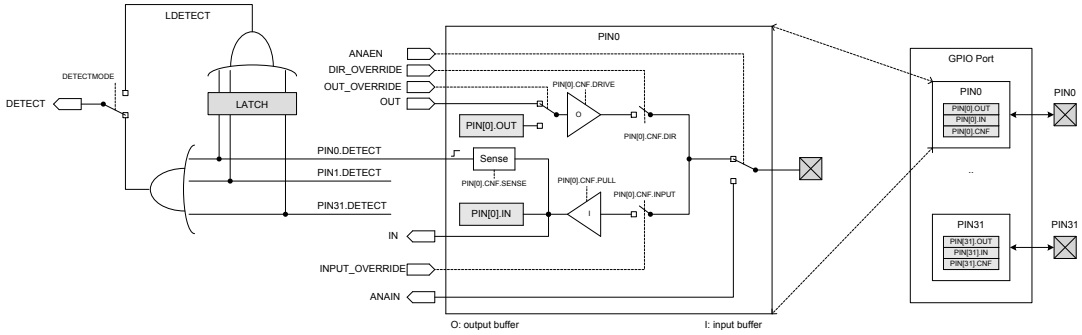

Figure 20: GPIO Port and the GPIO pin details

Figure 20: GPIO Port and the GPIO pin details on page 108 illustrates the GPIO port containing 32 individual pins, where `PIN0` is illustrated in more detail as a reference. All the signals on the left side of the illustration are used by other peripherals in the system, and therefore, are not directly available to the CPU.

Make sure that a pin is in a level that cannot trigger the sense mechanism before enabling it. Detect will go high immediately if the sense condition configured in the PIN_CNF registers is met when the sense mechanism is enabled. This will trigger a PORT event if the DETECT signal was low before enabling the sense mechanism. See *GPIOTE — GPIO tasks and events* on page 154.

See the following peripherals for more information about how the DETECT signal is used:

- POWER: uses the DETECT signal to exit from System OFF.
- GPIOTE: uses the DETECT signal to generate the PORT event.

When a pin's PINx.DETECT signal goes high, a flag will be set in the LATCH register, e.g. when the PIN0.DETECT signal goes high, bit 0 in the LATCH register will be set to '1'.

The LATCH register will only be cleared if the CPU explicitly clears it by writing a '1' to the bit that shall be cleared, i.e. the LATCH register will not be affected by a PINx.DETECT signal being set low.

If the CPU performs a clear operation on a bit in the LATCH register when the associated PINx.DETECT signal is high, the bit in the LATCH register will not be cleared.

The LDETECT signal will be set high when one or more bits in the LATCH register are '1'. The LDETECT signal will be set low when all bits in the LATCH register are successfully cleared to '0'.

If one or more bits in the LATCH register are '1' after the CPU has performed a clear operation on the LATCH registers, a rising edge will be generated on the LDETECT signal, this is illustrated in *Figure 21: DETECT signal behavior* on page 109.

> **Important:** The CPU can read the LATCH register at any time to check if a SENSE condition has been met on one or more of the the GPIO pins even if that condition is no longer met at the time the CPU queries the LATCH register. This mechanism will work even if the LDETECT signal is not used as the DETECT signal.

The LDETECT signal is by default not connected to the GPIO port's DETECT signal, but via the DETECTMODE register it is possible to change the behaviour of the GPIO port's DETECT signal from the default behaviour described above to instead be derived directly from the LDETECT signal, see *Figure 20: GPIO Port and the GPIO pin details* on page 108. *Figure 21: DETECT signal behavior* on page 109 illustrates the DETECT signals behaviour for these two alternatives.

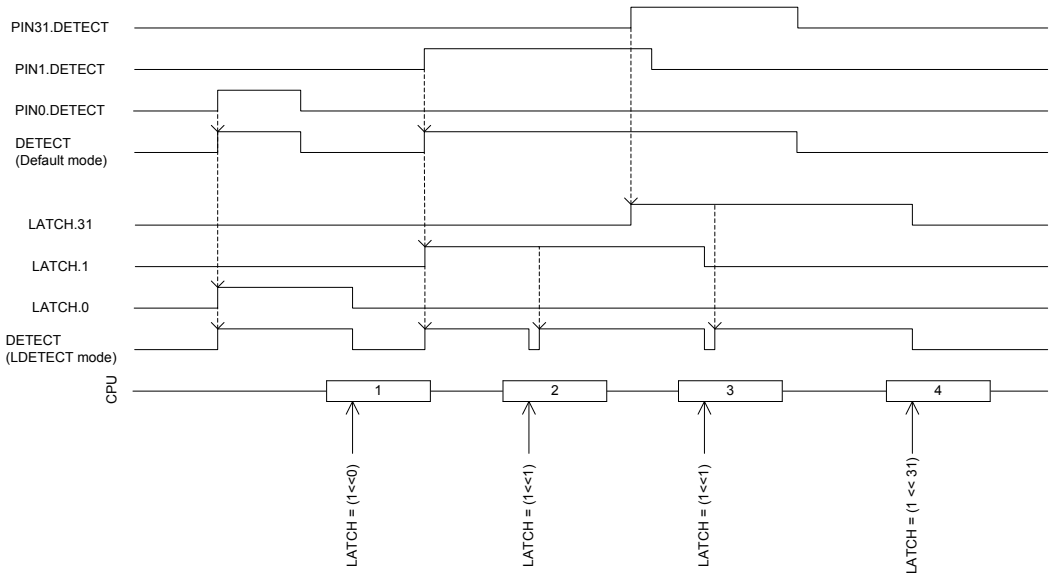

Figure 21: DETECT signal behavior

The input buffer of a GPIO pin can be disconnected from the pin to enable power savings when the pin is not used as an input, see *Figure 20: GPIO Port and the GPIO pin details* on page 108. Inputs must be connected in order to get a valid input value in the IN register and for the sense mechanism to get access to the pin.

Other peripherals in the system can attach themselves to GPIO pins and override their output value and configuration, or read their analog or digital input value, see *Figure 20: GPIO Port and the GPIO pin details* on page 108.

Selected pins also support analog input signals, see ANAIN in *Figure 20: GPIO Port and the GPIO pin details* on page 108. The assignment of the analog pins can be found in *Pin assignments*.

> **Important:** When a pin is configured as digital input, care has been taken in the nRF52 design to minimize increased current consumption when the input voltage is between V_{IL} and V_{IH}. However, it is a good practice to ensure that the external circuitry does not drive that pin to levels between V_{IL} and V_{IH} for a long period of time.

20.2 Notes on usage and restrictions

20.2.1 GPIO located near the radio

Radio performance parameters, such as sensitivity, may be affected by high frequency digital I/O with large sink/source current close to the Radio power supply and antenna pins.

Table 23: GPIO recommended usage on page 109 identifies some GPIO that have recommended usage guidelines to maximize radio performance in an application.

Table 23: GPIO recommended usage

Pin	GPIO	Recommended usage
27	P0.22	Low drive, low frequency I/O only.
28	P0.23	
29	P0.24	
37	P0.25	
38	P0.26	
39	P0.27	
40	P0.28	
41	P0.29	
42	P0.30	

Pin	GPIO	Recommended usage
43	P0.31	

20.2.2 NFC antenna pins

Two physical pins can be configured either as NFC antenna pins (factory default), or as GPIOs `P0.09` and `P0.10`.

When configured as NFC antenna pins, the GPIOs on those pins will automatically be set to DISABLE state and a protection circuit will be enabled preventing the chip from being damaged in the presence of a strong NFC field. The protection circuit will short the two pins together if voltage difference exceeds approximately 2 V.

For information on how to configure these pins as normal GPIOs, see *NFCT* and *UICR* chapters. Note that the device will not be protected against strong NFC field damage if the pins are configured as GPIO and an NFC antenna is connected to the device. The pins will always be configured as NFC pins during power-on reset until the configuration is set according to the UICR register.

These two pins will have some limitations when configured as GPIO. The pin capacitance will be higher on these pins, and there is some current leakage between the two pins if they are driven to different logical values. To avoid leakage between the pins when configured as GPIO, these GPIOs should always be at the same logical value whenever entering one of the device power saving modes. See *Electrical specification*.

20.3 Registers

Table 24: Instances

Base address	Peripheral	Instance	Description	Configuration
0x50000000	GPIO	GPIO	General purpose input and output	Deprecated
0x50000000	GPIO	P0	General purpose input and output	

Table 25: Register Overview

Register	Offset	Description
OUT	0x504	Write GPIO port
OUTSET	0x508	Set individual bits in GPIO port
OUTCLR	0x50C	Clear individual bits in GPIO port
IN	0x510	Read GPIO port
DIR	0x514	Direction of GPIO pins
DIRSET	0x518	DIR set register
DIRCLR	0x51C	DIR clear register
LATCH	0x520	Latch register indicating what GPIO pins that have met the criteria set in the PIN_CNF[n].SENSE registers
DETECTMODE	0x524	Select between default DETECT signal behaviour and LDETECT mode
PIN_CNF[0]	0x700	Configuration of GPIO pins
PIN_CNF[1]	0x704	Configuration of GPIO pins
PIN_CNF[2]	0x708	Configuration of GPIO pins
PIN_CNF[3]	0x70C	Configuration of GPIO pins
PIN_CNF[4]	0x710	Configuration of GPIO pins
PIN_CNF[5]	0x714	Configuration of GPIO pins
PIN_CNF[6]	0x718	Configuration of GPIO pins
PIN_CNF[7]	0x71C	Configuration of GPIO pins
PIN_CNF[8]	0x720	Configuration of GPIO pins
PIN_CNF[9]	0x724	Configuration of GPIO pins
PIN_CNF[10]	0x728	Configuration of GPIO pins
PIN_CNF[11]	0x72C	Configuration of GPIO pins
PIN_CNF[12]	0x730	Configuration of GPIO pins
PIN_CNF[13]	0x734	Configuration of GPIO pins
PIN_CNF[14]	0x738	Configuration of GPIO pins
PIN_CNF[15]	0x73C	Configuration of GPIO pins
PIN_CNF[16]	0x740	Configuration of GPIO pins

Register	Offset	Description
PIN_CNF[17]	0x744	Configuration of GPIO pins
PIN_CNF[18]	0x748	Configuration of GPIO pins
PIN_CNF[19]	0x74C	Configuration of GPIO pins
PIN_CNF[20]	0x750	Configuration of GPIO pins
PIN_CNF[21]	0x754	Configuration of GPIO pins
PIN_CNF[22]	0x758	Configuration of GPIO pins
PIN_CNF[23]	0x75C	Configuration of GPIO pins
PIN_CNF[24]	0x760	Configuration of GPIO pins
PIN_CNF[25]	0x764	Configuration of GPIO pins
PIN_CNF[26]	0x768	Configuration of GPIO pins
PIN_CNF[27]	0x76C	Configuration of GPIO pins
PIN_CNF[28]	0x770	Configuration of GPIO pins
PIN_CNF[29]	0x774	Configuration of GPIO pins
PIN_CNF[30]	0x778	Configuration of GPIO pins
PIN_CNF[31]	0x77C	Configuration of GPIO pins

20.3.1 OUT

Address offset: 0x504

Write GPIO port

Bit number				31	30	29	28	27	26	25	24	23	22	21	20	19	18	17	16	15	14	13	12	11	10	9	8	7	6	5	4	3	2	1	0
Id				f	e	d	c	b	a	Z	Y	X	W	V	U	T	S	R	Q	P	O	N	M	L	K	J	I	H	G	F	E	D	C	B	A
Reset 0x00000000				**0**	**0**	**0**	**0**	**0**	**0**	**0**	**0**	**0**	**0**	**0**	**0**	**0**	**0**	**0**	**0**	**0**	**0**	**0**	**0**	**0**	**0**	**0**	**0**	**0**	**0**	**0**	**0**	**0**	**0**	**0**	**0**
Id	**RW**	**Field**	**Value Id**	**Value**								**Description**																							
A	RW	PIN0										P0.0 pin																							
			Low	0								Pin driver is low																							
			High	1								Pin driver is high																							
B	RW	PIN1										P0.1 pin																							
			Low	0								Pin driver is low																							
			High	1								Pin driver is high																							
C	RW	PIN2										P0.2 pin																							
			Low	0								Pin driver is low																							
			High	1								Pin driver is high																							
D	RW	PIN3										P0.3 pin																							
			Low	0								Pin driver is low																							
			High	1								Pin driver is high																							
E	RW	PIN4										P0.4 pin																							
			Low	0								Pin driver is low																							
			High	1								Pin driver is high																							
F	RW	PIN5										P0.5 pin																							
			Low	0								Pin driver is low																							
			High	1								Pin driver is high																							
G	RW	PIN6										P0.6 pin																							
			Low	0								Pin driver is low																							
			High	1								Pin driver is high																							
H	RW	PIN7										P0.7 pin																							
			Low	0								Pin driver is low																							
			High	1								Pin driver is high																							
I	RW	PIN8										P0.8 pin																							
			Low	0								Pin driver is low																							
			High	1								Pin driver is high																							
J	RW	PIN9										P0.9 pin																							
			Low	0								Pin driver is low																							
			High	1								Pin driver is high																							
K	RW	PIN10										P0.10 pin																							
			Low	0								Pin driver is low																							
			High	1								Pin driver is high																							

Bit number				31	30	29	28	27	26	25	24	23	22	21	20	19	18	17	16	15	14	13	12	11	10	9	8	7	6	5	4	3	2	1	0
Id				f	e	d	c	b	a	Z	Y	X	W	V	U	T	S	R	Q	P	O	N	M	L	K	J	I	H	G	F	E	D	C	B	A
Reset 0x00000000				**0**	**0**	**0**	**0**	**0**	**0**	**0**	**0**	**0**	**0**	**0**	**0**	**0**	**0**	**0**	**0**	**0**	**0**	**0**	**0**	**0**	**0**	**0**	**0**	**0**	**0**	**0**	**0**	**0**	**0**	**0**	**0**
Id	**RW**	**Field**	**Value Id**	**Value**								**Description**																							
L	RW	PIN11										P0.11 pin																							
			Low	0								Pin driver is low																							
			High	1								Pin driver is high																							
M	RW	PIN12										P0.12 pin																							
			Low	0								Pin driver is low																							
			High	1								Pin driver is high																							
N	RW	PIN13										P0.13 pin																							
			Low	0								Pin driver is low																							
			High	1								Pin driver is high																							
O	RW	PIN14										P0.14 pin																							
			Low	0								Pin driver is low																							
			High	1								Pin driver is high																							
P	RW	PIN15										P0.15 pin																							
			Low	0								Pin driver is low																							
			High	1								Pin driver is high																							
Q	RW	PIN16										P0.16 pin																							
			Low	0								Pin driver is low																							
			High	1								Pin driver is high																							
R	RW	PIN17										P0.17 pin																							
			Low	0								Pin driver is low																							
			High	1								Pin driver is high																							
S	RW	PIN18										P0.18 pin																							
			Low	0								Pin driver is low																							
			High	1								Pin driver is high																							
T	RW	PIN19										P0.19 pin																							
			Low	0								Pin driver is low																							
			High	1								Pin driver is high																							
U	RW	PIN20										P0.20 pin																							
			Low	0								Pin driver is low																							
			High	1								Pin driver is high																							
V	RW	PIN21										P0.21 pin																							
			Low	0								Pin driver is low																							
			High	1								Pin driver is high																							
W	RW	PIN22										P0.22 pin																							
			Low	0								Pin driver is low																							
			High	1								Pin driver is high																							
X	RW	PIN23										P0.23 pin																							
			Low	0								Pin driver is low																							
			High	1								Pin driver is high																							
Y	RW	PIN24										P0.24 pin																							
			Low	0								Pin driver is low																							
			High	1								Pin driver is high																							
Z	RW	PIN25										P0.25 pin																							
			Low	0								Pin driver is low																							
			High	1								Pin driver is high																							
a	RW	PIN26										P0.26 pin																							
			Low	0								Pin driver is low																							
			High	1								Pin driver is high																							
b	RW	PIN27										P0.27 pin																							
			Low	0								Pin driver is low																							
			High	1								Pin driver is high																							
c	RW	PIN28										P0.28 pin																							
			Low	0								Pin driver is low																							
			High	1								Pin driver is high																							
d	RW	PIN29										P0.29 pin																							

Bit number				31	30	29	28	27	26	25	24	23	22	21	20	19	18	17	16	15	14	13	12	11	10	9	8	7	6	5	4	3	2	1	0
Id				f	e	d	c	b	a	Z	Y	X	W	V	U	T	S	R	Q	P	O	N	M	L	K	J	I	H	G	F	E	D	C	B	A
Reset 0x00000000				**0**	**0**	**0**	**0**	**0**	**0**	**0**	**0**	**0**	**0**	**0**	**0**	**0**	**0**	**0**	**0**	**0**	**0**	**0**	**0**	**0**	**0**	**0**	**0**	**0**	**0**	**0**	**0**	**0**	**0**	**0**	**0**
Id	**RW**	**Field**	**Value Id**	**Value**								**Description**																							
			Low	0								Pin driver is low																							
			High	1								Pin driver is high																							
e	RW	PIN30										P0.30 pin																							
			Low	0								Pin driver is low																							
			High	1								Pin driver is high																							
f	RW	PIN31										P0.31 pin																							
			Low	0								Pin driver is low																							
			High	1								Pin driver is high																							

20.3.2 OUTSET

Address offset: 0x508

Set individual bits in GPIO port

Read: reads value of OUT register.

Bit number				31	30	29	28	27	26	25	24	23	22	21	20	19	18	17	16	15	14	13	12	11	10	9	8	7	6	5	4	3	2	1	0
Id				f	e	d	c	b	a	Z	Y	X	W	V	U	T	S	R	Q	P	O	N	M	L	K	J	I	H	G	F	E	D	C	B	A
Reset 0x00000000				**0**	**0**	**0**	**0**	**0**	**0**	**0**	**0**	**0**	**0**	**0**	**0**	**0**	**0**	**0**	**0**	**0**	**0**	**0**	**0**	**0**	**0**	**0**	**0**	**0**	**0**	**0**	**0**	**0**	**0**	**0**	**0**
Id	**RW**	**Field**	**Value Id**	**Value**								**Description**																							
A	RW	PIN0										P0.0 pin																							
			Low	0								Read: pin driver is low																							
			High	1								Read: pin driver is high																							
			Set	1								Write: writing a '1' sets the pin high; writing a '0' has no effect																							
B	RW	PIN1										P0.1 pin																							
			Low	0								Read: pin driver is low																							
			High	1								Read: pin driver is high																							
			Set	1								Write: writing a '1' sets the pin high; writing a '0' has no effect																							
C	RW	PIN2										P0.2 pin																							
			Low	0								Read: pin driver is low																							
			High	1								Read: pin driver is high																							
			Set	1								Write: writing a '1' sets the pin high; writing a '0' has no effect																							
D	RW	PIN3										P0.3 pin																							
			Low	0								Read: pin driver is low																							
			High	1								Read: pin driver is high																							
			Set	1								Write: writing a '1' sets the pin high; writing a '0' has no effect																							
E	RW	PIN4										P0.4 pin																							
			Low	0								Read: pin driver is low																							
			High	1								Read: pin driver is high																							
			Set	1								Write: writing a '1' sets the pin high; writing a '0' has no effect																							
F	RW	PIN5										P0.5 pin																							
			Low	0								Read: pin driver is low																							
			High	1								Read: pin driver is high																							
			Set	1								Write: writing a '1' sets the pin high; writing a '0' has no effect																							
G	RW	PIN6										P0.6 pin																							
			Low	0								Read: pin driver is low																							
			High	1								Read: pin driver is high																							
			Set	1								Write: writing a '1' sets the pin high; writing a '0' has no effect																							
H	RW	PIN7										P0.7 pin																							
			Low	0								Read: pin driver is low																							
			High	1								Read: pin driver is high																							
			Set	1								Write: writing a '1' sets the pin high; writing a '0' has no effect																							
I	RW	PIN8										P0.8 pin																							
			Low	0								Read: pin driver is low																							
			High	1								Read: pin driver is high																							

Bit number				31	30	29	28	27	26	25	24	23	22	21	20	19	18	17	16	15	14	13	12	11	10	9	8	7	6	5	4	3	2	1	0
Id				f	e	d	c	b	a	Z	Y	X	W	V	U	T	S	R	Q	P	O	N	M	L	K	J	I	H	G	F	E	D	C	B	A
Reset 0x00000000				**0**	**0**	**0**	**0**	**0**	**0**	**0**	**0**	**0**	**0**	**0**	**0**	**0**	**0**	**0**	**0**	**0**	**0**	**0**	**0**	**0**	**0**	**0**	**0**	**0**	**0**	**0**	**0**	**0**	**0**	**0**	**0**
Id	**RW**	**Field**	**Value Id**	**Value**								**Description**																							
			Set	1								Write: writing a '1' sets the pin high; writing a '0' has no effect																							
J	RW	PIN9										P0.9 pin																							
			Low	0								Read: pin driver is low																							
			High	1								Read: pin driver is high																							
			Set	1								Write: writing a '1' sets the pin high; writing a '0' has no effect																							
K	RW	PIN10										P0.10 pin																							
			Low	0								Read: pin driver is low																							
			High	1								Read: pin driver is high																							
			Set	1								Write: writing a '1' sets the pin high; writing a '0' has no effect																							
L	RW	PIN11										P0.11 pin																							
			Low	0								Read: pin driver is low																							
			High	1								Read: pin driver is high																							
			Set	1								Write: writing a '1' sets the pin high; writing a '0' has no effect																							
M	RW	PIN12										P0.12 pin																							
			Low	0								Read: pin driver is low																							
			High	1								Read: pin driver is high																							
			Set	1								Write: writing a '1' sets the pin high; writing a '0' has no effect																							
N	RW	PIN13										P0.13 pin																							
			Low	0								Read: pin driver is low																							
			High	1								Read: pin driver is high																							
			Set	1								Write: writing a '1' sets the pin high; writing a '0' has no effect																							
O	RW	PIN14										P0.14 pin																							
			Low	0								Read: pin driver is low																							
			High	1								Read: pin driver is high																							
			Set	1								Write: writing a '1' sets the pin high; writing a '0' has no effect																							
P	RW	PIN15										P0.15 pin																							
			Low	0								Read: pin driver is low																							
			High	1								Read: pin driver is high																							
			Set	1								Write: writing a '1' sets the pin high; writing a '0' has no effect																							
Q	RW	PIN16										P0.16 pin																							
			Low	0								Read: pin driver is low																							
			High	1								Read: pin driver is high																							
			Set	1								Write: writing a '1' sets the pin high; writing a '0' has no effect																							
R	RW	PIN17										P0.17 pin																							
			Low	0								Read: pin driver is low																							
			High	1								Read: pin driver is high																							
			Set	1								Write: writing a '1' sets the pin high; writing a '0' has no effect																							
S	RW	PIN18										P0.18 pin																							
			Low	0								Read: pin driver is low																							
			High	1								Read: pin driver is high																							
			Set	1								Write: writing a '1' sets the pin high; writing a '0' has no effect																							
T	RW	PIN19										P0.19 pin																							
			Low	0								Read: pin driver is low																							
			High	1								Read: pin driver is high																							
			Set	1								Write: writing a '1' sets the pin high; writing a '0' has no effect																							
U	RW	PIN20										P0.20 pin																							
			Low	0								Read: pin driver is low																							
			High	1								Read: pin driver is high																							
			Set	1								Write: writing a '1' sets the pin high; writing a '0' has no effect																							
V	RW	PIN21										P0.21 pin																							
			Low	0								Read: pin driver is low																							
			High	1								Read: pin driver is high																							
			Set	1								Write: writing a '1' sets the pin high; writing a '0' has no effect																							
W	RW	PIN22										P0.22 pin																							
			Low	0								Read: pin driver is low																							

Bit number				31	30	29	28	27	26	25	24	23	22	21	20	19	18	17	16	15	14	13	12	11	10	9	8	7	6	5	4	3	2	1	0
Id				f	e	d	c	b	a	Z	Y	X	W	V	U	T	S	R	Q	P	O	N	M	L	K	J	I	H	G	F	E	D	C	B	A
Reset 0x00000000				**0**	**0**	**0**	**0**	**0**	**0**	**0**	**0**	**0**	**0**	**0**	**0**	**0**	**0**	**0**	**0**	**0**	**0**	**0**	**0**	**0**	**0**	**0**	**0**	**0**	**0**	**0**	**0**	**0**	**0**	**0**	**0**
Id	**RW**	**Field**	**Value Id**	**Value**																															**Description**
			High	1																															Read: pin driver is high
			Set	1																															Write: writing a '1' sets the pin high; writing a '0' has no effect
X	RW	PIN23																																	P0.23 pin
			Low	0																															Read: pin driver is low
			High	1																															Read: pin driver is high
			Set	1																															Write: writing a '1' sets the pin high; writing a '0' has no effect
Y	RW	PIN24																																	P0.24 pin
			Low	0																															Read: pin driver is low
			High	1																															Read: pin driver is high
			Set	1																															Write: writing a '1' sets the pin high; writing a '0' has no effect
Z	RW	PIN25																																	P0.25 pin
			Low	0																															Read: pin driver is low
			High	1																															Read: pin driver is high
			Set	1																															Write: writing a '1' sets the pin high; writing a '0' has no effect
a	RW	PIN26																																	P0.26 pin
			Low	0																															Read: pin driver is low
			High	1																															Read: pin driver is high
			Set	1																															Write: writing a '1' sets the pin high; writing a '0' has no effect
b	RW	PIN27																																	P0.27 pin
			Low	0																															Read: pin driver is low
			High	1																															Read: pin driver is high
			Set	1																															Write: writing a '1' sets the pin high; writing a '0' has no effect
c	RW	PIN28																																	P0.28 pin
			Low	0																															Read: pin driver is low
			High	1																															Read: pin driver is high
			Set	1																															Write: writing a '1' sets the pin high; writing a '0' has no effect
d	RW	PIN29																																	P0.29 pin
			Low	0																															Read: pin driver is low
			High	1																															Read: pin driver is high
			Set	1																															Write: writing a '1' sets the pin high; writing a '0' has no effect
e	RW	PIN30																																	P0.30 pin
			Low	0																															Read: pin driver is low
			High	1																															Read: pin driver is high
			Set	1																															Write: writing a '1' sets the pin high; writing a '0' has no effect
f	RW	PIN31																																	P0.31 pin
			Low	0																															Read: pin driver is low
			High	1																															Read: pin driver is high
			Set	1																															Write: writing a '1' sets the pin high; writing a '0' has no effect

20.3.3 OUTCLR

Address offset: 0x50C

Clear individual bits in GPIO port

Read: reads value of OUT register.

Bit number				31	30	29	28	27	26	25	24	23	22	21	20	19	18	17	16	15	14	13	12	11	10	9	8	7	6	5	4	3	2	1	0
Id				f	e	d	c	b	a	Z	Y	X	W	V	U	T	S	R	Q	P	O	N	M	L	K	J	I	H	G	F	E	D	C	B	A
Reset 0x00000000				**0**	**0**	**0**	**0**	**0**	**0**	**0**	**0**	**0**	**0**	**0**	**0**	**0**	**0**	**0**	**0**	**0**	**0**	**0**	**0**	**0**	**0**	**0**	**0**	**0**	**0**	**0**	**0**	**0**	**0**	**0**	**0**
Id	**RW**	**Field**	**Value Id**	**Value**																															**Description**
A	RW	PIN0																																	P0.0 pin
			Low	0																															Read: pin driver is low
			High	1																															Read: pin driver is high
			Clear	1																															Write: writing a '1' sets the pin low; writing a '0' has no effect
B	RW	PIN1																																	P0.1 pin

Bit number				31	30	29	28	27	26	25	24	23	22	21	20	19	18	17	16	15	14	13	12	11	10	9	8	7	6	5	4	3	2	1	0
Id				f	e	d	c	b	a	Z	Y	X	W	V	U	T	S	R	Q	P	O	N	M	L	K	J	I	H	G	F	E	D	C	B	A
Reset 0x00000000				**0**	**0**	**0**	**0**	**0**	**0**	**0**	**0**	**0**	**0**	**0**	**0**	**0**	**0**	**0**	**0**	**0**	**0**	**0**	**0**	**0**	**0**	**0**	**0**	**0**	**0**	**0**	**0**	**0**	**0**	**0**	**0**
Id	**RW**	**Field**	**Value Id**	**Value**								**Description**																							
			Low	0								Read: pin driver is low																							
			High	1								Read: pin driver is high																							
			Clear	1								Write: writing a '1' sets the pin low; writing a '0' has no effect																							
C	RW	PIN2										P0.2 pin																							
			Low	0								Read: pin driver is low																							
			High	1								Read: pin driver is high																							
			Clear	1								Write: writing a '1' sets the pin low; writing a '0' has no effect																							
D	RW	PIN3										P0.3 pin																							
			Low	0								Read: pin driver is low																							
			High	1								Read: pin driver is high																							
			Clear	1								Write: writing a '1' sets the pin low; writing a '0' has no effect																							
E	RW	PIN4										P0.4 pin																							
			Low	0								Read: pin driver is low																							
			High	1								Read: pin driver is high																							
			Clear	1								Write: writing a '1' sets the pin low; writing a '0' has no effect																							
F	RW	PIN5										P0.5 pin																							
			Low	0								Read: pin driver is low																							
			High	1								Read: pin driver is high																							
			Clear	1								Write: writing a '1' sets the pin low; writing a '0' has no effect																							
G	RW	PIN6										P0.6 pin																							
			Low	0								Read: pin driver is low																							
			High	1								Read: pin driver is high																							
			Clear	1								Write: writing a '1' sets the pin low; writing a '0' has no effect																							
H	RW	PIN7										P0.7 pin																							
			Low	0								Read: pin driver is low																							
			High	1								Read: pin driver is high																							
			Clear	1								Write: writing a '1' sets the pin low; writing a '0' has no effect																							
I	RW	PIN8										P0.8 pin																							
			Low	0								Read: pin driver is low																							
			High	1								Read: pin driver is high																							
			Clear	1								Write: writing a '1' sets the pin low; writing a '0' has no effect																							
J	RW	PIN9										P0.9 pin																							
			Low	0								Read: pin driver is low																							
			High	1								Read: pin driver is high																							
			Clear	1								Write: writing a '1' sets the pin low; writing a '0' has no effect																							
K	RW	PIN10										P0.10 pin																							
			Low	0								Read: pin driver is low																							
			High	1								Read: pin driver is high																							
			Clear	1								Write: writing a '1' sets the pin low; writing a '0' has no effect																							
L	RW	PIN11										P0.11 pin																							
			Low	0								Read: pin driver is low																							
			High	1								Read: pin driver is high																							
			Clear	1								Write: writing a '1' sets the pin low; writing a '0' has no effect																							
M	RW	PIN12										P0.12 pin																							
			Low	0								Read: pin driver is low																							
			High	1								Read: pin driver is high																							
			Clear	1								Write: writing a '1' sets the pin low; writing a '0' has no effect																							
N	RW	PIN13										P0.13 pin																							
			Low	0								Read: pin driver is low																							
			High	1								Read: pin driver is high																							
			Clear	1								Write: writing a '1' sets the pin low; writing a '0' has no effect																							
O	RW	PIN14										P0.14 pin																							
			Low	0								Read: pin driver is low																							
			High	1								Read: pin driver is high																							
			Clear	1								Write: writing a '1' sets the pin low; writing a '0' has no effect																							

Bit number				31	30	29	28	27	26	25	24	23	22	21	20	19	18	17	16	15	14	13	12	11	10	9	8	7	6	5	4	3	2	1	0
Id				f	e	d	c	b	a	Z	Y	X	W	V	U	T	S	R	Q	P	O	N	M	L	K	J	I	H	G	F	E	D	C	B	A
Reset 0x00000000				**0**	**0**	**0**	**0**	**0**	**0**	**0**	**0**	**0**	**0**	**0**	**0**	**0**	**0**	**0**	**0**	**0**	**0**	**0**	**0**	**0**	**0**	**0**	**0**	**0**	**0**	**0**	**0**	**0**	**0**	**0**	**0**
Id	**RW**	**Field**	**Value Id**	**Value**																															**Description**
P	RW	PIN15																																	P0.15 pin
			Low	0																															Read: pin driver is low
			High	1																															Read: pin driver is high
			Clear	1																															Write: writing a '1' sets the pin low; writing a '0' has no effect
Q	RW	PIN16																																	P0.16 pin
			Low	0																															Read: pin driver is low
			High	1																															Read: pin driver is high
			Clear	1																															Write: writing a '1' sets the pin low; writing a '0' has no effect
R	RW	PIN17																																	P0.17 pin
			Low	0																															Read: pin driver is low
			High	1																															Read: pin driver is high
			Clear	1																															Write: writing a '1' sets the pin low; writing a '0' has no effect
S	RW	PIN18																																	P0.18 pin
			Low	0																															Read: pin driver is low
			High	1																															Read: pin driver is high
			Clear	1																															Write: writing a '1' sets the pin low; writing a '0' has no effect
T	RW	PIN19																																	P0.19 pin
			Low	0																															Read: pin driver is low
			High	1																															Read: pin driver is high
			Clear	1																															Write: writing a '1' sets the pin low; writing a '0' has no effect
U	RW	PIN20																																	P0.20 pin
			Low	0																															Read: pin driver is low
			High	1																															Read: pin driver is high
			Clear	1																															Write: writing a '1' sets the pin low; writing a '0' has no effect
V	RW	PIN21																																	P0.21 pin
			Low	0																															Read: pin driver is low
			High	1																															Read: pin driver is high
			Clear	1																															Write: writing a '1' sets the pin low; writing a '0' has no effect
W	RW	PIN22																																	P0.22 pin
			Low	0																															Read: pin driver is low
			High	1																															Read: pin driver is high
			Clear	1																															Write: writing a '1' sets the pin low; writing a '0' has no effect
X	RW	PIN23																																	P0.23 pin
			Low	0																															Read: pin driver is low
			High	1																															Read: pin driver is high
			Clear	1																															Write: writing a '1' sets the pin low; writing a '0' has no effect
Y	RW	PIN24																																	P0.24 pin
			Low	0																															Read: pin driver is low
			High	1																															Read: pin driver is high
			Clear	1																															Write: writing a '1' sets the pin low; writing a '0' has no effect
Z	RW	PIN25																																	P0.25 pin
			Low	0																															Read: pin driver is low
			High	1																															Read: pin driver is high
			Clear	1																															Write: writing a '1' sets the pin low; writing a '0' has no effect
a	RW	PIN26																																	P0.26 pin
			Low	0																															Read: pin driver is low
			High	1																															Read: pin driver is high
			Clear	1																															Write: writing a '1' sets the pin low; writing a '0' has no effect
b	RW	PIN27																																	P0.27 pin
			Low	0																															Read: pin driver is low
			High	1																															Read: pin driver is high
			Clear	1																															Write: writing a '1' sets the pin low; writing a '0' has no effect
c	RW	PIN28																																	P0.28 pin
			Low	0																															Read: pin driver is low
			High	1																															Read: pin driver is high

Bit number				31	30	29	28	27	26	25	24	23	22	21	20	19	18	17	16	15	14	13	12	11	10	9	8	7	6	5	4	3	2	1	0
Id				f	e	d	c	b	a	Z	Y	X	W	V	U	T	S	R	Q	P	O	N	M	L	K	J	I	H	G	F	E	D	C	B	A
Reset 0x00000000				**0**	**0**	**0**	**0**	**0**	**0**	**0**	**0**	**0**	**0**	**0**	**0**	**0**	**0**	**0**	**0**	**0**	**0**	**0**	**0**	**0**	**0**	**0**	**0**	**0**	**0**	**0**	**0**	**0**	**0**	**0**	**0**
Id	**RW**	**Field**	**Value Id**	**Value**								**Description**																							
			Clear	1								Write: writing a '1' sets the pin low; writing a '0' has no effect																							
d	RW	PIN29										P0.29 pin																							
			Low	0								Read: pin driver is low																							
			High	1								Read: pin driver is high																							
			Clear	1								Write: writing a '1' sets the pin low; writing a '0' has no effect																							
e	RW	PIN30										P0.30 pin																							
			Low	0								Read: pin driver is low																							
			High	1								Read: pin driver is high																							
			Clear	1								Write: writing a '1' sets the pin low; writing a '0' has no effect																							
f	RW	PIN31										P0.31 pin																							
			Low	0								Read: pin driver is low																							
			High	1								Read: pin driver is high																							
			Clear	1								Write: writing a '1' sets the pin low; writing a '0' has no effect																							

20.3.4 IN

Address offset: 0x510

Read GPIO port

Bit number				31	30	29	28	27	26	25	24	23	22	21	20	19	18	17	16	15	14	13	12	11	10	9	8	7	6	5	4	3	2	1	0
Id				f	e	d	c	b	a	Z	Y	X	W	V	U	T	S	R	Q	P	O	N	M	L	K	J	I	H	G	F	E	D	C	B	A
Reset 0x00000000				**0**	**0**	**0**	**0**	**0**	**0**	**0**	**0**	**0**	**0**	**0**	**0**	**0**	**0**	**0**	**0**	**0**	**0**	**0**	**0**	**0**	**0**	**0**	**0**	**0**	**0**	**0**	**0**	**0**	**0**	**0**	**0**
Id	**RW**	**Field**	**Value Id**	**Value**								**Description**																							
A	R	PIN0										P0.0 pin																							
			Low	0								Pin input is low																							
			High	1								Pin input is high																							
B	R	PIN1										P0.1 pin																							
			Low	0								Pin input is low																							
			High	1								Pin input is high																							
C	R	PIN2										P0.2 pin																							
			Low	0								Pin input is low																							
			High	1								Pin input is high																							
D	R	PIN3										P0.3 pin																							
			Low	0								Pin input is low																							
			High	1								Pin input is high																							
E	R	PIN4										P0.4 pin																							
			Low	0								Pin input is low																							
			High	1								Pin input is high																							
F	R	PIN5										P0.5 pin																							
			Low	0								Pin input is low																							
			High	1								Pin input is high																							
G	R	PIN6										P0.6 pin																							
			Low	0								Pin input is low																							
			High	1								Pin input is high																							
H	R	PIN7										P0.7 pin																							
			Low	0								Pin input is low																							
			High	1								Pin input is high																							
I	R	PIN8										P0.8 pin																							
			Low	0								Pin input is low																							
			High	1								Pin input is high																							
J	R	PIN9										P0.9 pin																							
			Low	0								Pin input is low																							
			High	1								Pin input is high																							
K	R	PIN10										P0.10 pin																							
			Low	0								Pin input is low																							

Bit number				31	30	29	28	27	26	25	24	23	22	21	20	19	18	17	16	15	14	13	12	11	10	9	8	7	6	5	4	3	2	1	0
Id				f	e	d	c	b	a	Z	Y	X	W	V	U	T	S	R	Q	P	O	N	M	L	K	J	I	H	G	F	E	D	C	B	A
Reset 0x00000000				**0**	**0**	**0**	**0**	**0**	**0**	**0**	**0**	**0**	**0**	**0**	**0**	**0**	**0**	**0**	**0**	**0**	**0**	**0**	**0**	**0**	**0**	**0**	**0**	**0**	**0**	**0**	**0**	**0**	**0**	**0**	**0**
Id	**RW**	**Field**	**Value Id**	**Value**								**Description**																							
			High	1								Pin input is high																							
L	R	PIN11										P0.11 pin																							
			Low	0								Pin input is low																							
			High	1								Pin input is high																							
M	R	PIN12										P0.12 pin																							
			Low	0								Pin input is low																							
			High	1								Pin input is high																							
N	R	PIN13										P0.13 pin																							
			Low	0								Pin input is low																							
			High	1								Pin input is high																							
O	R	PIN14										P0.14 pin																							
			Low	0								Pin input is low																							
			High	1								Pin input is high																							
P	R	PIN15										P0.15 pin																							
			Low	0								Pin input is low																							
			High	1								Pin input is high																							
Q	R	PIN16										P0.16 pin																							
			Low	0								Pin input is low																							
			High	1								Pin input is high																							
R	R	PIN17										P0.17 pin																							
			Low	0								Pin input is low																							
			High	1								Pin input is high																							
S	R	PIN18										P0.18 pin																							
			Low	0								Pin input is low																							
			High	1								Pin input is high																							
T	R	PIN19										P0.19 pin																							
			Low	0								Pin input is low																							
			High	1								Pin input is high																							
U	R	PIN20										P0.20 pin																							
			Low	0								Pin input is low																							
			High	1								Pin input is high																							
V	R	PIN21										P0.21 pin																							
			Low	0								Pin input is low																							
			High	1								Pin input is high																							
W	R	PIN22										P0.22 pin																							
			Low	0								Pin input is low																							
			High	1								Pin input is high																							
X	R	PIN23										P0.23 pin																							
			Low	0								Pin input is low																							
			High	1								Pin input is high																							
Y	R	PIN24										P0.24 pin																							
			Low	0								Pin input is low																							
			High	1								Pin input is high																							
Z	R	PIN25										P0.25 pin																							
			Low	0								Pin input is low																							
			High	1								Pin input is high																							
a	R	PIN26										P0.26 pin																							
			Low	0								Pin input is low																							
			High	1								Pin input is high																							
b	R	PIN27										P0.27 pin																							
			Low	0								Pin input is low																							
			High	1								Pin input is high																							
c	R	PIN28										P0.28 pin																							
			Low	0								Pin input is low																							
			High	1								Pin input is high																							

Bit number				31	30	29	28	27	26	25	24	23	22	21	20	19	18	17	16	15	14	13	12	11	10	9	8	7	6	5	4	3	2	1	0
Id				f	e	d	c	b	a	Z	Y	X	W	V	U	T	S	R	Q	P	O	N	M	L	K	J	I	H	G	F	E	D	C	B	A
Reset 0x00000000				**0**	**0**	**0**	**0**	**0**	**0**	**0**	**0**	**0**	**0**	**0**	**0**	**0**	**0**	**0**	**0**	**0**	**0**	**0**	**0**	**0**	**0**	**0**	**0**	**0**	**0**	**0**	**0**	**0**	**0**	**0**	**0**
Id	**RW**	**Field**	**Value Id**	**Value**								**Description**																							
d	R	PIN29										P0.29 pin																							
			Low	0								Pin input is low																							
			High	1								Pin input is high																							
e	R	PIN30										P0.30 pin																							
			Low	0								Pin input is low																							
			High	1								Pin input is high																							
f	R	PIN31										P0.31 pin																							
			Low	0								Pin input is low																							
			High	1								Pin input is high																							

20.3.5 DIR

Address offset: 0x514

Direction of GPIO pins

Bit number				31	30	29	28	27	26	25	24	23	22	21	20	19	18	17	16	15	14	13	12	11	10	9	8	7	6	5	4	3	2	1	0
Id				f	e	d	c	b	a	Z	Y	X	W	V	U	T	S	R	Q	P	O	N	M	L	K	J	I	H	G	F	E	D	C	B	A
Reset 0x00000000				**0**	**0**	**0**	**0**	**0**	**0**	**0**	**0**	**0**	**0**	**0**	**0**	**0**	**0**	**0**	**0**	**0**	**0**	**0**	**0**	**0**	**0**	**0**	**0**	**0**	**0**	**0**	**0**	**0**	**0**	**0**	**0**
Id	**RW**	**Field**	**Value Id**	**Value**								**Description**																							
A	RW	PIN0										P0.0 pin																							
			Input	0								Pin set as input																							
			Output	1								Pin set as output																							
B	RW	PIN1										P0.1 pin																							
			Input	0								Pin set as input																							
			Output	1								Pin set as output																							
C	RW	PIN2										P0.2 pin																							
			Input	0								Pin set as input																							
			Output	1								Pin set as output																							
D	RW	PIN3										P0.3 pin																							
			Input	0								Pin set as input																							
			Output	1								Pin set as output																							
E	RW	PIN4										P0.4 pin																							
			Input	0								Pin set as input																							
			Output	1								Pin set as output																							
F	RW	PIN5										P0.5 pin																							
			Input	0								Pin set as input																							
			Output	1								Pin set as output																							
G	RW	PIN6										P0.6 pin																							
			Input	0								Pin set as input																							
			Output	1								Pin set as output																							
H	RW	PIN7										P0.7 pin																							
			Input	0								Pin set as input																							
			Output	1								Pin set as output																							
I	RW	PIN8										P0.8 pin																							
			Input	0								Pin set as input																							
			Output	1								Pin set as output																							
J	RW	PIN9										P0.9 pin																							
			Input	0								Pin set as input																							
			Output	1								Pin set as output																							
K	RW	PIN10										P0.10 pin																							
			Input	0								Pin set as input																							
			Output	1								Pin set as output																							
L	RW	PIN11										P0.11 pin																							
			Input	0								Pin set as input																							
			Output	1								Pin set as output																							

Bit number				31	30	29	28	27	26	25	24	23	22	21	20	19	18	17	16	15	14	13	12	11	10	9	8	7	6	5	4	3	2	1	0
Id				f	e	d	c	b	a	Z	Y	X	W	V	U	T	S	R	Q	P	O	N	M	L	K	J	I	H	G	F	E	D	C	B	A
Reset 0x00000000				**0**	**0**	**0**	**0**	**0**	**0**	**0**	**0**	**0**	**0**	**0**	**0**	**0**	**0**	**0**	**0**	**0**	**0**	**0**	**0**	**0**	**0**	**0**	**0**	**0**	**0**	**0**	**0**	**0**	**0**	**0**	**0**
Id	**RW**	**Field**	**Value Id**	**Value**								**Description**																							
M	RW	PIN12										P0.12 pin																							
			Input	0								Pin set as input																							
			Output	1								Pin set as output																							
N	RW	PIN13										P0.13 pin																							
			Input	0								Pin set as input																							
			Output	1								Pin set as output																							
O	RW	PIN14										P0.14 pin																							
			Input	0								Pin set as input																							
			Output	1								Pin set as output																							
P	RW	PIN15										P0.15 pin																							
			Input	0								Pin set as input																							
			Output	1								Pin set as output																							
Q	RW	PIN16										P0.16 pin																							
			Input	0								Pin set as input																							
			Output	1								Pin set as output																							
R	RW	PIN17										P0.17 pin																							
			Input	0								Pin set as input																							
			Output	1								Pin set as output																							
S	RW	PIN18										P0.18 pin																							
			Input	0								Pin set as input																							
			Output	1								Pin set as output																							
T	RW	PIN19										P0.19 pin																							
			Input	0								Pin set as input																							
			Output	1								Pin set as output																							
U	RW	PIN20										P0.20 pin																							
			Input	0								Pin set as input																							
			Output	1								Pin set as output																							
V	RW	PIN21										P0.21 pin																							
			Input	0								Pin set as input																							
			Output	1								Pin set as output																							
W	RW	PIN22										P0.22 pin																							
			Input	0								Pin set as input																							
			Output	1								Pin set as output																							
X	RW	PIN23										P0.23 pin																							
			Input	0								Pin set as input																							
			Output	1								Pin set as output																							
Y	RW	PIN24										P0.24 pin																							
			Input	0								Pin set as input																							
			Output	1								Pin set as output																							
Z	RW	PIN25										P0.25 pin																							
			Input	0								Pin set as input																							
			Output	1								Pin set as output																							
a	RW	PIN26										P0.26 pin																							
			Input	0								Pin set as input																							
			Output	1								Pin set as output																							
b	RW	PIN27										P0.27 pin																							
			Input	0								Pin set as input																							
			Output	1								Pin set as output																							
c	RW	PIN28										P0.28 pin																							
			Input	0								Pin set as input																							
			Output	1								Pin set as output																							
d	RW	PIN29										P0.29 pin																							
			Input	0								Pin set as input																							
			Output	1								Pin set as output																							
e	RW	PIN30										P0.30 pin																							

Bit number				31	30	29	28	27	26	25	24	23	22	21	20	19	18	17	16	15	14	13	12	11	10	9	8	7	6	5	4	3	2	1	0
Id				f	e	d	c	b	a	Z	Y	X	W	V	U	T	S	R	Q	P	O	N	M	L	K	J	I	H	G	F	E	D	C	B	A
Reset 0x00000000				**0**	**0**	**0**	**0**	**0**	**0**	**0**	**0**	**0**	**0**	**0**	**0**	**0**	**0**	**0**	**0**	**0**	**0**	**0**	**0**	**0**	**0**	**0**	**0**	**0**	**0**	**0**	**0**	**0**	**0**	**0**	**0**
Id	**RW**	**Field**	**Value Id**	**Value**								**Description**																							
			Input	0								Pin set as input																							
			Output	1								Pin set as output																							
f	RW	PIN31										P0.31 pin																							
			Input	0								Pin set as input																							
			Output	1								Pin set as output																							

20.3.6 DIRSET

Address offset: 0x518

DIR set register

Read: reads value of DIR register.

Bit number				31	30	29	28	27	26	25	24	23	22	21	20	19	18	17	16	15	14	13	12	11	10	9	8	7	6	5	4	3	2	1	0
Id				f	e	d	c	b	a	Z	Y	X	W	V	U	T	S	R	Q	P	O	N	M	L	K	J	I	H	G	F	E	D	C	B	A
Reset 0x00000000				**0**	**0**	**0**	**0**	**0**	**0**	**0**	**0**	**0**	**0**	**0**	**0**	**0**	**0**	**0**	**0**	**0**	**0**	**0**	**0**	**0**	**0**	**0**	**0**	**0**	**0**	**0**	**0**	**0**	**0**	**0**	**0**
Id	**RW**	**Field**	**Value Id**	**Value**								**Description**																							
A	RW	PIN0										Set as output pin 0																							
			Input	0								Read: pin set as input																							
			Output	1								Read: pin set as output																							
			Set	1								Write: writing a '1' sets pin to output; writing a '0' has no effect																							
B	RW	PIN1										Set as output pin 1																							
			Input	0								Read: pin set as input																							
			Output	1								Read: pin set as output																							
			Set	1								Write: writing a '1' sets pin to output; writing a '0' has no effect																							
C	RW	PIN2										Set as output pin 2																							
			Input	0								Read: pin set as input																							
			Output	1								Read: pin set as output																							
			Set	1								Write: writing a '1' sets pin to output; writing a '0' has no effect																							
D	RW	PIN3										Set as output pin 3																							
			Input	0								Read: pin set as input																							
			Output	1								Read: pin set as output																							
			Set	1								Write: writing a '1' sets pin to output; writing a '0' has no effect																							
E	RW	PIN4										Set as output pin 4																							
			Input	0								Read: pin set as input																							
			Output	1								Read: pin set as output																							
			Set	1								Write: writing a '1' sets pin to output; writing a '0' has no effect																							
F	RW	PIN5										Set as output pin 5																							
			Input	0								Read: pin set as input																							
			Output	1								Read: pin set as output																							
			Set	1								Write: writing a '1' sets pin to output; writing a '0' has no effect																							
G	RW	PIN6										Set as output pin 6																							
			Input	0								Read: pin set as input																							
			Output	1								Read: pin set as output																							
			Set	1								Write: writing a '1' sets pin to output; writing a '0' has no effect																							
H	RW	PIN7										Set as output pin 7																							
			Input	0								Read: pin set as input																							
			Output	1								Read: pin set as output																							
			Set	1								Write: writing a '1' sets pin to output; writing a '0' has no effect																							
I	RW	PIN8										Set as output pin 8																							
			Input	0								Read: pin set as input																							
			Output	1								Read: pin set as output																							
			Set	1								Write: writing a '1' sets pin to output; writing a '0' has no effect																							
J	RW	PIN9										Set as output pin 9																							
			Input	0								Read: pin set as input																							

Bit number				31	30	29	28	27	26	25	24	23	22	21	20	19	18	17	16	15	14	13	12	11	10	9	8	7	6	5	4	3	2	1	0
Id				f	e	d	c	b	a	Z	Y	X	W	V	U	T	S	R	Q	P	O	N	M	L	K	J	I	H	G	F	E	D	C	B	A
Reset 0x00000000				**0**	**0**	**0**	**0**	**0**	**0**	**0**	**0**	**0**	**0**	**0**	**0**	**0**	**0**	**0**	**0**	**0**	**0**	**0**	**0**	**0**	**0**	**0**	**0**	**0**	**0**	**0**	**0**	**0**	**0**	**0**	**0**
Id	**RW**	**Field**	**Value Id**	**Value**																															**Description**
			Output	1																															Read: pin set as output
			Set	1																															Write: writing a '1' sets pin to output; writing a '0' has no effect
K	RW	PIN10																																	Set as output pin 10
			Input	0																															Read: pin set as input
			Output	1																															Read: pin set as output
			Set	1																															Write: writing a '1' sets pin to output; writing a '0' has no effect
L	RW	PIN11																																	Set as output pin 11
			Input	0																															Read: pin set as input
			Output	1																															Read: pin set as output
			Set	1																															Write: writing a '1' sets pin to output; writing a '0' has no effect
M	RW	PIN12																																	Set as output pin 12
			Input	0																															Read: pin set as input
			Output	1																															Read: pin set as output
			Set	1																															Write: writing a '1' sets pin to output; writing a '0' has no effect
N	RW	PIN13																																	Set as output pin 13
			Input	0																															Read: pin set as input
			Output	1																															Read: pin set as output
			Set	1																															Write: writing a '1' sets pin to output; writing a '0' has no effect
O	RW	PIN14																																	Set as output pin 14
			Input	0																															Read: pin set as input
			Output	1																															Read: pin set as output
			Set	1																															Write: writing a '1' sets pin to output; writing a '0' has no effect
P	RW	PIN15																																	Set as output pin 15
			Input	0																															Read: pin set as input
			Output	1																															Read: pin set as output
			Set	1																															Write: writing a '1' sets pin to output; writing a '0' has no effect
Q	RW	PIN16																																	Set as output pin 16
			Input	0																															Read: pin set as input
			Output	1																															Read: pin set as output
			Set	1																															Write: writing a '1' sets pin to output; writing a '0' has no effect
R	RW	PIN17																																	Set as output pin 17
			Input	0																															Read: pin set as input
			Output	1																															Read: pin set as output
			Set	1																															Write: writing a '1' sets pin to output; writing a '0' has no effect
S	RW	PIN18																																	Set as output pin 18
			Input	0																															Read: pin set as input
			Output	1																															Read: pin set as output
			Set	1																															Write: writing a '1' sets pin to output; writing a '0' has no effect
T	RW	PIN19																																	Set as output pin 19
			Input	0																															Read: pin set as input
			Output	1																															Read: pin set as output
			Set	1																															Write: writing a '1' sets pin to output; writing a '0' has no effect
U	RW	PIN20																																	Set as output pin 20
			Input	0																															Read: pin set as input
			Output	1																															Read: pin set as output
			Set	1																															Write: writing a '1' sets pin to output; writing a '0' has no effect
V	RW	PIN21																																	Set as output pin 21
			Input	0																															Read: pin set as input
			Output	1																															Read: pin set as output
			Set	1																															Write: writing a '1' sets pin to output; writing a '0' has no effect
W	RW	PIN22																																	Set as output pin 22
			Input	0																															Read: pin set as input
			Output	1																															Read: pin set as output
			Set	1																															Write: writing a '1' sets pin to output; writing a '0' has no effect
X	RW	PIN23																																	Set as output pin 23

Bit number				31	30	29	28	27	26	25	24	23	22	21	20	19	18	17	16	15	14	13	12	11	10	9	8	7	6	5	4	3	2	1	0
Id				f	e	d	c	b	a	Z	Y	X	W	V	U	T	S	R	Q	P	O	N	M	L	K	J	I	H	G	F	E	D	C	B	A
Reset 0x00000000				**0**	**0**	**0**	**0**	**0**	**0**	**0**	**0**	**0**	**0**	**0**	**0**	**0**	**0**	**0**	**0**	**0**	**0**	**0**	**0**	**0**	**0**	**0**	**0**	**0**	**0**	**0**	**0**	**0**	**0**	**0**	**0**
Id	**RW**	**Field**	**Value Id**	**Value**																															**Description**
			Input	0																															Read: pin set as input
			Output	1																															Read: pin set as output
			Set	1																															Write: writing a '1' sets pin to output; writing a '0' has no effect
Y	RW	PIN24																																	Set as output pin 24
			Input	0																															Read: pin set as input
			Output	1																															Read: pin set as output
			Set	1																															Write: writing a '1' sets pin to output; writing a '0' has no effect
Z	RW	PIN25																																	Set as output pin 25
			Input	0																															Read: pin set as input
			Output	1																															Read: pin set as output
			Set	1																															Write: writing a '1' sets pin to output; writing a '0' has no effect
a	RW	PIN26																																	Set as output pin 26
			Input	0																															Read: pin set as input
			Output	1																															Read: pin set as output
			Set	1																															Write: writing a '1' sets pin to output; writing a '0' has no effect
b	RW	PIN27																																	Set as output pin 27
			Input	0																															Read: pin set as input
			Output	1																															Read: pin set as output
			Set	1																															Write: writing a '1' sets pin to output; writing a '0' has no effect
c	RW	PIN28																																	Set as output pin 28
			Input	0																															Read: pin set as input
			Output	1																															Read: pin set as output
			Set	1																															Write: writing a '1' sets pin to output; writing a '0' has no effect
d	RW	PIN29																																	Set as output pin 29
			Input	0																															Read: pin set as input
			Output	1																															Read: pin set as output
			Set	1																															Write: writing a '1' sets pin to output; writing a '0' has no effect
e	RW	PIN30																																	Set as output pin 30
			Input	0																															Read: pin set as input
			Output	1																															Read: pin set as output
			Set	1																															Write: writing a '1' sets pin to output; writing a '0' has no effect
f	RW	PIN31																																	Set as output pin 31
			Input	0																															Read: pin set as input
			Output	1																															Read: pin set as output
			Set	1																															Write: writing a '1' sets pin to output; writing a '0' has no effect

20.3.7 DIRCLR

Address offset: 0x51C

DIR clear register

Read: reads value of DIR register.

Bit number				31	30	29	28	27	26	25	24	23	22	21	20	19	18	17	16	15	14	13	12	11	10	9	8	7	6	5	4	3	2	1	0
Id				f	e	d	c	b	a	Z	Y	X	W	V	U	T	S	R	Q	P	O	N	M	L	K	J	I	H	G	F	E	D	C	B	A
Reset 0x00000000				**0**	**0**	**0**	**0**	**0**	**0**	**0**	**0**	**0**	**0**	**0**	**0**	**0**	**0**	**0**	**0**	**0**	**0**	**0**	**0**	**0**	**0**	**0**	**0**	**0**	**0**	**0**	**0**	**0**	**0**	**0**	**0**
Id	**RW**	**Field**	**Value Id**	**Value**																															**Description**
A	RW	PIN0																																	Set as input pin 0
			Input	0																															Read: pin set as input
			Output	1																															Read: pin set as output
			Clear	1																															Write: writing a '1' sets pin to input; writing a '0' has no effect
B	RW	PIN1																																	Set as input pin 1
			Input	0																															Read: pin set as input
			Output	1																															Read: pin set as output
			Clear	1																															Write: writing a '1' sets pin to input; writing a '0' has no effect

Bit number				31	30	29	28	27	26	25	24	23	22	21	20	19	18	17	16	15	14	13	12	11	10	9	8	7	6	5	4	3	2	1	0
Id				f	e	d	c	b	a	Z	Y	X	W	V	U	T	S	R	Q	P	O	N	M	L	K	J	I	H	G	F	E	D	C	B	A
Reset 0x00000000				**0**	**0**	**0**	**0**	**0**	**0**	**0**	**0**	**0**	**0**	**0**	**0**	**0**	**0**	**0**	**0**	**0**	**0**	**0**	**0**	**0**	**0**	**0**	**0**	**0**	**0**	**0**	**0**	**0**	**0**	**0**	**0**
Id	**RW**	**Field**	**Value Id**	**Value**																															**Description**
C	RW	PIN2																																	Set as input pin 2
			Input	0																															Read: pin set as input
			Output	1																															Read: pin set as output
			Clear	1																															Write: writing a '1' sets pin to input; writing a '0' has no effect
D	RW	PIN3																																	Set as input pin 3
			Input	0																															Read: pin set as input
			Output	1																															Read: pin set as output
			Clear	1																															Write: writing a '1' sets pin to input; writing a '0' has no effect
E	RW	PIN4																																	Set as input pin 4
			Input	0																															Read: pin set as input
			Output	1																															Read: pin set as output
			Clear	1																															Write: writing a '1' sets pin to input; writing a '0' has no effect
F	RW	PIN5																																	Set as input pin 5
			Input	0																															Read: pin set as input
			Output	1																															Read: pin set as output
			Clear	1																															Write: writing a '1' sets pin to input; writing a '0' has no effect
G	RW	PIN6																																	Set as input pin 6
			Input	0																															Read: pin set as input
			Output	1																															Read: pin set as output
			Clear	1																															Write: writing a '1' sets pin to input; writing a '0' has no effect
H	RW	PIN7																																	Set as input pin 7
			Input	0																															Read: pin set as input
			Output	1																															Read: pin set as output
			Clear	1																															Write: writing a '1' sets pin to input; writing a '0' has no effect
I	RW	PIN8																																	Set as input pin 8
			Input	0																															Read: pin set as input
			Output	1																															Read: pin set as output
			Clear	1																															Write: writing a '1' sets pin to input; writing a '0' has no effect
J	RW	PIN9																																	Set as input pin 9
			Input	0																															Read: pin set as input
			Output	1																															Read: pin set as output
			Clear	1																															Write: writing a '1' sets pin to input; writing a '0' has no effect
K	RW	PIN10																																	Set as input pin 10
			Input	0																															Read: pin set as input
			Output	1																															Read: pin set as output
			Clear	1																															Write: writing a '1' sets pin to input; writing a '0' has no effect
L	RW	PIN11																																	Set as input pin 11
			Input	0																															Read: pin set as input
			Output	1																															Read: pin set as output
			Clear	1																															Write: writing a '1' sets pin to input; writing a '0' has no effect
M	RW	PIN12																																	Set as input pin 12
			Input	0																															Read: pin set as input
			Output	1																															Read: pin set as output
			Clear	1																															Write: writing a '1' sets pin to input; writing a '0' has no effect
N	RW	PIN13																																	Set as input pin 13
			Input	0																															Read: pin set as input
			Output	1																															Read: pin set as output
			Clear	1																															Write: writing a '1' sets pin to input; writing a '0' has no effect
O	RW	PIN14																																	Set as input pin 14
			Input	0																															Read: pin set as input
			Output	1																															Read: pin set as output
			Clear	1																															Write: writing a '1' sets pin to input; writing a '0' has no effect
P	RW	PIN15																																	Set as input pin 15
			Input	0																															Read: pin set as input
			Output	1																															Read: pin set as output

Bit number				31	30	29	28	27	26	25	24	23	22	21	20	19	18	17	16	15	14	13	12	11	10	9	8	7	6	5	4	3	2	1	0
Id				f	e	d	c	b	a	Z	Y	X	W	V	U	T	S	R	Q	P	O	N	M	L	K	J	I	H	G	F	E	D	C	B	A
Reset 0x00000000				**0**	**0**	**0**	**0**	**0**	**0**	**0**	**0**	**0**	**0**	**0**	**0**	**0**	**0**	**0**	**0**	**0**	**0**	**0**	**0**	**0**	**0**	**0**	**0**	**0**	**0**	**0**	**0**	**0**	**0**	**0**	**0**
Id	**RW**	**Field**	**Value Id**	**Value**								**Description**																							
			Clear	1								Write: writing a '1' sets pin to input; writing a '0' has no effect																							
Q	RW	PIN16										Set as input pin 16																							
			Input	0								Read: pin set as input																							
			Output	1								Read: pin set as output																							
			Clear	1								Write: writing a '1' sets pin to input; writing a '0' has no effect																							
R	RW	PIN17										Set as input pin 17																							
			Input	0								Read: pin set as input																							
			Output	1								Read: pin set as output																							
			Clear	1								Write: writing a '1' sets pin to input; writing a '0' has no effect																							
S	RW	PIN18										Set as input pin 18																							
			Input	0								Read: pin set as input																							
			Output	1								Read: pin set as output																							
			Clear	1								Write: writing a '1' sets pin to input; writing a '0' has no effect																							
T	RW	PIN19										Set as input pin 19																							
			Input	0								Read: pin set as input																							
			Output	1								Read: pin set as output																							
			Clear	1								Write: writing a '1' sets pin to input; writing a '0' has no effect																							
U	RW	PIN20										Set as input pin 20																							
			Input	0								Read: pin set as input																							
			Output	1								Read: pin set as output																							
			Clear	1								Write: writing a '1' sets pin to input; writing a '0' has no effect																							
V	RW	PIN21										Set as input pin 21																							
			Input	0								Read: pin set as input																							
			Output	1								Read: pin set as output																							
			Clear	1								Write: writing a '1' sets pin to input; writing a '0' has no effect																							
W	RW	PIN22										Set as input pin 22																							
			Input	0								Read: pin set as input																							
			Output	1								Read: pin set as output																							
			Clear	1								Write: writing a '1' sets pin to input; writing a '0' has no effect																							
X	RW	PIN23										Set as input pin 23																							
			Input	0								Read: pin set as input																							
			Output	1								Read: pin set as output																							
			Clear	1								Write: writing a '1' sets pin to input; writing a '0' has no effect																							
Y	RW	PIN24										Set as input pin 24																							
			Input	0								Read: pin set as input																							
			Output	1								Read: pin set as output																							
			Clear	1								Write: writing a '1' sets pin to input; writing a '0' has no effect																							
Z	RW	PIN25										Set as input pin 25																							
			Input	0								Read: pin set as input																							
			Output	1								Read: pin set as output																							
			Clear	1								Write: writing a '1' sets pin to input; writing a '0' has no effect																							
a	RW	PIN26										Set as input pin 26																							
			Input	0								Read: pin set as input																							
			Output	1								Read: pin set as output																							
			Clear	1								Write: writing a '1' sets pin to input; writing a '0' has no effect																							
b	RW	PIN27										Set as input pin 27																							
			Input	0								Read: pin set as input																							
			Output	1								Read: pin set as output																							
			Clear	1								Write: writing a '1' sets pin to input; writing a '0' has no effect																							
c	RW	PIN28										Set as input pin 28																							
			Input	0								Read: pin set as input																							
			Output	1								Read: pin set as output																							
			Clear	1								Write: writing a '1' sets pin to input; writing a '0' has no effect																							
d	RW	PIN29										Set as input pin 29																							
			Input	0								Read: pin set as input																							

Bit number				31	30	29	28	27	26	25	24	23	22	21	20	19	18	17	16	15	14	13	12	11	10	9	8	7	6	5	4	3	2	1	0
Id				f	e	d	c	b	a	Z	Y	X	W	V	U	T	S	R	Q	P	O	N	M	L	K	J	I	H	G	F	E	D	C	B	A
Reset 0x00000000				**0**	**0**	**0**	**0**	**0**	**0**	**0**	**0**	**0**	**0**	**0**	**0**	**0**	**0**	**0**	**0**	**0**	**0**	**0**	**0**	**0**	**0**	**0**	**0**	**0**	**0**	**0**	**0**	**0**	**0**	**0**	**0**
Id	**RW**	**Field**	**Value Id**	**Value**																															**Description**
			Output	1																															Read: pin set as output
			Clear	1																															Write: writing a '1' sets pin to input; writing a '0' has no effect
e	RW	PIN30																																	Set as input pin 30
			Input	0																															Read: pin set as input
			Output	1																															Read: pin set as output
			Clear	1																															Write: writing a '1' sets pin to input; writing a '0' has no effect
f	RW	PIN31																																	Set as input pin 31
			Input	0																															Read: pin set as input
			Output	1																															Read: pin set as output
			Clear	1																															Write: writing a '1' sets pin to input; writing a '0' has no effect

20.3.8 LATCH

Address offset: 0x520

Latch register indicating what GPIO pins that have met the criteria set in the PIN_CNF[n].SENSE registers

Bit number				31	30	29	28	27	26	25	24	23	22	21	20	19	18	17	16	15	14	13	12	11	10	9	8	7	6	5	4	3	2	1	0
Id				f	e	d	c	b	a	Z	Y	X	W	V	U	T	S	R	Q	P	O	N	M	L	K	J	I	H	G	F	E	D	C	B	A
Reset 0x00000000				**0**	**0**	**0**	**0**	**0**	**0**	**0**	**0**	**0**	**0**	**0**	**0**	**0**	**0**	**0**	**0**	**0**	**0**	**0**	**0**	**0**	**0**	**0**	**0**	**0**	**0**	**0**	**0**	**0**	**0**	**0**	**0**
Id	**RW**	**Field**	**Value Id**	**Value**																															**Description**
A	RW	PIN0																																	Status on whether PIN0 has met criteria set in PIN_CNF0.SENSE register. Write '1' to clear.
			NotLatched	0																															Criteria has not been met
			Latched	1																															Criteria has been met
B	RW	PIN1																																	Status on whether PIN1 has met criteria set in PIN_CNF1.SENSE register. Write '1' to clear.
			NotLatched	0																															Criteria has not been met
			Latched	1																															Criteria has been met
C	RW	PIN2																																	Status on whether PIN2 has met criteria set in PIN_CNF2.SENSE register. Write '1' to clear.
			NotLatched	0																															Criteria has not been met
			Latched	1																															Criteria has been met
D	RW	PIN3																																	Status on whether PIN3 has met criteria set in PIN_CNF3.SENSE register. Write '1' to clear.
			NotLatched	0																															Criteria has not been met
			Latched	1																															Criteria has been met
E	RW	PIN4																																	Status on whether PIN4 has met criteria set in PIN_CNF4.SENSE register. Write '1' to clear.
			NotLatched	0																															Criteria has not been met
			Latched	1																															Criteria has been met
F	RW	PIN5																																	Status on whether PIN5 has met criteria set in PIN_CNF5.SENSE register. Write '1' to clear.
			NotLatched	0																															Criteria has not been met
			Latched	1																															Criteria has been met
G	RW	PIN6																																	Status on whether PIN6 has met criteria set in PIN_CNF6.SENSE register. Write '1' to clear.
			NotLatched	0																															Criteria has not been met
			Latched	1																															Criteria has been met
H	RW	PIN7																																	Status on whether PIN7 has met criteria set in PIN_CNF7.SENSE register. Write '1' to clear.
			NotLatched	0																															Criteria has not been met
			Latched	1																															Criteria has been met
I	RW	PIN8																																	Status on whether PIN8 has met criteria set in PIN_CNF8.SENSE register. Write '1' to clear.
			NotLatched	0																															Criteria has not been met

Bit number				31	30	29	28	27	26	25	24	23	22	21	20	19	18	17	16	15	14	13	12	11	10	9	8	7	6	5	4	3	2	1	0
Id				f	e	d	c	b	a	Z	Y	X	W	V	U	T	S	R	Q	P	O	N	M	L	K	J	I	H	G	F	E	D	C	B	A
Reset 0x00000000				**0**	**0**	**0**	**0**	**0**	**0**	**0**	**0**	**0**	**0**	**0**	**0**	**0**	**0**	**0**	**0**	**0**	**0**	**0**	**0**	**0**	**0**	**0**	**0**	**0**	**0**	**0**	**0**	**0**	**0**	**0**	**0**
Id	**RW**	**Field**	**Value Id**	**Value**																															**Description**
			Latched	1																															Criteria has been met
J	RW	PIN9																																	Status on whether PIN9 has met criteria set in PIN_CNF9.SENSE register. Write '1' to clear.
			NotLatched	0																															Criteria has not been met
			Latched	1																															Criteria has been met
K	RW	PIN10																																	Status on whether PIN10 has met criteria set in PIN_CNF10.SENSE register. Write '1' to clear.
			NotLatched	0																															Criteria has not been met
			Latched	1																															Criteria has been met
L	RW	PIN11																																	Status on whether PIN11 has met criteria set in PIN_CNF11.SENSE register. Write '1' to clear.
			NotLatched	0																															Criteria has not been met
			Latched	1																															Criteria has been met
M	RW	PIN12																																	Status on whether PIN12 has met criteria set in PIN_CNF12.SENSE register. Write '1' to clear.
			NotLatched	0																															Criteria has not been met
			Latched	1																															Criteria has been met
N	RW	PIN13																																	Status on whether PIN13 has met criteria set in PIN_CNF13.SENSE register. Write '1' to clear.
			NotLatched	0																															Criteria has not been met
			Latched	1																															Criteria has been met
O	RW	PIN14																																	Status on whether PIN14 has met criteria set in PIN_CNF14.SENSE register. Write '1' to clear.
			NotLatched	0																															Criteria has not been met
			Latched	1																															Criteria has been met
P	RW	PIN15																																	Status on whether PIN15 has met criteria set in PIN_CNF15.SENSE register. Write '1' to clear.
			NotLatched	0																															Criteria has not been met
			Latched	1																															Criteria has been met
Q	RW	PIN16																																	Status on whether PIN16 has met criteria set in PIN_CNF16.SENSE register. Write '1' to clear.
			NotLatched	0																															Criteria has not been met
			Latched	1																															Criteria has been met
R	RW	PIN17																																	Status on whether PIN17 has met criteria set in PIN_CNF17.SENSE register. Write '1' to clear.
			NotLatched	0																															Criteria has not been met
			Latched	1																															Criteria has been met
S	RW	PIN18																																	Status on whether PIN18 has met criteria set in PIN_CNF18.SENSE register. Write '1' to clear.
			NotLatched	0																															Criteria has not been met
			Latched	1																															Criteria has been met
T	RW	PIN19																																	Status on whether PIN19 has met criteria set in PIN_CNF19.SENSE register. Write '1' to clear.
			NotLatched	0																															Criteria has not been met
			Latched	1																															Criteria has been met
U	RW	PIN20																																	Status on whether PIN20 has met criteria set in PIN_CNF20.SENSE register. Write '1' to clear.
			NotLatched	0																															Criteria has not been met
			Latched	1																															Criteria has been met
V	RW	PIN21																																	Status on whether PIN21 has met criteria set in PIN_CNF21.SENSE register. Write '1' to clear.
			NotLatched	0																															Criteria has not been met
			Latched	1																															Criteria has been met
W	RW	PIN22																																	Status on whether PIN22 has met criteria set in PIN_CNF22.SENSE register. Write '1' to clear.

Bit number				31	30	29	28	27	26	25	24	23	22	21	20	19	18	17	16	15	14	13	12	11	10	9	8	7	6	5	4	3	2	1	0
Id				f	e	d	c	b	a	Z	Y	X	W	V	U	T	S	R	Q	P	O	N	M	L	K	J	I	H	G	F	E	D	C	B	A
Reset 0x00000000				**0**	**0**	**0**	**0**	**0**	**0**	**0**	**0**	**0**	**0**	**0**	**0**	**0**	**0**	**0**	**0**	**0**	**0**	**0**	**0**	**0**	**0**	**0**	**0**	**0**	**0**	**0**	**0**	**0**	**0**	**0**	**0**
Id	**RW**	**Field**	**Value Id**	**Value**								**Description**																							
			NotLatched	0								Criteria has not been met																							
			Latched	1								Criteria has been met																							
X	RW	PIN23										Status on whether PIN23 has met criteria set in PIN_CNF23.SENSE register. Write '1' to clear.																							
			NotLatched	0								Criteria has not been met																							
			Latched	1								Criteria has been met																							
Y	RW	PIN24										Status on whether PIN24 has met criteria set in PIN_CNF24.SENSE register. Write '1' to clear.																							
			NotLatched	0								Criteria has not been met																							
			Latched	1								Criteria has been met																							
Z	RW	PIN25										Status on whether PIN25 has met criteria set in PIN_CNF25.SENSE register. Write '1' to clear.																							
			NotLatched	0								Criteria has not been met																							
			Latched	1								Criteria has been met																							
a	RW	PIN26										Status on whether PIN26 has met criteria set in PIN_CNF26.SENSE register. Write '1' to clear.																							
			NotLatched	0								Criteria has not been met																							
			Latched	1								Criteria has been met																							
b	RW	PIN27										Status on whether PIN27 has met criteria set in PIN_CNF27.SENSE register. Write '1' to clear.																							
			NotLatched	0								Criteria has not been met																							
			Latched	1								Criteria has been met																							
c	RW	PIN28										Status on whether PIN28 has met criteria set in PIN_CNF28.SENSE register. Write '1' to clear.																							
			NotLatched	0								Criteria has not been met																							
			Latched	1								Criteria has been met																							
d	RW	PIN29										Status on whether PIN29 has met criteria set in PIN_CNF29.SENSE register. Write '1' to clear.																							
			NotLatched	0								Criteria has not been met																							
			Latched	1								Criteria has been met																							
e	RW	PIN30										Status on whether PIN30 has met criteria set in PIN_CNF30.SENSE register. Write '1' to clear.																							
			NotLatched	0								Criteria has not been met																							
			Latched	1								Criteria has been met																							
f	RW	PIN31										Status on whether PIN31 has met criteria set in PIN_CNF31.SENSE register. Write '1' to clear.																							
			NotLatched	0								Criteria has not been met																							
			Latched	1								Criteria has been met																							

20.3.9 DETECTMODE

Address offset: 0x524

Select between default DETECT signal behaviour and LDETECT mode

Bit number				31	30	29	28	27	26	25	24	23	22	21	20	19	18	17	16	15	14	13	12	11	10	9	8	7	6	5	4	3	2	1	0
Id																																			A
Reset 0x00000000				**0**	**0**	**0**	**0**	**0**	**0**	**0**	**0**	**0**	**0**	**0**	**0**	**0**	**0**	**0**	**0**	**0**	**0**	**0**	**0**	**0**	**0**	**0**	**0**	**0**	**0**	**0**	**0**	**0**	**0**	**0**	**0**
Id	**RW**	**Field**	**Value Id**	**Value**								**Description**																							
A	RW	DETECTMODE										Select between default DETECT signal behaviour and LDETECT mode																							
			Default	0								DETECT directly connected to PIN DETECT signals																							
			LDETECT	1								Use the latched LDETECT behaviour																							

20.3.10 PIN_CNF[0]

Address offset: 0x700

Configuration of GPIO pins

Bit number				31	30	29	28	27	26	25	24	23	22	21	20	19	18	17	16	15	14	13	12	11	10	9	8	7	6	5	4	3	2	1	0
Id																		E	E						D	D	D					C	C	B	A
Reset 0x00000002				**0**	**0**	**0**	**0**	**0**	**0**	**0**	**0**	**0**	**0**	**0**	**0**	**0**	**0**	**0**	**0**	**0**	**0**	**0**	**0**	**0**	**0**	**0**	**0**	**0**	**0**	**0**	**0**	**0**	**0**	**1**	**0**
Id	**RW**	**Field**	**Value Id**	**Value**																					**Description**										
A	RW	DIR																							Pin direction. Same physical register as DIR register										
			Input	0																					Configure pin as an input pin										
			Output	1																					Configure pin as an output pin										
B	RW	INPUT																							Connect or disconnect input buffer										
			Connect	0																					Connect input buffer										
			Disconnect	1																					Disconnect input buffer										
C	RW	PULL																							Pull configuration										
			Disabled	0																					No pull										
			Pulldown	1																					Pull down on pin										
			Pullup	3																					Pull up on pin										
D	RW	DRIVE																							Drive configuration										
			S0S1	0																					Standard '0', standard '1'										
			H0S1	1																					High drive '0', standard '1'										
			S0H1	2																					Standard '0', high drive '1'										
			H0H1	3																					High drive '0', high 'drive '1''										
			D0S1	4																					Disconnect '0' standard '1' (normally used for wired-or connections)										
			D0H1	5																					Disconnect '0', high drive '1' (normally used for wired-or connections)										
			S0D1	6																					Standard '0'. disconnect '1' (normally used for wired-and connections)										
			H0D1	7																					High drive '0', disconnect '1' (normally used for wired-and connections)										
E	RW	SENSE																							Pin sensing mechanism										
			Disabled	0																					Disabled										
			High	2																					Sense for high level										
			Low	3																					Sense for low level										

20.3.11 PIN_CNF[1]

Address offset: 0x704

Configuration of GPIO pins

Bit number				31	30	29	28	27	26	25	24	23	22	21	20	19	18	17	16	15	14	13	12	11	10	9	8	7	6	5	4	3	2	1	0
Id																		E	E						D	D	D					C	C	B	A
Reset 0x00000002				**0**	**0**	**0**	**0**	**0**	**0**	**0**	**0**	**0**	**0**	**0**	**0**	**0**	**0**	**0**	**0**	**0**	**0**	**0**	**0**	**0**	**0**	**0**	**0**	**0**	**0**	**0**	**0**	**0**	**0**	**1**	**0**
Id	**RW**	**Field**	**Value Id**	**Value**																					**Description**										
A	RW	DIR																							Pin direction. Same physical register as DIR register										
			Input	0																					Configure pin as an input pin										
			Output	1																					Configure pin as an output pin										
B	RW	INPUT																							Connect or disconnect input buffer										
			Connect	0																					Connect input buffer										
			Disconnect	1																					Disconnect input buffer										
C	RW	PULL																							Pull configuration										
			Disabled	0																					No pull										
			Pulldown	1																					Pull down on pin										
			Pullup	3																					Pull up on pin										
D	RW	DRIVE																							Drive configuration										
			S0S1	0																					Standard '0', standard '1'										
			H0S1	1																					High drive '0', standard '1'										

Bit number				31	30	29	28	27	26	25	24	23	22	21	20	19	18	17	16	15	14	13	12	11	10	9	8	7	6	5	4	3	2	1	0
Id																		E	E						D	D	D					C	C	B	A
Reset 0x00000002				**0**	**0**	**0**	**0**	**0**	**0**	**0**	**0**	**0**	**0**	**0**	**0**	**0**	**0**	**0**	**0**	**0**	**0**	**0**	**0**	**0**	**0**	**0**	**0**	**0**	**0**	**0**	**0**	**0**	**0**	**1**	**0**
Id	**RW**	**Field**	**Value Id**	**Value**																															
			S0H1	2																															
			H0H1	3																															
			D0S1	4																															
			D0H1	5																															
			S0D1	6																															
			H0D1	7																															
E	RW	SENSE																																	
			Disabled	0																															
			High	2																															
			Low	3																															

20.3.12 PIN_CNF[2]

Address offset: 0x708

Configuration of GPIO pins

Bit number				31	30	29	28	27	26	25	24	23	22	21	20	19	18	17	16	15	14	13	12	11	10	9	8	7	6	5	4	3	2	1	0
Id																		E	E						D	D	D					C	C	B	A
Reset 0x00000002				**0**	**0**	**0**	**0**	**0**	**0**	**0**	**0**	**0**	**0**	**0**	**0**	**0**	**0**	**0**	**0**	**0**	**0**	**0**	**0**	**0**	**0**	**0**	**0**	**0**	**0**	**0**	**0**	**0**	**0**	**1**	**0**
Id	**RW**	**Field**	**Value Id**	**Value**																															
A	RW	DIR																																	
			Input	0																															
			Output	1																															
B	RW	INPUT																																	
			Connect	0																															
			Disconnect	1																															
C	RW	PULL																																	
			Disabled	0																															
			Pulldown	1																															
			Pullup	3																															
D	RW	DRIVE																																	
			S0S1	0																															
			H0S1	1																															
			S0H1	2																															
			H0H1	3																															
			D0S1	4																															
			D0H1	5																															
			S0D1	6																															
			H0D1	7																															
E	RW	SENSE																																	
			Disabled	0																															
			High	2																															
			Low	3																															

20.3.13 PIN_CNF[3]

Address offset: 0x70C

Configuration of GPIO pins

Bit number				31	30	29	28	27	26	25	24	23	22	21	20	19	18	17	16	15	14	13	12	11	10	9	8	7	6	5	4	3	2	1	0
Id																		E	E						D	D	D					C	C	B	A
Reset 0x00000002				**0**	**0**	**0**	**0**	**0**	**0**	**0**	**0**	**0**	**0**	**0**	**0**	**0**	**0**	**0**	**0**	**0**	**0**	**0**	**0**	**0**	**0**	**0**	**0**	**0**	**0**	**0**	**0**	**0**	**0**	**1**	**0**
Id	**RW**	**Field**	**Value Id**	**Value**																															
A	RW	DIR																																	
			Input	0																															
			Output	1																															
B	RW	INPUT																																	
			Connect	0																															
			Disconnect	1																															
C	RW	PULL																																	
			Disabled	0																															
			Pulldown	1																															
			Pullup	3																															
D	RW	DRIVE																																	
			S0S1	0																															
			H0S1	1																															
			S0H1	2																															
			H0H1	3																															
			D0S1	4																															
			D0H1	5																															
			S0D1	6																															
			H0D1	7																															
E	RW	SENSE																																	
			Disabled	0																															
			High	2																															
			Low	3																															

20.3.14 PIN_CNF[4]

Address offset: 0x710

Configuration of GPIO pins

Bit number				31	30	29	28	27	26	25	24	23	22	21	20	19	18	17	16	15	14	13	12	11	10	9	8	7	6	5	4	3	2	1	0
Id																		E	E						D	D	D					C	C	B	A
Reset 0x00000002				**0**	**0**	**0**	**0**	**0**	**0**	**0**	**0**	**0**	**0**	**0**	**0**	**0**	**0**	**0**	**0**	**0**	**0**	**0**	**0**	**0**	**0**	**0**	**0**	**0**	**0**	**0**	**0**	**0**	**0**	**1**	**0**
Id	**RW**	**Field**	**Value Id**	**Value**																															
A	RW	DIR																																	
			Input	0																															
			Output	1																															
B	RW	INPUT																																	
			Connect	0																															
			Disconnect	1																															
C	RW	PULL																																	
			Disabled	0																															
			Pulldown	1																															
			Pullup	3																															
D	RW	DRIVE																																	
			S0S1	0																															
			H0S1	1																															
			S0H1	2																															
			H0H1	3																															

Bit number				31	30	29	28	27	26	25	24	23	22	21	20	19	18	17	16	15	14	13	12	11	10	9	8	7	6	5	4	3	2	1	0
Id																		E	E						D	D	D					C	C	B	A
Reset 0x00000002				**0**	**0**	**0**	**0**	**0**	**0**	**0**	**0**	**0**	**0**	**0**	**0**	**0**	**0**	**0**	**0**	**0**	**0**	**0**	**0**	**0**	**0**	**0**	**0**	**0**	**0**	**0**	**0**	**0**	**0**	**1**	**0**
Id	**RW**	**Field**		**Value Id**								**Value**																		**Description**						
				D0S1								4																		Disconnect '0' standard '1' (normally used for wired-or connections)						
				D0H1								5																		Disconnect '0', high drive '1' (normally used for wired-or connections)						
				S0D1								6																		Standard '0'. disconnect '1' (normally used for wired-and connections)						
				H0D1								7																		High drive '0', disconnect '1' (normally used for wired-and connections)						
E	RW	SENSE																												Pin sensing mechanism						
				Disabled								0																		Disabled						
				High								2																		Sense for high level						
				Low								3																		Sense for low level						

20.3.15 PIN_CNF[5]

Address offset: 0x714

Configuration of GPIO pins

Bit number				31	30	29	28	27	26	25	24	23	22	21	20	19	18	17	16	15	14	13	12	11	10	9	8	7	6	5	4	3	2	1	0
Id																		E	E						D	D	D					C	C	B	A
Reset 0x00000002				**0**	**0**	**0**	**0**	**0**	**0**	**0**	**0**	**0**	**0**	**0**	**0**	**0**	**0**	**0**	**0**	**0**	**0**	**0**	**0**	**0**	**0**	**0**	**0**	**0**	**0**	**0**	**0**	**0**	**0**	**1**	**0**
Id	**RW**	**Field**		**Value Id**								**Value**																		**Description**						
A	RW	DIR																												Pin direction. Same physical register as DIR register						
				Input								0																		Configure pin as an input pin						
				Output								1																		Configure pin as an output pin						
B	RW	INPUT																												Connect or disconnect input buffer						
				Connect								0																		Connect input buffer						
				Disconnect								1																		Disconnect input buffer						
C	RW	PULL																												Pull configuration						
				Disabled								0																		No pull						
				Pulldown								1																		Pull down on pin						
				Pullup								3																		Pull up on pin						
D	RW	DRIVE																												Drive configuration						
				S0S1								0																		Standard '0', standard '1'						
				H0S1								1																		High drive '0', standard '1'						
				S0H1								2																		Standard '0', high drive '1'						
				H0H1								3																		High drive '0', high 'drive '1''						
				D0S1								4																		Disconnect '0' standard '1' (normally used for wired-or connections)						
				D0H1								5																		Disconnect '0', high drive '1' (normally used for wired-or connections)						
				S0D1								6																		Standard '0'. disconnect '1' (normally used for wired-and connections)						
				H0D1								7																		High drive '0', disconnect '1' (normally used for wired-and connections)						
E	RW	SENSE																												Pin sensing mechanism						
				Disabled								0																		Disabled						
				High								2																		Sense for high level						
				Low								3																		Sense for low level						

20.3.16 PIN_CNF[6]

Address offset: 0x718

Configuration of GPIO pins

Bit number				31	30	29	28	27	26	25	24	23	22	21	20	19	18	17	16	15	14	13	12	11	10	9	8	7	6	5	4	3	2	1	0
Id																		E	E						D	D	D					C	C	B	A
Reset 0x00000002				**0**	**0**	**0**	**0**	**0**	**0**	**0**	**0**	**0**	**0**	**0**	**0**	**0**	**0**	**0**	**0**	**0**	**0**	**0**	**0**	**0**	**0**	**0**	**0**	**0**	**0**	**0**	**0**	**0**	**0**	**1**	**0**
Id	**RW**	**Field**	**Value Id**	**Value**																															
A	RW	DIR																																	
			Input	0																															
			Output	1																															
B	RW	INPUT																																	
			Connect	0																															
			Disconnect	1																															
C	RW	PULL																																	
			Disabled	0																															
			Pulldown	1																															
			Pullup	3																															
D	RW	DRIVE																																	
			S0S1	0																															
			H0S1	1																															
			S0H1	2																															
			H0H1	3																															
			D0S1	4																															
			D0H1	5																															
			S0D1	6																															
			H0D1	7																															
E	RW	SENSE																																	
			Disabled	0																															
			High	2																															
			Low	3																															

20.3.17 PIN_CNF[7]

Address offset: 0x71C

Configuration of GPIO pins

Bit number				31	30	29	28	27	26	25	24	23	22	21	20	19	18	17	16	15	14	13	12	11	10	9	8	7	6	5	4	3	2	1	0
Id																		E	E						D	D	D					C	C	B	A
Reset 0x00000002				**0**	**0**	**0**	**0**	**0**	**0**	**0**	**0**	**0**	**0**	**0**	**0**	**0**	**0**	**0**	**0**	**0**	**0**	**0**	**0**	**0**	**0**	**0**	**0**	**0**	**0**	**0**	**0**	**0**	**0**	**1**	**0**
Id	**RW**	**Field**	**Value Id**	**Value**																															
A	RW	DIR																																	
			Input	0																															
			Output	1																															
B	RW	INPUT																																	
			Connect	0																															
			Disconnect	1																															
C	RW	PULL																																	
			Disabled	0																															
			Pulldown	1																															
			Pullup	3																															
D	RW	DRIVE																																	
			S0S1	0																															
			H0S1	1																															
			S0H1	2																															
			H0H1	3																															
			D0S1	4																															

Bit number				31	30	29	28	27	26	25	24	23	22	21	20	19	18	17	16	15	14	13	12	11	10	9	8	7	6	5	4	3	2	1	0
Id																		E	E						D	D	D					C	C	B	A
Reset 0x00000002				**0**	**0**	**0**	**0**	**0**	**0**	**0**	**0**	**0**	**0**	**0**	**0**	**0**	**0**	**0**	**0**	**0**	**0**	**0**	**0**	**0**	**0**	**0**	**0**	**0**	**0**	**0**	**0**	**0**	**0**	**1**	**0**
Id	**RW**	**Field**	**Value Id**	**Value**																															
			D0H1	5																															
			S0D1	6																															
			H0D1	7																															
E	RW	SENSE																																	
			Disabled	0																															
			High	2																															
			Low	3																															

20.3.18 PIN_CNF[8]

Address offset: 0x720

Configuration of GPIO pins

Bit number				31	30	29	28	27	26	25	24	23	22	21	20	19	18	17	16	15	14	13	12	11	10	9	8	7	6	5	4	3	2	1	0
Id																		E	E						D	D	D					C	C	B	A
Reset 0x00000002				**0**	**0**	**0**	**0**	**0**	**0**	**0**	**0**	**0**	**0**	**0**	**0**	**0**	**0**	**0**	**0**	**0**	**0**	**0**	**0**	**0**	**0**	**0**	**0**	**0**	**0**	**0**	**0**	**0**	**0**	**1**	**0**
Id	**RW**	**Field**	**Value Id**	**Value**																															
A	RW	DIR																																	
			Input	0																															
			Output	1																															
B	RW	INPUT																																	
			Connect	0																															
			Disconnect	1																															
C	RW	PULL																																	
			Disabled	0																															
			Pulldown	1																															
			Pullup	3																															
D	RW	DRIVE																																	
			S0S1	0																															
			H0S1	1																															
			S0H1	2																															
			H0H1	3																															
			D0S1	4																															
			D0H1	5																															
			S0D1	6																															
			H0D1	7																															
E	RW	SENSE																																	
			Disabled	0																															
			High	2																															
			Low	3																															

20.3.19 PIN_CNF[9]

Address offset: 0x724

Configuration of GPIO pins

Bit number				31	30	29	28	27	26	25	24	23	22	21	20	19	18	17	16	15	14	13	12	11	10	9	8	7	6	5	4	3	2	1	0
Id																		E	E						D	D	D					C	C	B	A
Reset 0x00000002				**0**	**0**	**0**	**0**	**0**	**0**	**0**	**0**	**0**	**0**	**0**	**0**	**0**	**0**	**0**	**0**	**0**	**0**	**0**	**0**	**0**	**0**	**0**	**0**	**0**	**0**	**0**	**0**	**0**	**0**	**1**	**0**
Id	**RW**	**Field**	**Value Id**	**Value**																															
A	RW	DIR																																	
			Input	0																															
			Output	1																															
B	RW	INPUT																																	
			Connect	0																															
			Disconnect	1																															
C	RW	PULL																																	
			Disabled	0																															
			Pulldown	1																															
			Pullup	3																															
D	RW	DRIVE																																	
			S0S1	0																															
			H0S1	1																															
			S0H1	2																															
			H0H1	3																															
			D0S1	4																															
			D0H1	5																															
			S0D1	6																															
			H0D1	7																															
E	RW	SENSE																																	
			Disabled	0																															
			High	2																															
			Low	3																															

20.3.20 PIN_CNF[10]

Address offset: 0x728

Configuration of GPIO pins

Bit number				31	30	29	28	27	26	25	24	23	22	21	20	19	18	17	16	15	14	13	12	11	10	9	8	7	6	5	4	3	2	1	0
Id																		E	E						D	D	D					C	C	B	A
Reset 0x00000002				**0**	**0**	**0**	**0**	**0**	**0**	**0**	**0**	**0**	**0**	**0**	**0**	**0**	**0**	**0**	**0**	**0**	**0**	**0**	**0**	**0**	**0**	**0**	**0**	**0**	**0**	**0**	**0**	**0**	**0**	**1**	**0**
Id	**RW**	**Field**	**Value Id**	**Value**																															
A	RW	DIR																																	
			Input	0																															
			Output	1																															
B	RW	INPUT																																	
			Connect	0																															
			Disconnect	1																															
C	RW	PULL																																	
			Disabled	0																															
			Pulldown	1																															
			Pullup	3																															
D	RW	DRIVE																																	
			S0S1	0																															
			H0S1	1																															
			S0H1	2																															
			H0H1	3																															
			D0S1	4																															

Bit number				31	30	29	28	27	26	25	24	23	22	21	20	19	18	17	16	15	14	13	12	11	10	9	8	7	6	5	4	3	2	1	0
Id																		E	E						D	D	D					C	C	B	A
Reset 0x00000002				**0**	**0**	**0**	**0**	**0**	**0**	**0**	**0**	**0**	**0**	**0**	**0**	**0**	**0**	**0**	**0**	**0**	**0**	**0**	**0**	**0**	**0**	**0**	**0**	**0**	**0**	**0**	**0**	**0**	**0**	**1**	**0**
Id	**RW**	**Field**	**Value Id**	**Value**																															
			D0H1	5																															
			S0D1	6																															
			H0D1	7																															
E	RW	SENSE																																	
			Disabled	0																															
			High	2																															
			Low	3																															

20.3.21 PIN_CNF[11]

Address offset: 0x72C

Configuration of GPIO pins

Bit number				31	30	29	28	27	26	25	24	23	22	21	20	19	18	17	16	15	14	13	12	11	10	9	8	7	6	5	4	3	2	1	0
Id																		E	E						D	D	D					C	C	B	A
Reset 0x00000002				**0**	**0**	**0**	**0**	**0**	**0**	**0**	**0**	**0**	**0**	**0**	**0**	**0**	**0**	**0**	**0**	**0**	**0**	**0**	**0**	**0**	**0**	**0**	**0**	**0**	**0**	**0**	**0**	**0**	**0**	**1**	**0**
Id	**RW**	**Field**	**Value Id**	**Value**																															
A	RW	DIR																																	
			Input	0																															
			Output	1																															
B	RW	INPUT																																	
			Connect	0																															
			Disconnect	1																															
C	RW	PULL																																	
			Disabled	0																															
			Pulldown	1																															
			Pullup	3																															
D	RW	DRIVE																																	
			S0S1	0																															
			H0S1	1																															
			S0H1	2																															
			H0H1	3																															
			D0S1	4																															
			D0H1	5																															
			S0D1	6																															
			H0D1	7																															
E	RW	SENSE																																	
			Disabled	0																															
			High	2																															
			Low	3																															

20.3.22 PIN_CNF[12]

Address offset: 0x730

Configuration of GPIO pins

Bit number				31	30	29	28	27	26	25	24	23	22	21	20	19	18	17	16	15	14	13	12	11	10	9	8	7	6	5	4	3	2	1	0
Id																		E	E						D	D	D					C	C	B	A
Reset 0x00000002				**0**	**0**	**0**	**0**	**0**	**0**	**0**	**0**	**0**	**0**	**0**	**0**	**0**	**0**	**0**	**0**	**0**	**0**	**0**	**0**	**0**	**0**	**0**	**0**	**0**	**0**	**0**	**0**	**0**	**0**	**1**	**0**
Id	**RW**	**Field**	**Value Id**	**Value**																															
A	RW	DIR																																	
			Input	0																															
			Output	1																															
B	RW	INPUT																																	
			Connect	0																															
			Disconnect	1																															
C	RW	PULL																																	
			Disabled	0																															
			Pulldown	1																															
			Pullup	3																															
D	RW	DRIVE																																	
			S0S1	0																															
			H0S1	1																															
			S0H1	2																															
			H0H1	3																															
			D0S1	4																															
			D0H1	5																															
			S0D1	6																															
			H0D1	7																															
E	RW	SENSE																																	
			Disabled	0																															
			High	2																															
			Low	3																															

20.3.23 PIN_CNF[13]

Address offset: 0x734

Configuration of GPIO pins

Bit number				31	30	29	28	27	26	25	24	23	22	21	20	19	18	17	16	15	14	13	12	11	10	9	8	7	6	5	4	3	2	1	0
Id																		E	E						D	D	D					C	C	B	A
Reset 0x00000002				**0**	**0**	**0**	**0**	**0**	**0**	**0**	**0**	**0**	**0**	**0**	**0**	**0**	**0**	**0**	**0**	**0**	**0**	**0**	**0**	**0**	**0**	**0**	**0**	**0**	**0**	**0**	**0**	**0**	**0**	**1**	**0**
Id	**RW**	**Field**	**Value Id**	**Value**																															
A	RW	DIR																																	
			Input	0																															
			Output	1																															
B	RW	INPUT																																	
			Connect	0																															
			Disconnect	1																															
C	RW	PULL																																	
			Disabled	0																															
			Pulldown	1																															
			Pullup	3																															
D	RW	DRIVE																																	
			S0S1	0																															
			H0S1	1																															
			S0H1	2																															
			H0H1	3																															
			D0S1	4																															

Bit number				31	30	29	28	27	26	25	24	23	22	21	20	19	18	17	16	15	14	13	12	11	10	9	8	7	6	5	4	3	2	1	0
Id																		E	E						D	D	D					C	C	B	A
Reset 0x00000002				**0**	**0**	**0**	**0**	**0**	**0**	**0**	**0**	**0**	**0**	**0**	**0**	**0**	**0**	**0**	**0**	**0**	**0**	**0**	**0**	**0**	**0**	**0**	**0**	**0**	**0**	**0**	**0**	**0**	**0**	**1**	**0**
Id	**RW**	**Field**	**Value Id**	**Value**																															
			D0H1	5																															
			S0D1	6																															
			H0D1	7																															
E	RW	SENSE																																	
			Disabled	0																															
			High	2																															
			Low	3																															

20.3.24 PIN_CNF[14]

Address offset: 0x738

Configuration of GPIO pins

Bit number				31	30	29	28	27	26	25	24	23	22	21	20	19	18	17	16	15	14	13	12	11	10	9	8	7	6	5	4	3	2	1	0
Id																		E	E						D	D	D					C	C	B	A
Reset 0x00000002				**0**	**0**	**0**	**0**	**0**	**0**	**0**	**0**	**0**	**0**	**0**	**0**	**0**	**0**	**0**	**0**	**0**	**0**	**0**	**0**	**0**	**0**	**0**	**0**	**0**	**0**	**0**	**0**	**0**	**0**	**1**	**0**
Id	**RW**	**Field**	**Value Id**	**Value**																															
A	RW	DIR																																	
			Input	0																															
			Output	1																															
B	RW	INPUT																																	
			Connect	0																															
			Disconnect	1																															
C	RW	PULL																																	
			Disabled	0																															
			Pulldown	1																															
			Pullup	3																															
D	RW	DRIVE																																	
			S0S1	0																															
			H0S1	1																															
			S0H1	2																															
			H0H1	3																															
			D0S1	4																															
			D0H1	5																															
			S0D1	6																															
			H0D1	7																															
E	RW	SENSE																																	
			Disabled	0																															
			High	2																															
			Low	3																															

20.3.25 PIN_CNF[15]

Address offset: 0x73C

Configuration of GPIO pins

Bit number				31	30	29	28	27	26	25	24	23	22	21	20	19	18	17	16	15	14	13	12	11	10	9	8	7	6	5	4	3	2	1	0
Id																		E	E						D	D	D					C	C	B	A
Reset 0x00000002				**0**	**0**	**0**	**0**	**0**	**0**	**0**	**0**	**0**	**0**	**0**	**0**	**0**	**0**	**0**	**0**	**0**	**0**	**0**	**0**	**0**	**0**	**0**	**0**	**0**	**0**	**0**	**0**	**0**	**0**	**1**	**0**
Id	**RW**	**Field**	**Value Id**	**Value**																															
A	RW	DIR																																	
			Input	0																															
			Output	1																															
B	RW	INPUT																																	
			Connect	0																															
			Disconnect	1																															
C	RW	PULL																																	
			Disabled	0																															
			Pulldown	1																															
			Pullup	3																															
D	RW	DRIVE																																	
			S0S1	0																															
			H0S1	1																															
			S0H1	2																															
			H0H1	3																															
			D0S1	4																															
			D0H1	5																															
			S0D1	6																															
			H0D1	7																															
E	RW	SENSE																																	
			Disabled	0																															
			High	2																															
			Low	3																															

20.3.26 PIN_CNF[16]

Address offset: 0x740

Configuration of GPIO pins

Bit number				31	30	29	28	27	26	25	24	23	22	21	20	19	18	17	16	15	14	13	12	11	10	9	8	7	6	5	4	3	2	1	0
Id																		E	E						D	D	D					C	C	B	A
Reset 0x00000002				**0**	**0**	**0**	**0**	**0**	**0**	**0**	**0**	**0**	**0**	**0**	**0**	**0**	**0**	**0**	**0**	**0**	**0**	**0**	**0**	**0**	**0**	**0**	**0**	**0**	**0**	**0**	**0**	**0**	**0**	**1**	**0**
Id	**RW**	**Field**	**Value Id**	**Value**																															
A	RW	DIR																																	
			Input	0																															
			Output	1																															
B	RW	INPUT																																	
			Connect	0																															
			Disconnect	1																															
C	RW	PULL																																	
			Disabled	0																															
			Pulldown	1																															
			Pullup	3																															
D	RW	DRIVE																																	
			S0S1	0																															
			H0S1	1																															
			S0H1	2																															
			H0H1	3																															
			D0S1	4																															

Bit number				31	30	29	28	27	26	25	24	23	22	21	20	19	18	17	16	15	14	13	12	11	10	9	8	7	6	5	4	3	2	1	0
Id																		E	E						D	D	D					C	C	B	A
Reset 0x00000002				**0**	**0**	**0**	**0**	**0**	**0**	**0**	**0**	**0**	**0**	**0**	**0**	**0**	**0**	**0**	**0**	**0**	**0**	**0**	**0**	**0**	**0**	**0**	**0**	**0**	**0**	**0**	**0**	**0**	**0**	**1**	**0**
Id	**RW**	**Field**	**Value Id**	**Value**																															
			D0H1	5																															
			S0D1	6																															
			H0D1	7																															
E	RW	SENSE																																	
			Disabled	0																															
			High	2																															
			Low	3																															

20.3.27 PIN_CNF[17]

Address offset: 0x744

Configuration of GPIO pins

Bit number				31	30	29	28	27	26	25	24	23	22	21	20	19	18	17	16	15	14	13	12	11	10	9	8	7	6	5	4	3	2	1	0
Id																		E	E						D	D	D					C	C	B	A
Reset 0x00000002				**0**	**0**	**0**	**0**	**0**	**0**	**0**	**0**	**0**	**0**	**0**	**0**	**0**	**0**	**0**	**0**	**0**	**0**	**0**	**0**	**0**	**0**	**0**	**0**	**0**	**0**	**0**	**0**	**0**	**0**	**1**	**0**
Id	**RW**	**Field**	**Value Id**	**Value**																															
A	RW	DIR																																	
			Input	0																															
			Output	1																															
B	RW	INPUT																																	
			Connect	0																															
			Disconnect	1																															
C	RW	PULL																																	
			Disabled	0																															
			Pulldown	1																															
			Pullup	3																															
D	RW	DRIVE																																	
			S0S1	0																															
			H0S1	1																															
			S0H1	2																															
			H0H1	3																															
			D0S1	4																															
			D0H1	5																															
			S0D1	6																															
			H0D1	7																															
E	RW	SENSE																																	
			Disabled	0																															
			High	2																															
			Low	3																															

20.3.28 PIN_CNF[18]

Address offset: 0x748

Configuration of GPIO pins

Bit number				31	30	29	28	27	26	25	24	23	22	21	20	19	18	17	16	15	14	13	12	11	10	9	8	7	6	5	4	3	2	1	0
Id																		E	E						D	D	D					C	C	B	A
Reset 0x00000002				**0**	**0**	**0**	**0**	**0**	**0**	**0**	**0**	**0**	**0**	**0**	**0**	**0**	**0**	**0**	**0**	**0**	**0**	**0**	**0**	**0**	**0**	**0**	**0**	**0**	**0**	**0**	**0**	**0**	**0**	**1**	**0**
Id	**RW**	**Field**	**Value Id**	**Value**																															
A	RW	DIR																																	
			Input	0																															
			Output	1																															
B	RW	INPUT																																	
			Connect	0																															
			Disconnect	1																															
C	RW	PULL																																	
			Disabled	0																															
			Pulldown	1																															
			Pullup	3																															
D	RW	DRIVE																																	
			S0S1	0																															
			H0S1	1																															
			S0H1	2																															
			H0H1	3																															
			D0S1	4																															
			D0H1	5																															
			S0D1	6																															
			H0D1	7																															
E	RW	SENSE																																	
			Disabled	0																															
			High	2																															
			Low	3																															

20.3.29 PIN_CNF[19]

Address offset: 0x74C

Configuration of GPIO pins

Bit number				31	30	29	28	27	26	25	24	23	22	21	20	19	18	17	16	15	14	13	12	11	10	9	8	7	6	5	4	3	2	1	0
Id																		E	E						D	D	D					C	C	B	A
Reset 0x00000002				**0**	**0**	**0**	**0**	**0**	**0**	**0**	**0**	**0**	**0**	**0**	**0**	**0**	**0**	**0**	**0**	**0**	**0**	**0**	**0**	**0**	**0**	**0**	**0**	**0**	**0**	**0**	**0**	**0**	**0**	**1**	**0**
Id	**RW**	**Field**	**Value Id**	**Value**																															
A	RW	DIR																																	
			Input	0																															
			Output	1																															
B	RW	INPUT																																	
			Connect	0																															
			Disconnect	1																															
C	RW	PULL																																	
			Disabled	0																															
			Pulldown	1																															
			Pullup	3																															
D	RW	DRIVE																																	
			S0S1	0																															
			H0S1	1																															
			S0H1	2																															
			H0H1	3																															
			D0S1	4																															

Bit number				31	30	29	28	27	26	25	24	23	22	21	20	19	18	17	16	15	14	13	12	11	10	9	8	7	6	5	4	3	2	1	0
Id																		E	E						D	D	D					C	C	B	A
Reset 0x00000002				**0**	**0**	**0**	**0**	**0**	**0**	**0**	**0**	**0**	**0**	**0**	**0**	**0**	**0**	**0**	**0**	**0**	**0**	**0**	**0**	**0**	**0**	**0**	**0**	**0**	**0**	**0**	**0**	**0**	**0**	**1**	**0**
Id	**RW**	**Field**	**Value Id**	**Value**																															
			D0H1	5																															
			S0D1	6																															
			H0D1	7																															
E	RW	SENSE																																	
			Disabled	0																															
			High	2																															
			Low	3																															

20.3.30 PIN_CNF[20]

Address offset: 0x750

Configuration of GPIO pins

Bit number				31	30	29	28	27	26	25	24	23	22	21	20	19	18	17	16	15	14	13	12	11	10	9	8	7	6	5	4	3	2	1	0
Id																		E	E						D	D	D					C	C	B	A
Reset 0x00000002				**0**	**0**	**0**	**0**	**0**	**0**	**0**	**0**	**0**	**0**	**0**	**0**	**0**	**0**	**0**	**0**	**0**	**0**	**0**	**0**	**0**	**0**	**0**	**0**	**0**	**0**	**0**	**0**	**0**	**0**	**1**	**0**
Id	**RW**	**Field**	**Value Id**	**Value**																															
A	RW	DIR																																	
			Input	0																															
			Output	1																															
B	RW	INPUT																																	
			Connect	0																															
			Disconnect	1																															
C	RW	PULL																																	
			Disabled	0																															
			Pulldown	1																															
			Pullup	3																															
D	RW	DRIVE																																	
			S0S1	0																															
			H0S1	1																															
			S0H1	2																															
			H0H1	3																															
			D0S1	4																															
			D0H1	5																															
			S0D1	6																															
			H0D1	7																															
E	RW	SENSE																																	
			Disabled	0																															
			High	2																															
			Low	3																															

20.3.31 PIN_CNF[21]

Address offset: 0x754

Configuration of GPIO pins

Bit number				31	30	29	28	27	26	25	24	23	22	21	20	19	18	17	16	15	14	13	12	11	10	9	8	7	6	5	4	3	2	1	0
Id																		E	E						D	D	D					C	C	B	A
Reset 0x00000002				**0**	**0**	**0**	**0**	**0**	**0**	**0**	**0**	**0**	**0**	**0**	**0**	**0**	**0**	**0**	**0**	**0**	**0**	**0**	**0**	**0**	**0**	**0**	**0**	**0**	**0**	**0**	**0**	**0**	**0**	**1**	**0**
Id	**RW**	**Field**	**Value Id**	**Value**																															
A	RW	DIR																																	
			Input	0																															
			Output	1																															
B	RW	INPUT																																	
			Connect	0																															
			Disconnect	1																															
C	RW	PULL																																	
			Disabled	0																															
			Pulldown	1																															
			Pullup	3																															
D	RW	DRIVE																																	
			S0S1	0																															
			H0S1	1																															
			S0H1	2																															
			H0H1	3																															
			D0S1	4																															
			D0H1	5																															
			S0D1	6																															
			H0D1	7																															
E	RW	SENSE																																	
			Disabled	0																															
			High	2																															
			Low	3																															

20.3.32 PIN_CNF[22]

Address offset: 0x758

Configuration of GPIO pins

Bit number				31	30	29	28	27	26	25	24	23	22	21	20	19	18	17	16	15	14	13	12	11	10	9	8	7	6	5	4	3	2	1	0
Id																		E	E						D	D	D					C	C	B	A
Reset 0x00000002				**0**	**0**	**0**	**0**	**0**	**0**	**0**	**0**	**0**	**0**	**0**	**0**	**0**	**0**	**0**	**0**	**0**	**0**	**0**	**0**	**0**	**0**	**0**	**0**	**0**	**0**	**0**	**0**	**0**	**0**	**1**	**0**
Id	**RW**	**Field**	**Value Id**	**Value**																															
A	RW	DIR																																	
			Input	0																															
			Output	1																															
B	RW	INPUT																																	
			Connect	0																															
			Disconnect	1																															
C	RW	PULL																																	
			Disabled	0																															
			Pulldown	1																															
			Pullup	3																															
D	RW	DRIVE																																	
			S0S1	0																															
			H0S1	1																															
			S0H1	2																															
			H0H1	3																															
			D0S1	4																															

Bit number				31	30	29	28	27	26	25	24	23	22	21	20	19	18	17	16	15	14	13	12	11	10	9	8	7	6	5	4	3	2	1	0
Id																		E	E						D	D	D					C	C	B	A
Reset 0x00000002				**0**	**0**	**0**	**0**	**0**	**0**	**0**	**0**	**0**	**0**	**0**	**0**	**0**	**0**	**0**	**0**	**0**	**0**	**0**	**0**	**0**	**0**	**0**	**0**	**0**	**0**	**0**	**0**	**0**	**0**	**1**	**0**
Id	**RW**	**Field**	**Value Id**	**Value**																															
			D0H1	5																															
			S0D1	6																															
			H0D1	7																															
E	RW	SENSE																																	
			Disabled	0																															
			High	2																															
			Low	3																															

20.3.33 PIN_CNF[23]

Address offset: 0x75C

Configuration of GPIO pins

Bit number				31	30	29	28	27	26	25	24	23	22	21	20	19	18	17	16	15	14	13	12	11	10	9	8	7	6	5	4	3	2	1	0
Id																		E	E						D	D	D					C	C	B	A
Reset 0x00000002				**0**	**0**	**0**	**0**	**0**	**0**	**0**	**0**	**0**	**0**	**0**	**0**	**0**	**0**	**0**	**0**	**0**	**0**	**0**	**0**	**0**	**0**	**0**	**0**	**0**	**0**	**0**	**0**	**0**	**0**	**1**	**0**
Id	**RW**	**Field**	**Value Id**	**Value**																															
A	RW	DIR																																	
			Input	0																															
			Output	1																															
B	RW	INPUT																																	
			Connect	0																															
			Disconnect	1																															
C	RW	PULL																																	
			Disabled	0																															
			Pulldown	1																															
			Pullup	3																															
D	RW	DRIVE																																	
			S0S1	0																															
			H0S1	1																															
			S0H1	2																															
			H0H1	3																															
			D0S1	4																															
			D0H1	5																															
			S0D1	6																															
			H0D1	7																															
E	RW	SENSE																																	
			Disabled	0																															
			High	2																															
			Low	3																															

20.3.34 PIN_CNF[24]

Address offset: 0x760

Configuration of GPIO pins

Bit number				31	30	29	28	27	26	25	24	23	22	21	20	19	18	17	16	15	14	13	12	11	10	9	8	7	6	5	4	3	2	1	0
Id																		E	E						D	D	D					C	C	B	A
Reset 0x00000002				**0**	**0**	**0**	**0**	**0**	**0**	**0**	**0**	**0**	**0**	**0**	**0**	**0**	**0**	**0**	**0**	**0**	**0**	**0**	**0**	**0**	**0**	**0**	**0**	**0**	**0**	**0**	**0**	**0**	**0**	**1**	**0**
Id	**RW**	**Field**	**Value Id**	**Value**																															
A	RW	DIR																																	
			Input	0																															
			Output	1																															
B	RW	INPUT																																	
			Connect	0																															
			Disconnect	1																															
C	RW	PULL																																	
			Disabled	0																															
			Pulldown	1																															
			Pullup	3																															
D	RW	DRIVE																																	
			S0S1	0																															
			H0S1	1																															
			S0H1	2																															
			H0H1	3																															
			D0S1	4																															
			D0H1	5																															
			S0D1	6																															
			H0D1	7																															
E	RW	SENSE																																	
			Disabled	0																															
			High	2																															
			Low	3																															

20.3.35 PIN_CNF[25]

Address offset: 0x764

Configuration of GPIO pins

Bit number				31	30	29	28	27	26	25	24	23	22	21	20	19	18	17	16	15	14	13	12	11	10	9	8	7	6	5	4	3	2	1	0
Id																		E	E						D	D	D					C	C	B	A
Reset 0x00000002				**0**	**0**	**0**	**0**	**0**	**0**	**0**	**0**	**0**	**0**	**0**	**0**	**0**	**0**	**0**	**0**	**0**	**0**	**0**	**0**	**0**	**0**	**0**	**0**	**0**	**0**	**0**	**0**	**0**	**0**	**1**	**0**
Id	**RW**	**Field**	**Value Id**	**Value**																															
A	RW	DIR																																	
			Input	0																															
			Output	1																															
B	RW	INPUT																																	
			Connect	0																															
			Disconnect	1																															
C	RW	PULL																																	
			Disabled	0																															
			Pulldown	1																															
			Pullup	3																															
D	RW	DRIVE																																	
			S0S1	0																															
			H0S1	1																															
			S0H1	2																															
			H0H1	3																															
			D0S1	4																															

Bit number				31	30	29	28	27	26	25	24	23	22	21	20	19	18	17	16	15	14	13	12	11	10	9	8	7	6	5	4	3	2	1	0
Id																		E	E						D	D	D					C	C	B	A
Reset 0x00000002				**0**	**0**	**0**	**0**	**0**	**0**	**0**	**0**	**0**	**0**	**0**	**0**	**0**	**0**	**0**	**0**	**0**	**0**	**0**	**0**	**0**	**0**	**0**	**0**	**0**	**0**	**0**	**0**	**0**	**0**	**1**	**0**
Id	**RW**	**Field**	**Value Id**	**Value**																															
			D0H1	5																															
			S0D1	6																															
			H0D1	7																															
E	RW	SENSE																																	
			Disabled	0																															
			High	2																															
			Low	3																															

20.3.36 PIN_CNF[26]

Address offset: 0x768

Configuration of GPIO pins

Bit number				31	30	29	28	27	26	25	24	23	22	21	20	19	18	17	16	15	14	13	12	11	10	9	8	7	6	5	4	3	2	1	0
Id																		E	E						D	D	D					C	C	B	A
Reset 0x00000002				**0**	**0**	**0**	**0**	**0**	**0**	**0**	**0**	**0**	**0**	**0**	**0**	**0**	**0**	**0**	**0**	**0**	**0**	**0**	**0**	**0**	**0**	**0**	**0**	**0**	**0**	**0**	**0**	**0**	**0**	**1**	**0**
Id	**RW**	**Field**	**Value Id**	**Value**																															
A	RW	DIR																																	
			Input	0																															
			Output	1																															
B	RW	INPUT																																	
			Connect	0																															
			Disconnect	1																															
C	RW	PULL																																	
			Disabled	0																															
			Pulldown	1																															
			Pullup	3																															
D	RW	DRIVE																																	
			S0S1	0																															
			H0S1	1																															
			S0H1	2																															
			H0H1	3																															
			D0S1	4																															
			D0H1	5																															
			S0D1	6																															
			H0D1	7																															
E	RW	SENSE																																	
			Disabled	0																															
			High	2																															
			Low	3																															

20.3.37 PIN_CNF[27]

Address offset: 0x76C

Configuration of GPIO pins

Bit number				31	30	29	28	27	26	25	24	23	22	21	20	19	18	17	16	15	14	13	12	11	10	9	8	7	6	5	4	3	2	1	0
Id																		E	E						D	D	D					C	C	B	A
Reset 0x00000002				**0**	**0**	**0**	**0**	**0**	**0**	**0**	**0**	**0**	**0**	**0**	**0**	**0**	**0**	**0**	**0**	**0**	**0**	**0**	**0**	**0**	**0**	**0**	**0**	**0**	**0**	**0**	**0**	**0**	**0**	**1**	**0**
Id	**RW**	**Field**	**Value Id**	**Value**																															
A	RW	DIR																																	
			Input	0																															
			Output	1																															
B	RW	INPUT																																	
			Connect	0																															
			Disconnect	1																															
C	RW	PULL																																	
			Disabled	0																															
			Pulldown	1																															
			Pullup	3																															
D	RW	DRIVE																																	
			S0S1	0																															
			H0S1	1																															
			S0H1	2																															
			H0H1	3																															
			D0S1	4																															
			D0H1	5																															
			S0D1	6																															
			H0D1	7																															
E	RW	SENSE																																	
			Disabled	0																															
			High	2																															
			Low	3																															

20.3.38 PIN_CNF[28]

Address offset: 0x770

Configuration of GPIO pins

Bit number				31	30	29	28	27	26	25	24	23	22	21	20	19	18	17	16	15	14	13	12	11	10	9	8	7	6	5	4	3	2	1	0
Id																		E	E						D	D	D					C	C	B	A
Reset 0x00000002				**0**	**0**	**0**	**0**	**0**	**0**	**0**	**0**	**0**	**0**	**0**	**0**	**0**	**0**	**0**	**0**	**0**	**0**	**0**	**0**	**0**	**0**	**0**	**0**	**0**	**0**	**0**	**0**	**0**	**0**	**1**	**0**
Id	**RW**	**Field**	**Value Id**	**Value**																															
A	RW	DIR																																	
			Input	0																															
			Output	1																															
B	RW	INPUT																																	
			Connect	0																															
			Disconnect	1																															
C	RW	PULL																																	
			Disabled	0																															
			Pulldown	1																															
			Pullup	3																															
D	RW	DRIVE																																	
			S0S1	0																															
			H0S1	1																															
			S0H1	2																															
			H0H1	3																															
			D0S1	4																															

Bit number				31	30	29	28	27	26	25	24	23	22	21	20	19	18	17	16	15	14	13	12	11	10	9	8	7	6	5	4	3	2	1	0
Id																		E	E						D	D	D					C	C	B	A
Reset 0x00000002				**0**	**0**	**0**	**0**	**0**	**0**	**0**	**0**	**0**	**0**	**0**	**0**	**0**	**0**	**0**	**0**	**0**	**0**	**0**	**0**	**0**	**0**	**0**	**0**	**0**	**0**	**0**	**0**	**0**	**0**	**1**	**0**
Id	**RW**	**Field**	**Value Id**	**Value**																															
			D0H1	5																															
			S0D1	6																															
			H0D1	7																															
E	RW	SENSE																																	
			Disabled	0																															
			High	2																															
			Low	3																															

20.3.39 PIN_CNF[29]

Address offset: 0x774

Configuration of GPIO pins

Bit number				31	30	29	28	27	26	25	24	23	22	21	20	19	18	17	16	15	14	13	12	11	10	9	8	7	6	5	4	3	2	1	0
Id																		E	E						D	D	D					C	C	B	A
Reset 0x00000002				**0**	**0**	**0**	**0**	**0**	**0**	**0**	**0**	**0**	**0**	**0**	**0**	**0**	**0**	**0**	**0**	**0**	**0**	**0**	**0**	**0**	**0**	**0**	**0**	**0**	**0**	**0**	**0**	**0**	**0**	**1**	**0**
Id	**RW**	**Field**	**Value Id**	**Value**																															
A	RW	DIR																																	
			Input	0																															
			Output	1																															
B	RW	INPUT																																	
			Connect	0																															
			Disconnect	1																															
C	RW	PULL																																	
			Disabled	0																															
			Pulldown	1																															
			Pullup	3																															
D	RW	DRIVE																																	
			S0S1	0																															
			H0S1	1																															
			S0H1	2																															
			H0H1	3																															
			D0S1	4																															
			D0H1	5																															
			S0D1	6																															
			H0D1	7																															
E	RW	SENSE																																	
			Disabled	0																															
			High	2																															
			Low	3																															

20.3.40 PIN_CNF[30]

Address offset: 0x778

Configuration of GPIO pins

Bit number				31	30	29	28	27	26	25	24	23	22	21	20	19	18	17	16	15	14	13	12	11	10	9	8	7	6	5	4	3	2	1	0
Id																		E	E						D	D	D					C	C	B	A
Reset 0x00000002				**0**	**0**	**0**	**0**	**0**	**0**	**0**	**0**	**0**	**0**	**0**	**0**	**0**	**0**	**0**	**0**	**0**	**0**	**0**	**0**	**0**	**0**	**0**	**0**	**0**	**0**	**0**	**0**	**0**	**0**	**1**	**0**
Id	**RW**	**Field**	**Value Id**	**Value**																															
A	RW	DIR																																	
			Input	0																															
			Output	1																															
B	RW	INPUT																																	
			Connect	0																															
			Disconnect	1																															
C	RW	PULL																																	
			Disabled	0																															
			Pulldown	1																															
			Pullup	3																															
D	RW	DRIVE																																	
			S0S1	0																															
			H0S1	1																															
			S0H1	2																															
			H0H1	3																															
			D0S1	4																															
			D0H1	5																															
			S0D1	6																															
			H0D1	7																															
E	RW	SENSE																																	
			Disabled	0																															
			High	2																															
			Low	3																															

20.3.41 PIN_CNF[31]

Address offset: 0x77C

Configuration of GPIO pins

Bit number				31	30	29	28	27	26	25	24	23	22	21	20	19	18	17	16	15	14	13	12	11	10	9	8	7	6	5	4	3	2	1	0
Id																		E	E						D	D	D					C	C	B	A
Reset 0x00000002				**0**	**0**	**0**	**0**	**0**	**0**	**0**	**0**	**0**	**0**	**0**	**0**	**0**	**0**	**0**	**0**	**0**	**0**	**0**	**0**	**0**	**0**	**0**	**0**	**0**	**0**	**0**	**0**	**0**	**0**	**1**	**0**
Id	**RW**	**Field**	**Value Id**	**Value**																															
A	RW	DIR																																	
			Input	0																															
			Output	1																															
B	RW	INPUT																																	
			Connect	0																															
			Disconnect	1																															
C	RW	PULL																																	
			Disabled	0																															
			Pulldown	1																															
			Pullup	3																															
D	RW	DRIVE																																	
			S0S1	0																															
			H0S1	1																															
			S0H1	2																															
			H0H1	3																															
			D0S1	4																															

Bit number				31	30	29	28	27	26	25	24	23	22	21	20	19	18	17	16	15	14	13	12	11	10	9	8	7	6	5	4	3	2	1	0
Id																		E	E						D	D	D					C	C	B	A
Reset 0x00000002				**0**	**0**	**0**	**0**	**0**	**0**	**0**	**0**	**0**	**0**	**0**	**0**	**0**	**0**	**0**	**0**	**0**	**0**	**0**	**0**	**0**	**0**	**0**	**0**	**0**	**0**	**0**	**0**	**0**	**0**	**1**	**0**

Id	RW	Field	Value Id	Value	Description
			D0H1	5	Disconnect '0', high drive '1' (normally used for wired-or connections)
			S0D1	6	Standard '0'. disconnect '1' (normally used for wired-and connections)
			H0D1	7	High drive '0', disconnect '1' (normally used for wired-and connections)
E	RW	SENSE			Pin sensing mechanism
			Disabled	0	Disabled
			High	2	Sense for high level
			Low	3	Sense for low level

20.4 Electrical Specification

20.4.1 GPIO Electrical Specification

Symbol	Description	Min.	Typ.	Max.	Units
V_{IH}	Input high voltage	0.7 x VDD		VDD	V
V_{IL}	Input low voltage	VSS		0.3 x VDD	V
$V_{OH,SD}$	Output high voltage, standard drive, 0.5 mA, VDD ≥1.7	VDD-0.4		VDD	V
$V_{OH,HDH}$	Output high voltage, high drive, 5 mA, VDD >= 2.7 V	VDD-0.4		VDD	V
$V_{OH,HDL}$	Output high voltage, high drive, 3 mA, VDD >= 1.7 V	VDD-0.4		VDD	V
$V_{OL,SD}$	Output low voltage, standard drive, 0.5 mA, VDD ≥1.7	VSS		VSS+0.4	V
$V_{OL,HDH}$	Output low voltage, high drive, 5 mA, VDD >= 2.7 V	VSS		VSS+0.4	V
$V_{OL,HDL}$	Output low voltage, high drive, 3 mA, VDD >= 1.7 V	VSS		VSS+0.4	V
$I_{OL,SD}$	Current at VSS+0.4 V, output set low, standard drive, VDD ≥1.7	1	2	4	mA
$I_{OL,HDH}$	Current at VSS+0.4 V, output set low, high drive, VDD >= 2.7 V	6	10	15	mA
$I_{OL,HDL}$	Current at VSS+0.4 V, output set low, high drive, VDD >= 1.7 V	3			mA
$I_{OH,SD}$	Current at VDD-0.4 V, output set high, standard drive, VDD ≥1.7	1	2	4	mA
$I_{OH,HDH}$	Current at VDD-0.4 V, output set high, high drive, VDD >= 2.7 V	6	9	14	mA
$I_{OH,HDL}$	Current at VDD-0.4 V, output set high, high drive, VDD >= 1.7 V	3			mA
$t_{RF,15pF}$	Rise/fall time, low drive mode, 10-90%, 15 pF load[1]		9		ns
$t_{RF,25pF}$	Rise/fall time, low drive mode, 10-90%, 25 pF load[1]		13		ns
$t_{RF,50pF}$	Rise/fall time, low drive mode, 10-90%, 50 pF load[1]		25		ns
$t_{HRF,15pF}$	Rise/Fall time, high drive mode, 10-90%, 15 pF load[1]		4		ns
$t_{HRF,25pF}$	Rise/Fall time, high drive mode, 10-90%, 25 pF load[1]		5		ns
$t_{HRF,50pF}$	Rise/Fall time, high drive mode, 10-90%, 50 pF load[1]		8		ns
R_{PU}	Pull-up resistance	11	13	16	kΩ
R_{PD}	Pull-down resistance	11	13	16	kΩ
C_{PAD}	Pad capacitance		3		pF
C_{PAD_NFC}	Pad capacitance on NFC pads		4		pF
I_{NFC_LEAK}	Leakage current between NFC pads when driven to different states		2	10	µA

The current drawn from the battery when GPIO is active as an output is calculated as follows:

$I_{GPIO}=V_{DD}\ C_{load}\ f$

C_{load} being the load capacitance and “f” is the switching frequency.

[1] Rise and fall times based on simulations

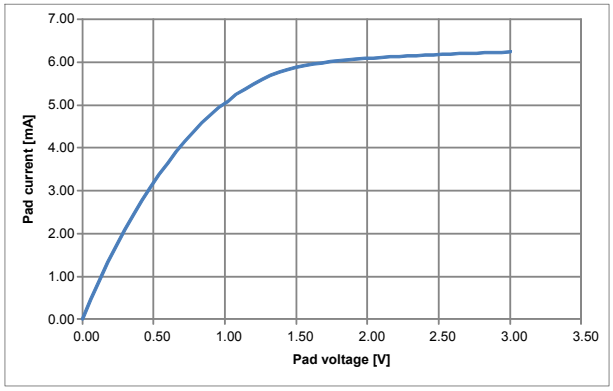

Figure 22: GPIO drive strength vs Voltage, standard drive, VDD = 3.0 V

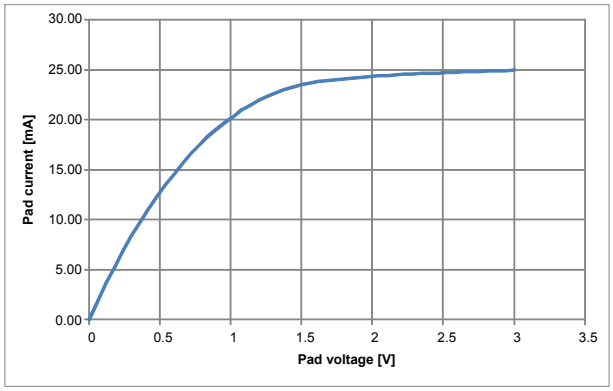

Figure 23: GPIO drive strength vs Voltage, high drive, VDD = 3.0 V

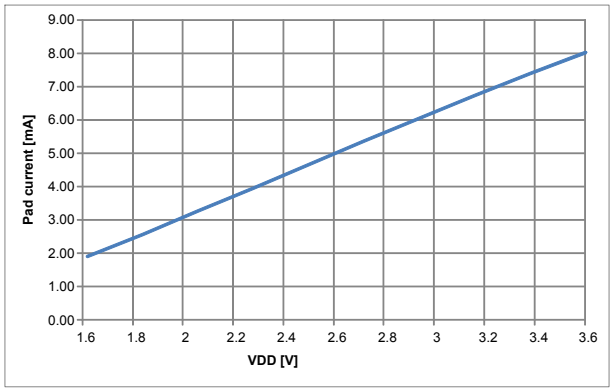

Figure 24: Max sink current vs Voltage, standard drive

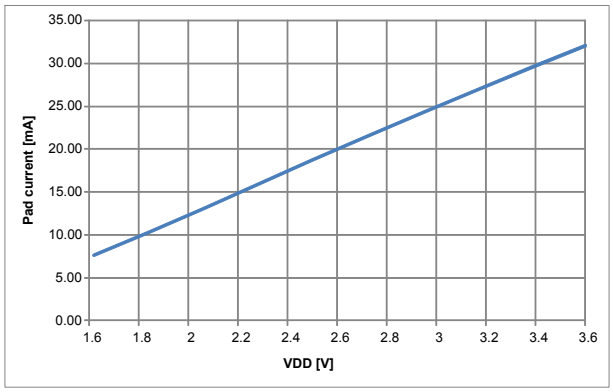

Figure 25: Max sink current vs Voltage, high drive

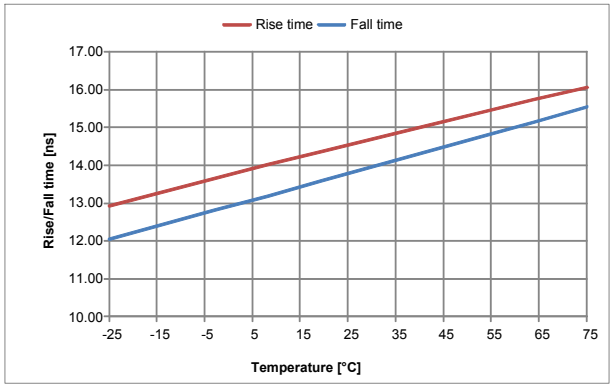

Figure 26: Rise and fall time vs Temperature, 10%-90%, 25pF load capacitance, VDD = 3.0 V

21 GPIOTE — GPIO tasks and events

The GPIO tasks and events (GPIOTE) module provides functionality for accessing GPIO pins using tasks and events. Each GPIOTE channel can be assigned to one pin.

A GPIOTE block enables GPIOs to generate events on pin state change which can be used to carry out tasks through the PPI system. A GPIO can also be driven to change state on system events using the PPI system. Low power detection of pin state changes is possible when in System ON or System OFF.

Table 26: GPIOTE properties

Instance	Number of GPIOTE channels
GPIOTE	8

Up to three tasks can be used in each GPIOTE channel for performing write operations to a pin. Two tasks are fixed (SET and CLR), and one (OUT) is configurable to perform following operations:

- Set
- Clear
- Toggle

An event can be generated in each GPIOTE channel from one of the following input conditions:

- Rising edge
- Falling edge
- Any change

21.1 Pin events and tasks

The GPIOTE module has a number of tasks and events that can be configured to operate on individual GPIO pins.

The tasks (SET[n], CLR[n] and OUT[n]) can be used for writing to individual pins, and the events (IN[n]) can be generated from changes occurring at the inputs of individual pins.

The SET task will set the pin selected in CONFIG[n].PSEL to high.

The CLR task will set the pin low.

The effect of the OUT task on the pin is configurable in CONFIG[n].POLARITY , and can either set the pin high, set it low, or toggle it.

The tasks and events are configured using the CONFIG[n] registers. Every set of SET, CLR and OUT[n] tasks and IN[n] events has one CONFIG[n] register associated with it.

As long as a SET[n], CLR[n] and OUT[n] task or an IN[n] event is configured to control a pin **n**, the pin's output value will only be updated by the GPIOTE module. The pin's output value as specified in the GPIO will therefore be ignored as long as the pin is controlled by GPIOTE. Attempting to write a pin as a normal GPIO pin will have no effect. When the GPIOTE is disconnected from a pin, see MODE field in CONFIG[n] register, the associated pin will get the output and configuration values specified in the GPIO module.

When conflicting tasks are triggered simultaneously (i.e. during the same clock cycle) in one channel, the precedence of the tasks will be as described in *Table 27: Task priorities* on page 154.

Table 27: Task priorities

Priority	Task
1	OUT
2	CLR
3	SET

When setting the CONFIG[n] registers, MODE=Disabled does not have the same effect as MODE=Task and POLARITY=None. In the latter case, a CLR or SET task occurring at the exact same time as OUT will end up with no change on the pin, according to the priorities described in the table above.

When a GPIOTE channel is configured to operate on a pin as a task, the initial value of that pin is configured in the OUTINIT field of CONFIG[n].

21.2 Port event

PORT is an event that can be generated from multiple input pins using the GPIO DETECT signal.

The event will be generated on the rising edge of the DETECT signal. See *GPIO — General purpose input/output* on page 107 for more information about the DETECT signal.

Putting the system into System ON IDLE while DETECT is high will not cause DETECT to wake the system up again. Make sure to clear all DETECT sources before entering sleep. If the LATCH register is used as a source, if any bit in LATCH is still high after clearing all or part of the register (for instance due to one of the PINx.DETECT signal still high), a new rising edge will be generated on DETECT, see *Pin configuration* on page 107.

Trying to put the system to System OFF while DETECT is high will cause a wakeup from System OFF reset.

This feature is always enabled although the peripheral itself appears to be IDLE, that is, no clocks or other power intensive infrastructure have to be requested to keep this feature enabled. This feature can therefore be used to wake up the CPU from a WFI or WFE type sleep in System ON with all peripherals and the CPU idle, that is, lowest power consumption in System ON mode.

In order to prevent spurious interrupts from the PORT event while configuring the sources, the user shall first disable interrupts on the PORT event (through INTENCLR.PORT), then configure the sources (PIN_CNF[n].SENSE), clear any potential event that could have occurred during configuration (write '1' to EVENTS_PORT), and finally enable interrupts (through INTENSET.PORT).

21.3 Tasks and events pin configuration

Each GPIOTE channel is associated with one physical GPIO pin through the CONFIG.PSEL field.

When Event mode is selected in CONFIG.MODE, the pin specified by CONFIG.PSEL will be configured as an input, overriding the DIR setting in GPIO. Similarly, when Task mode is selected in CONFIG.MODE, the pin specified by CONFIG.PSEL will be configured as an output overriding the DIR setting and OUT value in GPIO. When Disabled is selected in CONFIG.MODE, the pin specified by CONFIG.PSEL will use its configuration from the PIN[n].CNF registers in GPIO.

Only one GPIOTE channel can be assigned to one physical pin. Failing to do so may result in unpredictable behavior.

21.4 Registers

Table 28: Instances

Base address	Peripheral	Instance	Description	Configuration
0x40006000	GPIOTE	GPIOTE	GPIO tasks and events	

Table 29: Register Overview

Register	Offset	Description
TASKS_OUT[0]	0x000	Task for writing to pin specified in CONFIG[0].PSEL. Action on pin is configured in CONFIG[0].POLARITY.
TASKS_OUT[1]	0x004	Task for writing to pin specified in CONFIG[1].PSEL. Action on pin is configured in CONFIG[1].POLARITY.

Register	Offset	Description
TASKS_OUT[2]	0x008	Task for writing to pin specified in CONFIG[2].PSEL. Action on pin is configured in CONFIG[2].POLARITY.
TASKS_OUT[3]	0x00C	Task for writing to pin specified in CONFIG[3].PSEL. Action on pin is configured in CONFIG[3].POLARITY.
TASKS_OUT[4]	0x010	Task for writing to pin specified in CONFIG[4].PSEL. Action on pin is configured in CONFIG[4].POLARITY.
TASKS_OUT[5]	0x014	Task for writing to pin specified in CONFIG[5].PSEL. Action on pin is configured in CONFIG[5].POLARITY.
TASKS_OUT[6]	0x018	Task for writing to pin specified in CONFIG[6].PSEL. Action on pin is configured in CONFIG[6].POLARITY.
TASKS_OUT[7]	0x01C	Task for writing to pin specified in CONFIG[7].PSEL. Action on pin is configured in CONFIG[7].POLARITY.
TASKS_SET[0]	0x030	Task for writing to pin specified in CONFIG[0].PSEL. Action on pin is to set it high.
TASKS_SET[1]	0x034	Task for writing to pin specified in CONFIG[1].PSEL. Action on pin is to set it high.
TASKS_SET[2]	0x038	Task for writing to pin specified in CONFIG[2].PSEL. Action on pin is to set it high.
TASKS_SET[3]	0x03C	Task for writing to pin specified in CONFIG[3].PSEL. Action on pin is to set it high.
TASKS_SET[4]	0x040	Task for writing to pin specified in CONFIG[4].PSEL. Action on pin is to set it high.
TASKS_SET[5]	0x044	Task for writing to pin specified in CONFIG[5].PSEL. Action on pin is to set it high.
TASKS_SET[6]	0x048	Task for writing to pin specified in CONFIG[6].PSEL. Action on pin is to set it high.
TASKS_SET[7]	0x04C	Task for writing to pin specified in CONFIG[7].PSEL. Action on pin is to set it high.
TASKS_CLR[0]	0x060	Task for writing to pin specified in CONFIG[0].PSEL. Action on pin is to set it low.
TASKS_CLR[1]	0x064	Task for writing to pin specified in CONFIG[1].PSEL. Action on pin is to set it low.
TASKS_CLR[2]	0x068	Task for writing to pin specified in CONFIG[2].PSEL. Action on pin is to set it low.
TASKS_CLR[3]	0x06C	Task for writing to pin specified in CONFIG[3].PSEL. Action on pin is to set it low.
TASKS_CLR[4]	0x070	Task for writing to pin specified in CONFIG[4].PSEL. Action on pin is to set it low.
TASKS_CLR[5]	0x074	Task for writing to pin specified in CONFIG[5].PSEL. Action on pin is to set it low.
TASKS_CLR[6]	0x078	Task for writing to pin specified in CONFIG[6].PSEL. Action on pin is to set it low.
TASKS_CLR[7]	0x07C	Task for writing to pin specified in CONFIG[7].PSEL. Action on pin is to set it low.
EVENTS_IN[0]	0x100	Event generated from pin specified in CONFIG[0].PSEL
EVENTS_IN[1]	0x104	Event generated from pin specified in CONFIG[1].PSEL
EVENTS_IN[2]	0x108	Event generated from pin specified in CONFIG[2].PSEL
EVENTS_IN[3]	0x10C	Event generated from pin specified in CONFIG[3].PSEL
EVENTS_IN[4]	0x110	Event generated from pin specified in CONFIG[4].PSEL
EVENTS_IN[5]	0x114	Event generated from pin specified in CONFIG[5].PSEL
EVENTS_IN[6]	0x118	Event generated from pin specified in CONFIG[6].PSEL
EVENTS_IN[7]	0x11C	Event generated from pin specified in CONFIG[7].PSEL
EVENTS_PORT	0x17C	Event generated from multiple input GPIO pins with SENSE mechanism enabled
INTENSET	0x304	Enable interrupt
INTENCLR	0x308	Disable interrupt
CONFIG[0]	0x510	Configuration for OUT[n], SET[n] and CLR[n] tasks and IN[n] event
CONFIG[1]	0x514	Configuration for OUT[n], SET[n] and CLR[n] tasks and IN[n] event
CONFIG[2]	0x518	Configuration for OUT[n], SET[n] and CLR[n] tasks and IN[n] event
CONFIG[3]	0x51C	Configuration for OUT[n], SET[n] and CLR[n] tasks and IN[n] event
CONFIG[4]	0x520	Configuration for OUT[n], SET[n] and CLR[n] tasks and IN[n] event
CONFIG[5]	0x524	Configuration for OUT[n], SET[n] and CLR[n] tasks and IN[n] event
CONFIG[6]	0x528	Configuration for OUT[n], SET[n] and CLR[n] tasks and IN[n] event
CONFIG[7]	0x52C	Configuration for OUT[n], SET[n] and CLR[n] tasks and IN[n] event

21.4.1 INTENSET

Address offset: 0x304

Enable interrupt

Bit number	31	30	29	28	27	26	25	24	23	22	21	20	19	18	17	16	15	14	13	12	11	10	9	8	7	6	5	4	3	2	1	0
Id	I																								H	G	F	E	D	C	B	A
Reset 0x00000000	**0**	**0**	**0**	**0**	**0**	**0**	**0**	**0**	**0**	**0**	**0**	**0**	**0**	**0**	**0**	**0**	**0**	**0**	**0**	**0**	**0**	**0**	**0**	**0**	**0**	**0**	**0**	**0**	**0**	**0**	**0**	**0**

Id	RW	Field	Value Id	Value	Description
A	RW	IN0			Write '1' to Enable interrupt for IN[0] event

Bit number				31	30	29	28	27	26	25	24	23	22	21	20	19	18	17	16	15	14	13	12	11	10	9	8	7	6	5	4	3	2	1	0
Id				I																								H	G	F	E	D	C	B	A
Reset 0x00000000				**0**	**0**	**0**	**0**	**0**	**0**	**0**	**0**	**0**	**0**	**0**	**0**	**0**	**0**	**0**	**0**	**0**	**0**	**0**	**0**	**0**	**0**	**0**	**0**	**0**	**0**	**0**	**0**	**0**	**0**	**0**	**0**
Id	**RW**	**Field**	**Value Id**	**Value**								**Description**																							
												See *EVENTS_IN[0]*																							
			Set	1								Enable																							
			Disabled	0								Read: Disabled																							
			Enabled	1								Read: Enabled																							
B	RW	IN1										Write '1' to Enable interrupt for IN[1] event See *EVENTS_IN[1]*																							
			Set	1								Enable																							
			Disabled	0								Read: Disabled																							
			Enabled	1								Read: Enabled																							
C	RW	IN2										Write '1' to Enable interrupt for IN[2] event See *EVENTS_IN[2]*																							
			Set	1								Enable																							
			Disabled	0								Read: Disabled																							
			Enabled	1								Read: Enabled																							
D	RW	IN3										Write '1' to Enable interrupt for IN[3] event See *EVENTS_IN[3]*																							
			Set	1								Enable																							
			Disabled	0								Read: Disabled																							
			Enabled	1								Read: Enabled																							
E	RW	IN4										Write '1' to Enable interrupt for IN[4] event See *EVENTS_IN[4]*																							
			Set	1								Enable																							
			Disabled	0								Read: Disabled																							
			Enabled	1								Read: Enabled																							
F	RW	IN5										Write '1' to Enable interrupt for IN[5] event See *EVENTS_IN[5]*																							
			Set	1								Enable																							
			Disabled	0								Read: Disabled																							
			Enabled	1								Read: Enabled																							
G	RW	IN6										Write '1' to Enable interrupt for IN[6] event See *EVENTS_IN[6]*																							
			Set	1								Enable																							
			Disabled	0								Read: Disabled																							
			Enabled	1								Read: Enabled																							
H	RW	IN7										Write '1' to Enable interrupt for IN[7] event See *EVENTS_IN[7]*																							
			Set	1								Enable																							
			Disabled	0								Read: Disabled																							
			Enabled	1								Read: Enabled																							
I	RW	PORT										Write '1' to Enable interrupt for PORT event See *EVENTS_PORT*																							
			Set	1								Enable																							
			Disabled	0								Read: Disabled																							
			Enabled	1								Read: Enabled																							

21.4.2 INTENCLR

Address offset: 0x308

Disable interrupt

Bit number				31	30	29	28	27	26	25	24	23	22	21	20	19	18	17	16	15	14	13	12	11	10	9	8	7	6	5	4	3	2	1	0
Id				I																								H	G	F	E	D	C	B	A
Reset 0x00000000				**0**	**0**	**0**	**0**	**0**	**0**	**0**	**0**	**0**	**0**	**0**	**0**	**0**	**0**	**0**	**0**	**0**	**0**	**0**	**0**	**0**	**0**	**0**	**0**	**0**	**0**	**0**	**0**	**0**	**0**	**0**	**0**
Id	**RW**	**Field**	**Value Id**	**Value**								**Description**																							
A	RW	IN0										Write '1' to Disable interrupt for IN[0] event See *EVENTS_IN[0]*																							
			Clear	1								Disable																							
			Disabled	0								Read: Disabled																							
			Enabled	1								Read: Enabled																							
B	RW	IN1										Write '1' to Disable interrupt for IN[1] event See *EVENTS_IN[1]*																							
			Clear	1								Disable																							
			Disabled	0								Read: Disabled																							
			Enabled	1								Read: Enabled																							
C	RW	IN2										Write '1' to Disable interrupt for IN[2] event See *EVENTS_IN[2]*																							
			Clear	1								Disable																							
			Disabled	0								Read: Disabled																							
			Enabled	1								Read: Enabled																							
D	RW	IN3										Write '1' to Disable interrupt for IN[3] event See *EVENTS_IN[3]*																							
			Clear	1								Disable																							
			Disabled	0								Read: Disabled																							
			Enabled	1								Read: Enabled																							
E	RW	IN4										Write '1' to Disable interrupt for IN[4] event See *EVENTS_IN[4]*																							
			Clear	1								Disable																							
			Disabled	0								Read: Disabled																							
			Enabled	1								Read: Enabled																							
F	RW	IN5										Write '1' to Disable interrupt for IN[5] event See *EVENTS_IN[5]*																							
			Clear	1								Disable																							
			Disabled	0								Read: Disabled																							
			Enabled	1								Read: Enabled																							
G	RW	IN6										Write '1' to Disable interrupt for IN[6] event See *EVENTS_IN[6]*																							
			Clear	1								Disable																							
			Disabled	0								Read: Disabled																							
			Enabled	1								Read: Enabled																							
H	RW	IN7										Write '1' to Disable interrupt for IN[7] event See *EVENTS_IN[7]*																							
			Clear	1								Disable																							
			Disabled	0								Read: Disabled																							
			Enabled	1								Read: Enabled																							
I	RW	PORT										Write '1' to Disable interrupt for PORT event See *EVENTS_PORT*																							
			Clear	1								Disable																							
			Disabled	0								Read: Disabled																							
			Enabled	1								Read: Enabled																							

21.4.3 CONFIG[0]

Address offset: 0x510

Configuration for OUT[n], SET[n] and CLR[n] tasks and IN[n] event

Bit number				31	30	29	28	27	26	25	24	23	22	21	20	19	18	17	16	15	14	13	12	11	10	9	8	7	6	5	4	3	2	1	0
Id															E			D	D				B	B	B	B	B							A	A
Reset 0x00000000				**0**	**0**	**0**	**0**	**0**	**0**	**0**	**0**	**0**	**0**	**0**	**0**	**0**	**0**	**0**	**0**	**0**	**0**	**0**	**0**	**0**	**0**	**0**	**0**	**0**	**0**	**0**	**0**	**0**	**0**	**0**	**0**
Id	**RW**	**Field**	**Value Id**	**Value**											**Description**																						
A	RW	MODE													Mode																						
			Disabled	0											Disabled. Pin specified by PSEL will not be acquired by the GPIOTE module.																						
			Event	1											Event mode The pin specified by PSEL will be configured as an input and the IN[n] event will be generated if operation specified in POLARITY occurs on the pin.																						
			Task	3											Task mode The GPIO specified by PSEL will be configured as an output and triggering the SET[n], CLR[n] or OUT[n] task will perform the operation specified by POLARITY on the pin. When enabled as a task the GPIOTE module will acquire the pin and the pin can no longer be written as a regular output pin from the GPIO module.																						
B	RW	PSEL		[0..31]											GPIO number associated with SET[n], CLR[n] and OUT[n] tasks and IN[n] event																						
D	RW	POLARITY													When In task mode: Operation to be performed on output when OUT[n] task is triggered. When In event mode: Operation on input that shall trigger IN[n] event.																						
			None	0											Task mode: No effect on pin from OUT[n] task. Event mode: no IN[n] event generated on pin activity.																						
			LoToHi	1											Task mode: Set pin from OUT[n] task. Event mode: Generate IN[n] event when rising edge on pin.																						
			HiToLo	2											Task mode: Clear pin from OUT[n] task. Event mode: Generate IN[n] event when falling edge on pin.																						
			Toggle	3											Task mode: Toggle pin from OUT[n]. Event mode: Generate IN[n] when any change on pin.																						
E	RW	OUTINIT													When in task mode: Initial value of the output when the GPIOTE channel is configured. When in event mode: No effect.																						
			Low	0											Task mode: Initial value of pin before task triggering is low																						
			High	1											Task mode: Initial value of pin before task triggering is high																						

21.4.4 CONFIG[1]

Address offset: 0x514

Configuration for OUT[n], SET[n] and CLR[n] tasks and IN[n] event

Bit number				31	30	29	28	27	26	25	24	23	22	21	20	19	18	17	16	15	14	13	12	11	10	9	8	7	6	5	4	3	2	1	0
Id															E			D	D				B	B	B	B	B							A	A
Reset 0x00000000				**0**	**0**	**0**	**0**	**0**	**0**	**0**	**0**	**0**	**0**	**0**	**0**	**0**	**0**	**0**	**0**	**0**	**0**	**0**	**0**	**0**	**0**	**0**	**0**	**0**	**0**	**0**	**0**	**0**	**0**	**0**	**0**
Id	**RW**	**Field**	**Value Id**	**Value**											**Description**																						
A	RW	MODE													Mode																						
			Disabled	0											Disabled. Pin specified by PSEL will not be acquired by the GPIOTE module.																						
			Event	1											Event mode The pin specified by PSEL will be configured as an input and the IN[n] event will be generated if operation specified in POLARITY occurs on the pin.																						
			Task	3											Task mode The GPIO specified by PSEL will be configured as an output and triggering the SET[n], CLR[n] or OUT[n] task will perform the operation specified by POLARITY on the pin. When enabled as a task the GPIOTE module will acquire the pin and the pin can no longer be written as a regular output pin from the GPIO module.																						

Bit number				31	30	29	28	27	26	25	24	23	22	21	20	19	18	17	16	15	14	13	12	11	10	9	8	7	6	5	4	3	2	1	0
Id															E			D	D				B	B	B	B	B							A	A
Reset 0x00000000				**0**	**0**	**0**	**0**	**0**	**0**	**0**	**0**	**0**	**0**	**0**	**0**	**0**	**0**	**0**	**0**	**0**	**0**	**0**	**0**	**0**	**0**	**0**	**0**	**0**	**0**	**0**	**0**	**0**	**0**	**0**	**0**
Id	**RW**	**Field**	**Value Id**	**Value**											**Description**																						
B	RW	PSEL		[0..31]											GPIO number associated with SET[n], CLR[n] and OUT[n] tasks and IN[n] event																					
D	RW	POLARITY													When In task mode: Operation to be performed on output when OUT[n] task is triggered. When In event mode: Operation on input that shall trigger IN[n] event.																					
			None	0											Task mode: No effect on pin from OUT[n] task. Event mode: no IN[n] event generated on pin activity.																					
			LoToHi	1											Task mode: Set pin from OUT[n] task. Event mode: Generate IN[n] event when rising edge on pin.																					
			HiToLo	2											Task mode: Clear pin from OUT[n] task. Event mode: Generate IN[n] event when falling edge on pin.																					
			Toggle	3											Task mode: Toggle pin from OUT[n]. Event mode: Generate IN[n] when any change on pin.																					
E	RW	OUTINIT													When in task mode: Initial value of the output when the GPIOTE channel is configured. When in event mode: No effect.																					
			Low	0											Task mode: Initial value of pin before task triggering is low																					
			High	1											Task mode: Initial value of pin before task triggering is high																					

21.4.5 CONFIG[2]

Address offset: 0x518

Configuration for OUT[n], SET[n] and CLR[n] tasks and IN[n] event

Bit number				31	30	29	28	27	26	25	24	23	22	21	20	19	18	17	16	15	14	13	12	11	10	9	8	7	6	5	4	3	2	1	0
Id															E			D	D				B	B	B	B	B							A	A
Reset 0x00000000				**0**	**0**	**0**	**0**	**0**	**0**	**0**	**0**	**0**	**0**	**0**	**0**	**0**	**0**	**0**	**0**	**0**	**0**	**0**	**0**	**0**	**0**	**0**	**0**	**0**	**0**	**0**	**0**	**0**	**0**	**0**	**0**
Id	**RW**	**Field**	**Value Id**	**Value**											**Description**																						
A	RW	MODE													Mode																					
			Disabled	0											Disabled. Pin specified by PSEL will not be acquired by the GPIOTE module.																					
			Event	1											Event mode The pin specified by PSEL will be configured as an input and the IN[n] event will be generated if operation specified in POLARITY occurs on the pin.																					
			Task	3											Task mode The GPIO specified by PSEL will be configured as an output and triggering the SET[n], CLR[n] or OUT[n] task will perform the operation specified by POLARITY on the pin. When enabled as a task the GPIOTE module will acquire the pin and the pin can no longer be written as a regular output pin from the GPIO module.																					
B	RW	PSEL		[0..31]											GPIO number associated with SET[n], CLR[n] and OUT[n] tasks and IN[n] event																					
D	RW	POLARITY													When In task mode: Operation to be performed on output when OUT[n] task is triggered. When In event mode: Operation on input that shall trigger IN[n] event.																					
			None	0											Task mode: No effect on pin from OUT[n] task. Event mode: no IN[n] event generated on pin activity.																					
			LoToHi	1											Task mode: Set pin from OUT[n] task. Event mode: Generate IN[n] event when rising edge on pin.																					
			HiToLo	2											Task mode: Clear pin from OUT[n] task. Event mode: Generate IN[n] event when falling edge on pin.																					
			Toggle	3											Task mode: Toggle pin from OUT[n]. Event mode: Generate IN[n] when any change on pin.																					

Bit number				31	30	29	28	27	26	25	24	23	22	21	20	19	18	17	16	15	14	13	12	11	10	9	8	7	6	5	4	3	2	1	0
Id															E			D	D				B	B	B	B	B							A	A
Reset 0x00000000				**0**	**0**	**0**	**0**	**0**	**0**	**0**	**0**	**0**	**0**	**0**	**0**	**0**	**0**	**0**	**0**	**0**	**0**	**0**	**0**	**0**	**0**	**0**	**0**	**0**	**0**	**0**	**0**	**0**	**0**	**0**	**0**
Id	**RW**	**Field**	**Value Id**	**Value**											**Description**																						
E	RW	OUTINIT													When in task mode: Initial value of the output when the GPIOTE channel is configured. When in event mode: No effect.																					
			Low	0											Task mode: Initial value of pin before task triggering is low																					
			High	1											Task mode: Initial value of pin before task triggering is high																					

21.4.6 CONFIG[3]

Address offset: 0x51C

Configuration for OUT[n], SET[n] and CLR[n] tasks and IN[n] event

Bit number				31	30	29	28	27	26	25	24	23	22	21	20	19	18	17	16	15	14	13	12	11	10	9	8	7	6	5	4	3	2	1	0
Id															E			D	D				B	B	B	B	B							A	A
Reset 0x00000000				**0**	**0**	**0**	**0**	**0**	**0**	**0**	**0**	**0**	**0**	**0**	**0**	**0**	**0**	**0**	**0**	**0**	**0**	**0**	**0**	**0**	**0**	**0**	**0**	**0**	**0**	**0**	**0**	**0**	**0**	**0**	**0**
Id	**RW**	**Field**	**Value Id**	**Value**											**Description**																						
A	RW	MODE													Mode																					
			Disabled	0											Disabled. Pin specified by PSEL will not be acquired by the GPIOTE module.																					
			Event	1											Event mode The pin specified by PSEL will be configured as an input and the IN[n] event will be generated if operation specified in POLARITY occurs on the pin.																					
			Task	3											Task mode The GPIO specified by PSEL will be configured as an output and triggering the SET[n], CLR[n] or OUT[n] task will perform the operation specified by POLARITY on the pin. When enabled as a task the GPIOTE module will acquire the pin and the pin can no longer be written as a regular output pin from the GPIO module.																					
B	RW	PSEL		[0..31]											GPIO number associated with SET[n], CLR[n] and OUT[n] tasks and IN[n] event																					
D	RW	POLARITY													When In task mode: Operation to be performed on output when OUT[n] task is triggered. When In event mode: Operation on input that shall trigger IN[n] event.																					
			None	0											Task mode: No effect on pin from OUT[n] task. Event mode: no IN[n] event generated on pin activity.																					
			LoToHi	1											Task mode: Set pin from OUT[n] task. Event mode: Generate IN[n] event when rising edge on pin.																					
			HiToLo	2											Task mode: Clear pin from OUT[n] task. Event mode: Generate IN[n] event when falling edge on pin.																					
			Toggle	3											Task mode: Toggle pin from OUT[n]. Event mode: Generate IN[n] when any change on pin.																					
E	RW	OUTINIT													When in task mode: Initial value of the output when the GPIOTE channel is configured. When in event mode: No effect.																					
			Low	0											Task mode: Initial value of pin before task triggering is low																					
			High	1											Task mode: Initial value of pin before task triggering is high																					

21.4.7 CONFIG[4]

Address offset: 0x520

Configuration for OUT[n], SET[n] and CLR[n] tasks and IN[n] event

Bit number				31	30	29	28	27	26	25	24	23	22	21	20	19	18	17	16	15	14	13	12	11	10	9	8	7	6	5	4	3	2	1	0
Id															E			D	D				B	B	B	B	B							A	A
Reset 0x00000000				**0**	**0**	**0**	**0**	**0**	**0**	**0**	**0**	**0**	**0**	**0**	**0**	**0**	**0**	**0**	**0**	**0**	**0**	**0**	**0**	**0**	**0**	**0**	**0**	**0**	**0**	**0**	**0**	**0**	**0**	**0**	**0**
Id	**RW**	**Field**	**Value Id**	**Value**											**Description**																						
A	RW	MODE													Mode																						
			Disabled	0											Disabled. Pin specified by PSEL will not be acquired by the GPIOTE module.																						
			Event	1											Event mode The pin specified by PSEL will be configured as an input and the IN[n] event will be generated if operation specified in POLARITY occurs on the pin.																						
			Task	3											Task mode The GPIO specified by PSEL will be configured as an output and triggering the SET[n], CLR[n] or OUT[n] task will perform the operation specified by POLARITY on the pin. When enabled as a task the GPIOTE module will acquire the pin and the pin can no longer be written as a regular output pin from the GPIO module.																						
B	RW	PSEL		[0..31]											GPIO number associated with SET[n], CLR[n] and OUT[n] tasks and IN[n] event																						
D	RW	POLARITY													When In task mode: Operation to be performed on output when OUT[n] task is triggered. When In event mode: Operation on input that shall trigger IN[n] event.																						
			None	0											Task mode: No effect on pin from OUT[n] task. Event mode: no IN[n] event generated on pin activity.																						
			LoToHi	1											Task mode: Set pin from OUT[n] task. Event mode: Generate IN[n] event when rising edge on pin.																						
			HiToLo	2											Task mode: Clear pin from OUT[n] task. Event mode: Generate IN[n] event when falling edge on pin.																						
			Toggle	3											Task mode: Toggle pin from OUT[n]. Event mode: Generate IN[n] when any change on pin.																						
E	RW	OUTINIT													When in task mode: Initial value of the output when the GPIOTE channel is configured. When in event mode: No effect.																						
			Low	0											Task mode: Initial value of pin before task triggering is low																						
			High	1											Task mode: Initial value of pin before task triggering is high																						

21.4.8 CONFIG[5]

Address offset: 0x524

Configuration for OUT[n], SET[n] and CLR[n] tasks and IN[n] event

Bit number				31	30	29	28	27	26	25	24	23	22	21	20	19	18	17	16	15	14	13	12	11	10	9	8	7	6	5	4	3	2	1	0
Id															E			D	D				B	B	B	B	B							A	A
Reset 0x00000000				**0**	**0**	**0**	**0**	**0**	**0**	**0**	**0**	**0**	**0**	**0**	**0**	**0**	**0**	**0**	**0**	**0**	**0**	**0**	**0**	**0**	**0**	**0**	**0**	**0**	**0**	**0**	**0**	**0**	**0**	**0**	**0**
Id	**RW**	**Field**	**Value Id**	**Value**											**Description**																						
A	RW	MODE													Mode																						
			Disabled	0											Disabled. Pin specified by PSEL will not be acquired by the GPIOTE module.																						
			Event	1											Event mode The pin specified by PSEL will be configured as an input and the IN[n] event will be generated if operation specified in POLARITY occurs on the pin.																						
			Task	3											Task mode The GPIO specified by PSEL will be configured as an output and triggering the SET[n], CLR[n] or OUT[n] task will perform the operation specified by POLARITY on the pin. When enabled as a task the GPIOTE module will acquire the pin and the pin can no longer be written as a regular output pin from the GPIO module.																						

Bit number				31	30	29	28	27	26	25	24	23	22	21	20	19	18	17	16	15	14	13	12	11	10	9	8	7	6	5	4	3	2	1	0
Id															E			D	D				B	B	B	B	B							A	A
Reset 0x00000000				**0**	**0**	**0**	**0**	**0**	**0**	**0**	**0**	**0**	**0**	**0**	**0**	**0**	**0**	**0**	**0**	**0**	**0**	**0**	**0**	**0**	**0**	**0**	**0**	**0**	**0**	**0**	**0**	**0**	**0**	**0**	**0**
Id	**RW**	**Field**	**Value Id**	**Value**											**Description**																						
B	RW	PSEL		[0..31]											GPIO number associated with SET[n], CLR[n] and OUT[n] tasks and IN[n] event																					
D	RW	POLARITY													When In task mode: Operation to be performed on output when OUT[n] task is triggered. When In event mode: Operation on input that shall trigger IN[n] event.																					
			None	0											Task mode: No effect on pin from OUT[n] task. Event mode: no IN[n] event generated on pin activity.																					
			LoToHi	1											Task mode: Set pin from OUT[n] task. Event mode: Generate IN[n] event when rising edge on pin.																					
			HiToLo	2											Task mode: Clear pin from OUT[n] task. Event mode: Generate IN[n] event when falling edge on pin.																					
			Toggle	3											Task mode: Toggle pin from OUT[n]. Event mode: Generate IN[n] when any change on pin.																					
E	RW	OUTINIT													When in task mode: Initial value of the output when the GPIOTE channel is configured. When in event mode: No effect.																					
			Low	0											Task mode: Initial value of pin before task triggering is low																					
			High	1											Task mode: Initial value of pin before task triggering is high																					

21.4.9 CONFIG[6]

Address offset: 0x528

Configuration for OUT[n], SET[n] and CLR[n] tasks and IN[n] event

Bit number				31	30	29	28	27	26	25	24	23	22	21	20	19	18	17	16	15	14	13	12	11	10	9	8	7	6	5	4	3	2	1	0
Id															E			D	D				B	B	B	B	B							A	A
Reset 0x00000000				**0**	**0**	**0**	**0**	**0**	**0**	**0**	**0**	**0**	**0**	**0**	**0**	**0**	**0**	**0**	**0**	**0**	**0**	**0**	**0**	**0**	**0**	**0**	**0**	**0**	**0**	**0**	**0**	**0**	**0**	**0**	**0**
Id	**RW**	**Field**	**Value Id**	**Value**											**Description**																						
A	RW	MODE													Mode																					
			Disabled	0											Disabled. Pin specified by PSEL will not be acquired by the GPIOTE module.																					
			Event	1											Event mode The pin specified by PSEL will be configured as an input and the IN[n] event will be generated if operation specified in POLARITY occurs on the pin.																					
			Task	3											Task mode The GPIO specified by PSEL will be configured as an output and triggering the SET[n], CLR[n] or OUT[n] task will perform the operation specified by POLARITY on the pin. When enabled as a task the GPIOTE module will acquire the pin and the pin can no longer be written as a regular output pin from the GPIO module.																					
B	RW	PSEL		[0..31]											GPIO number associated with SET[n], CLR[n] and OUT[n] tasks and IN[n] event																					
D	RW	POLARITY													When In task mode: Operation to be performed on output when OUT[n] task is triggered. When In event mode: Operation on input that shall trigger IN[n] event.																					
			None	0											Task mode: No effect on pin from OUT[n] task. Event mode: no IN[n] event generated on pin activity.																					
			LoToHi	1											Task mode: Set pin from OUT[n] task. Event mode: Generate IN[n] event when rising edge on pin.																					
			HiToLo	2											Task mode: Clear pin from OUT[n] task. Event mode: Generate IN[n] event when falling edge on pin.																					
			Toggle	3											Task mode: Toggle pin from OUT[n]. Event mode: Generate IN[n] when any change on pin.																					

Bit number				31	30	29	28	27	26	25	24	23	22	21	20	19	18	17	16	15	14	13	12	11	10	9	8	7	6	5	4	3	2	1	0
Id															E			D	D				B	B	B	B	B							A	A
Reset 0x00000000				**0**	**0**	**0**	**0**	**0**	**0**	**0**	**0**	**0**	**0**	**0**	**0**	**0**	**0**	**0**	**0**	**0**	**0**	**0**	**0**	**0**	**0**	**0**	**0**	**0**	**0**	**0**	**0**	**0**	**0**	**0**	**0**
Id	**RW**	**Field**	**Value Id**	**Value**											**Description**																						
E	RW	OUTINIT													When in task mode: Initial value of the output when the GPIOTE channel is configured. When in event mode: No effect.																					
			Low	0											Task mode: Initial value of pin before task triggering is low																					
			High	1											Task mode: Initial value of pin before task triggering is high																					

21.4.10 CONFIG[7]

Address offset: 0x52C

Configuration for OUT[n], SET[n] and CLR[n] tasks and IN[n] event

Bit number				31	30	29	28	27	26	25	24	23	22	21	20	19	18	17	16	15	14	13	12	11	10	9	8	7	6	5	4	3	2	1	0
Id															E			D	D				B	B	B	B	B							A	A
Reset 0x00000000				**0**	**0**	**0**	**0**	**0**	**0**	**0**	**0**	**0**	**0**	**0**	**0**	**0**	**0**	**0**	**0**	**0**	**0**	**0**	**0**	**0**	**0**	**0**	**0**	**0**	**0**	**0**	**0**	**0**	**0**	**0**	**0**
Id	**RW**	**Field**	**Value Id**	**Value**											**Description**																						
A	RW	MODE													Mode																					
			Disabled	0											Disabled. Pin specified by PSEL will not be acquired by the GPIOTE module.																					
			Event	1											Event mode The pin specified by PSEL will be configured as an input and the IN[n] event will be generated if operation specified in POLARITY occurs on the pin.																					
			Task	3											Task mode The GPIO specified by PSEL will be configured as an output and triggering the SET[n], CLR[n] or OUT[n] task will perform the operation specified by POLARITY on the pin. When enabled as a task the GPIOTE module will acquire the pin and the pin can no longer be written as a regular output pin from the GPIO module.																					
B	RW	PSEL		[0..31]											GPIO number associated with SET[n], CLR[n] and OUT[n] tasks and IN[n] event																					
D	RW	POLARITY													When In task mode: Operation to be performed on output when OUT[n] task is triggered. When In event mode: Operation on input that shall trigger IN[n] event.																					
			None	0											Task mode: No effect on pin from OUT[n] task. Event mode: no IN[n] event generated on pin activity.																					
			LoToHi	1											Task mode: Set pin from OUT[n] task. Event mode: Generate IN[n] event when rising edge on pin.																					
			HiToLo	2											Task mode: Clear pin from OUT[n] task. Event mode: Generate IN[n] event when falling edge on pin.																					
			Toggle	3											Task mode: Toggle pin from OUT[n]. Event mode: Generate IN[n] when any change on pin.																					
E	RW	OUTINIT													When in task mode: Initial value of the output when the GPIOTE channel is configured. When in event mode: No effect.																					
			Low	0											Task mode: Initial value of pin before task triggering is low																					
			High	1											Task mode: Initial value of pin before task triggering is high																					

21.5 Electrical Specification

21.5.1 GPIOTE Electrical Specification

Symbol	Description	Min.	Typ.	Max.	Units
$I_{GPIOTE,IN}$	Run current with 1 or more GPIOTE active channels in Input mode		0.1	0.5	µA

22 PPI — Programmable peripheral interconnect

The Programmable peripheral interconnect (PPI) enables peripherals to interact autonomously with each other using tasks and events independent of the CPU. The PPI allows precise synchronization between peripherals when real-time application constraints exist and eliminates the need for CPU activity to implement behavior which can be predefined using PPI.

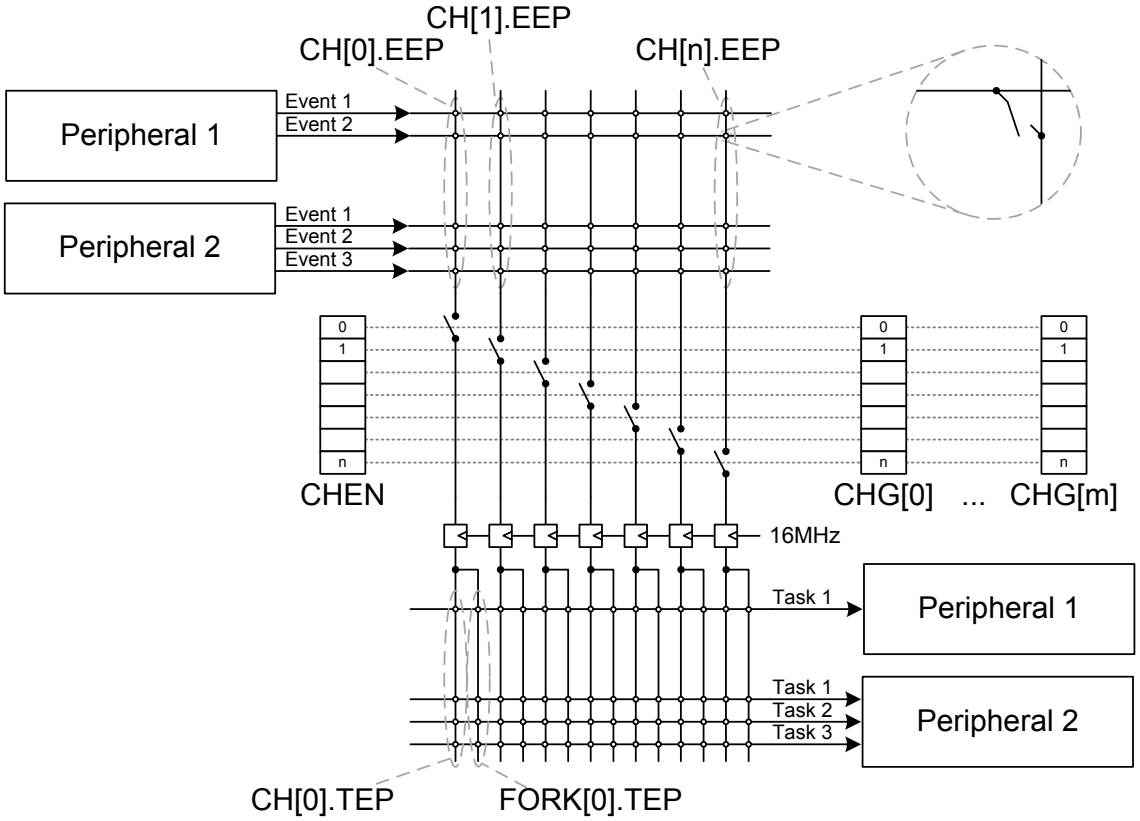

Figure 27: PPI block diagram

The PPI system has, in addition to the fully programmable peripheral interconnections, a set of channels where the event end point (EEP) and task end points (TEP) are fixed in hardware. These fixed channels can be individually enabled, disabled, or added to PPI channel groups in the same way as ordinary PPI channels.

Table 30: Configurable and fixed PPI channels

Instance	Channel	Number of channels	Number of groups
PPI	0-19	20	6
PPI (fixed)	20-31	12	

The PPI provides a mechanism to automatically trigger a task in one peripheral as a result of an event occurring in another peripheral. A task is connected to an event through a PPI channel. The PPI channel is composed of three end point registers, one EEP and two TEPs. A peripheral task is connected to a TEP using the address of the task register associated with the task. Similarly, a peripheral event is connected to an EEP using the address of the event register associated with the event.

On each PPI channel, the signals are synchronized to the 16 MHz clock, to avoid any internal violation of setup and hold timings. As a consequence, events that are synchronous to the 16 MHz clock will be delayed by one clock period, while other asynchronous events will be delayed by up to one 16 MHz clock period.

Each TEP implements a fork mechanism that enables a second task to be triggered at the same time as the task specified in the TEP is triggered. This second task is configured in the task end point register in the FORK registers groups, e.g. FORK.TEP[0] is associated with PPI channel CH[0].

There are two ways of enabling and disabling PPI channels:

- Enable or disable PPI channels individually using the CHEN, CHENSET, and CHENCLR registers.
- Enable or disable PPI channels in PPI channel groups through the groups' ENABLE and DISABLE tasks. Prior to these tasks being triggered, the PPI channel group must be configured to define which PPI channels belongs to which groups.

Note that when a channel belongs to two groups m and n, and CHG[m].EN and CHG[n].DIS occur simultaneously (m and n can be equal or different), EN on that channel has priority.

PPI tasks (for example, CHG[0].EN) can be triggered through the PPI like any other task, which means they can be hooked up to a PPI channel as a TEP. One event can trigger multiple tasks by using multiple channels and one task can be triggered by multiple events in the same way.

22.1 Pre-programmed channels

Some of the PPI channels are pre-programmed. These channels cannot be configured by the CPU, but can be added to groups and enabled and disabled like the general purpose PPI channels. The FORK TEP for these channels are still programmable and can be used by the application.

For a list of pre-programmed PPI channels, see the table below.

Table 31: Pre-programmed channels

Channel	EEP	TEP
20	TIMER0->EVENTS_COMPARE[0]	RADIO->TASKS_TXEN
21	TIMER0->EVENTS_COMPARE[0]	RADIO->TASKS_RXEN
22	TIMER0->EVENTS_COMPARE[1]	RADIO->TASKS_DISABLE
23	RADIO->EVENTS_BCMATCH	AAR->TASKS_START
24	RADIO->EVENTS_READY	CCM->TASKS_KSGEN
25	RADIO->EVENTS_ADDRESS	CCM->TASKS_CRYPT
26	RADIO->EVENTS_ADDRESS	TIMER0->TASKS_CAPTURE[1]
27	RADIO->EVENTS_END	TIMER0->TASKS_CAPTURE[2]
28	RTC0->EVENTS_COMPARE[0]	RADIO->TASKS_TXEN
29	RTC0->EVENTS_COMPARE[0]	RADIO->TASKS_RXEN
30	RTC0->EVENTS_COMPARE[0]	TIMER0->TASKS_CLEAR
31	RTC0->EVENTS_COMPARE[0]	TIMER0->TASKS_START

22.2 Registers

Table 32: Instances

Base address	Peripheral	Instance	Description	Configuration
0x4001F000	PPI	PPI	PPI controller	

Table 33: Register Overview

Register	Offset	Description
TASKS_CHG[0].EN	0x000	Enable channel group 0
TASKS_CHG[0].DIS	0x004	Disable channel group 0
TASKS_CHG[1].EN	0x008	Enable channel group 1
TASKS_CHG[1].DIS	0x00C	Disable channel group 1
TASKS_CHG[2].EN	0x010	Enable channel group 2
TASKS_CHG[2].DIS	0x014	Disable channel group 2
TASKS_CHG[3].EN	0x018	Enable channel group 3
TASKS_CHG[3].DIS	0x01C	Disable channel group 3
TASKS_CHG[4].EN	0x020	Enable channel group 4
TASKS_CHG[4].DIS	0x024	Disable channel group 4
TASKS_CHG[5].EN	0x028	Enable channel group 5
TASKS_CHG[5].DIS	0x02C	Disable channel group 5
CHEN	0x500	Channel enable register
CHENSET	0x504	Channel enable set register
CHENCLR	0x508	Channel enable clear register

Register	Offset	Description
CH[0].EEP	0x510	Channel 0 event end-point
CH[0].TEP	0x514	Channel 0 task end-point
CH[1].EEP	0x518	Channel 1 event end-point
CH[1].TEP	0x51C	Channel 1 task end-point
CH[2].EEP	0x520	Channel 2 event end-point
CH[2].TEP	0x524	Channel 2 task end-point
CH[3].EEP	0x528	Channel 3 event end-point
CH[3].TEP	0x52C	Channel 3 task end-point
CH[4].EEP	0x530	Channel 4 event end-point
CH[4].TEP	0x534	Channel 4 task end-point
CH[5].EEP	0x538	Channel 5 event end-point
CH[5].TEP	0x53C	Channel 5 task end-point
CH[6].EEP	0x540	Channel 6 event end-point
CH[6].TEP	0x544	Channel 6 task end-point
CH[7].EEP	0x548	Channel 7 event end-point
CH[7].TEP	0x54C	Channel 7 task end-point
CH[8].EEP	0x550	Channel 8 event end-point
CH[8].TEP	0x554	Channel 8 task end-point
CH[9].EEP	0x558	Channel 9 event end-point
CH[9].TEP	0x55C	Channel 9 task end-point
CH[10].EEP	0x560	Channel 10 event end-point
CH[10].TEP	0x564	Channel 10 task end-point
CH[11].EEP	0x568	Channel 11 event end-point
CH[11].TEP	0x56C	Channel 11 task end-point
CH[12].EEP	0x570	Channel 12 event end-point
CH[12].TEP	0x574	Channel 12 task end-point
CH[13].EEP	0x578	Channel 13 event end-point
CH[13].TEP	0x57C	Channel 13 task end-point
CH[14].EEP	0x580	Channel 14 event end-point
CH[14].TEP	0x584	Channel 14 task end-point
CH[15].EEP	0x588	Channel 15 event end-point
CH[15].TEP	0x58C	Channel 15 task end-point
CH[16].EEP	0x590	Channel 16 event end-point
CH[16].TEP	0x594	Channel 16 task end-point
CH[17].EEP	0x598	Channel 17 event end-point
CH[17].TEP	0x59C	Channel 17 task end-point
CH[18].EEP	0x5A0	Channel 18 event end-point
CH[18].TEP	0x5A4	Channel 18 task end-point
CH[19].EEP	0x5A8	Channel 19 event end-point
CH[19].TEP	0x5AC	Channel 19 task end-point
CHG[0]	0x800	Channel group 0
CHG[1]	0x804	Channel group 1
CHG[2]	0x808	Channel group 2
CHG[3]	0x80C	Channel group 3
CHG[4]	0x810	Channel group 4
CHG[5]	0x814	Channel group 5
FORK[0].TEP	0x910	Channel 0 task end-point
FORK[1].TEP	0x914	Channel 1 task end-point
FORK[2].TEP	0x918	Channel 2 task end-point
FORK[3].TEP	0x91C	Channel 3 task end-point
FORK[4].TEP	0x920	Channel 4 task end-point
FORK[5].TEP	0x924	Channel 5 task end-point
FORK[6].TEP	0x928	Channel 6 task end-point
FORK[7].TEP	0x92C	Channel 7 task end-point
FORK[8].TEP	0x930	Channel 8 task end-point
FORK[9].TEP	0x934	Channel 9 task end-point
FORK[10].TEP	0x938	Channel 10 task end-point
FORK[11].TEP	0x93C	Channel 11 task end-point

Register	Offset	Description
FORK[12].TEP	0x940	Channel 12 task end-point
FORK[13].TEP	0x944	Channel 13 task end-point
FORK[14].TEP	0x948	Channel 14 task end-point
FORK[15].TEP	0x94C	Channel 15 task end-point
FORK[16].TEP	0x950	Channel 16 task end-point
FORK[17].TEP	0x954	Channel 17 task end-point
FORK[18].TEP	0x958	Channel 18 task end-point
FORK[19].TEP	0x95C	Channel 19 task end-point
FORK[20].TEP	0x960	Channel 20 task end-point
FORK[21].TEP	0x964	Channel 21 task end-point
FORK[22].TEP	0x968	Channel 22 task end-point
FORK[23].TEP	0x96C	Channel 23 task end-point
FORK[24].TEP	0x970	Channel 24 task end-point
FORK[25].TEP	0x974	Channel 25 task end-point
FORK[26].TEP	0x978	Channel 26 task end-point
FORK[27].TEP	0x97C	Channel 27 task end-point
FORK[28].TEP	0x980	Channel 28 task end-point
FORK[29].TEP	0x984	Channel 29 task end-point
FORK[30].TEP	0x988	Channel 30 task end-point
FORK[31].TEP	0x98C	Channel 31 task end-point

22.2.1 CHEN

Address offset: 0x500

Channel enable register

Bit number				31	30	29	28	27	26	25	24	23	22	21	20	19	18	17	16	15	14	13	12	11	10	9	8	7	6	5	4	3	2	1	0
Id				f	e	d	c	b	a	Z	Y	X	W	V	U	T	S	R	Q	P	O	N	M	L	K	J	I	H	G	F	E	D	C	B	A
Reset 0x00000000				**0**	**0**	**0**	**0**	**0**	**0**	**0**	**0**	**0**	**0**	**0**	**0**	**0**	**0**	**0**	**0**	**0**	**0**	**0**	**0**	**0**	**0**	**0**	**0**	**0**	**0**	**0**	**0**	**0**	**0**	**0**	**0**
Id	**RW**	**Field**	**Value Id**	**Value**																															**Description**
A	RW	CH0																																	Enable or disable channel 0
			Disabled	0																															Disable channel
			Enabled	1																															Enable channel
B	RW	CH1																																	Enable or disable channel 1
			Disabled	0																															Disable channel
			Enabled	1																															Enable channel
C	RW	CH2																																	Enable or disable channel 2
			Disabled	0																															Disable channel
			Enabled	1																															Enable channel
D	RW	CH3																																	Enable or disable channel 3
			Disabled	0																															Disable channel
			Enabled	1																															Enable channel
E	RW	CH4																																	Enable or disable channel 4
			Disabled	0																															Disable channel
			Enabled	1																															Enable channel
F	RW	CH5																																	Enable or disable channel 5
			Disabled	0																															Disable channel
			Enabled	1																															Enable channel
G	RW	CH6																																	Enable or disable channel 6
			Disabled	0																															Disable channel
			Enabled	1																															Enable channel
H	RW	CH7																																	Enable or disable channel 7
			Disabled	0																															Disable channel
			Enabled	1																															Enable channel
I	RW	CH8																																	Enable or disable channel 8
			Disabled	0																															Disable channel
			Enabled	1																															Enable channel
J	RW	CH9																																	Enable or disable channel 9

Bit number				31	30	29	28	27	26	25	24	23	22	21	20	19	18	17	16	15	14	13	12	11	10	9	8	7	6	5	4	3	2	1	0
Id				f	e	d	c	b	a	Z	Y	X	W	V	U	T	S	R	Q	P	O	N	M	L	K	J	I	H	G	F	E	D	C	B	A
Reset 0x00000000				**0**	**0**	**0**	**0**	**0**	**0**	**0**	**0**	**0**	**0**	**0**	**0**	**0**	**0**	**0**	**0**	**0**	**0**	**0**	**0**	**0**	**0**	**0**	**0**	**0**	**0**	**0**	**0**	**0**	**0**	**0**	**0**
Id	**RW**	**Field**	**Value Id**	**Value**								**Description**																							
			Disabled	0								Disable channel																							
			Enabled	1								Enable channel																							
K	RW	CH10										Enable or disable channel 10																							
			Disabled	0								Disable channel																							
			Enabled	1								Enable channel																							
L	RW	CH11										Enable or disable channel 11																							
			Disabled	0								Disable channel																							
			Enabled	1								Enable channel																							
M	RW	CH12										Enable or disable channel 12																							
			Disabled	0								Disable channel																							
			Enabled	1								Enable channel																							
N	RW	CH13										Enable or disable channel 13																							
			Disabled	0								Disable channel																							
			Enabled	1								Enable channel																							
O	RW	CH14										Enable or disable channel 14																							
			Disabled	0								Disable channel																							
			Enabled	1								Enable channel																							
P	RW	CH15										Enable or disable channel 15																							
			Disabled	0								Disable channel																							
			Enabled	1								Enable channel																							
Q	RW	CH16										Enable or disable channel 16																							
			Disabled	0								Disable channel																							
			Enabled	1								Enable channel																							
R	RW	CH17										Enable or disable channel 17																							
			Disabled	0								Disable channel																							
			Enabled	1								Enable channel																							
S	RW	CH18										Enable or disable channel 18																							
			Disabled	0								Disable channel																							
			Enabled	1								Enable channel																							
T	RW	CH19										Enable or disable channel 19																							
			Disabled	0								Disable channel																							
			Enabled	1								Enable channel																							
U	RW	CH20										Enable or disable channel 20																							
			Disabled	0								Disable channel																							
			Enabled	1								Enable channel																							
V	RW	CH21										Enable or disable channel 21																							
			Disabled	0								Disable channel																							
			Enabled	1								Enable channel																							
W	RW	CH22										Enable or disable channel 22																							
			Disabled	0								Disable channel																							
			Enabled	1								Enable channel																							
X	RW	CH23										Enable or disable channel 23																							
			Disabled	0								Disable channel																							
			Enabled	1								Enable channel																							
Y	RW	CH24										Enable or disable channel 24																							
			Disabled	0								Disable channel																							
			Enabled	1								Enable channel																							
Z	RW	CH25										Enable or disable channel 25																							
			Disabled	0								Disable channel																							
			Enabled	1								Enable channel																							
a	RW	CH26										Enable or disable channel 26																							
			Disabled	0								Disable channel																							
			Enabled	1								Enable channel																							
b	RW	CH27										Enable or disable channel 27																							
			Disabled	0								Disable channel																							

Bit number				31	30	29	28	27	26	25	24	23	22	21	20	19	18	17	16	15	14	13	12	11	10	9	8	7	6	5	4	3	2	1	0
Id				f	e	d	c	b	a	Z	Y	X	W	V	U	T	S	R	Q	P	O	N	M	L	K	J	I	H	G	F	E	D	C	B	A
Reset 0x00000000				**0**	**0**	**0**	**0**	**0**	**0**	**0**	**0**	**0**	**0**	**0**	**0**	**0**	**0**	**0**	**0**	**0**	**0**	**0**	**0**	**0**	**0**	**0**	**0**	**0**	**0**	**0**	**0**	**0**	**0**	**0**	**0**
Id	**RW**	**Field**	**Value Id**	**Value**								**Description**																							
			Enabled	1								Enable channel																							
c	RW	CH28										Enable or disable channel 28																							
			Disabled	0								Disable channel																							
			Enabled	1								Enable channel																							
d	RW	CH29										Enable or disable channel 29																							
			Disabled	0								Disable channel																							
			Enabled	1								Enable channel																							
e	RW	CH30										Enable or disable channel 30																							
			Disabled	0								Disable channel																							
			Enabled	1								Enable channel																							
f	RW	CH31										Enable or disable channel 31																							
			Disabled	0								Disable channel																							
			Enabled	1								Enable channel																							

22.2.2 CHENSET

Address offset: 0x504

Channel enable set register

Read: reads value of CH{i} field in CHEN register.

Bit number				31	30	29	28	27	26	25	24	23	22	21	20	19	18	17	16	15	14	13	12	11	10	9	8	7	6	5	4	3	2	1	0
Id				f	e	d	c	b	a	Z	Y	X	W	V	U	T	S	R	Q	P	O	N	M	L	K	J	I	H	G	F	E	D	C	B	A
Reset 0x00000000				**0**	**0**	**0**	**0**	**0**	**0**	**0**	**0**	**0**	**0**	**0**	**0**	**0**	**0**	**0**	**0**	**0**	**0**	**0**	**0**	**0**	**0**	**0**	**0**	**0**	**0**	**0**	**0**	**0**	**0**	**0**	**0**
Id	**RW**	**Field**	**Value Id**	**Value**								**Description**																							
A	RW	CH0										Channel 0 enable set register. Writing '0' has no effect																							
			Disabled	0								Read: channel disabled																							
			Enabled	1								Read: channel enabled																							
			Set	1								Write: Enable channel																							
B	RW	CH1										Channel 1 enable set register. Writing '0' has no effect																							
			Disabled	0								Read: channel disabled																							
			Enabled	1								Read: channel enabled																							
			Set	1								Write: Enable channel																							
C	RW	CH2										Channel 2 enable set register. Writing '0' has no effect																							
			Disabled	0								Read: channel disabled																							
			Enabled	1								Read: channel enabled																							
			Set	1								Write: Enable channel																							
D	RW	CH3										Channel 3 enable set register. Writing '0' has no effect																							
			Disabled	0								Read: channel disabled																							
			Enabled	1								Read: channel enabled																							
			Set	1								Write: Enable channel																							
E	RW	CH4										Channel 4 enable set register. Writing '0' has no effect																							
			Disabled	0								Read: channel disabled																							
			Enabled	1								Read: channel enabled																							
			Set	1								Write: Enable channel																							
F	RW	CH5										Channel 5 enable set register. Writing '0' has no effect																							
			Disabled	0								Read: channel disabled																							
			Enabled	1								Read: channel enabled																							
			Set	1								Write: Enable channel																							
G	RW	CH6										Channel 6 enable set register. Writing '0' has no effect																							
			Disabled	0								Read: channel disabled																							
			Enabled	1								Read: channel enabled																							
			Set	1								Write: Enable channel																							
H	RW	CH7										Channel 7 enable set register. Writing '0' has no effect																							
			Disabled	0								Read: channel disabled																							

Bit number				31	30	29	28	27	26	25	24	23	22	21	20	19	18	17	16	15	14	13	12	11	10	9	8	7	6	5	4	3	2	1	0
Id				f	e	d	c	b	a	Z	Y	X	W	V	U	T	S	R	Q	P	O	N	M	L	K	J	I	H	G	F	E	D	C	B	A
Reset 0x00000000				**0**	**0**	**0**	**0**	**0**	**0**	**0**	**0**	**0**	**0**	**0**	**0**	**0**	**0**	**0**	**0**	**0**	**0**	**0**	**0**	**0**	**0**	**0**	**0**	**0**	**0**	**0**	**0**	**0**	**0**	**0**	**0**
Id	**RW**	**Field**		**Value Id**								**Value**																		**Description**						
				Enabled								1																		Read: channel enabled						
				Set								1																		Write: Enable channel						
I	RW	CH8																												Channel 8 enable set register. Writing '0' has no effect						
				Disabled								0																		Read: channel disabled						
				Enabled								1																		Read: channel enabled						
				Set								1																		Write: Enable channel						
J	RW	CH9																												Channel 9 enable set register. Writing '0' has no effect						
				Disabled								0																		Read: channel disabled						
				Enabled								1																		Read: channel enabled						
				Set								1																		Write: Enable channel						
K	RW	CH10																												Channel 10 enable set register. Writing '0' has no effect						
				Disabled								0																		Read: channel disabled						
				Enabled								1																		Read: channel enabled						
				Set								1																		Write: Enable channel						
L	RW	CH11																												Channel 11 enable set register. Writing '0' has no effect						
				Disabled								0																		Read: channel disabled						
				Enabled								1																		Read: channel enabled						
				Set								1																		Write: Enable channel						
M	RW	CH12																												Channel 12 enable set register. Writing '0' has no effect						
				Disabled								0																		Read: channel disabled						
				Enabled								1																		Read: channel enabled						
				Set								1																		Write: Enable channel						
N	RW	CH13																												Channel 13 enable set register. Writing '0' has no effect						
				Disabled								0																		Read: channel disabled						
				Enabled								1																		Read: channel enabled						
				Set								1																		Write: Enable channel						
O	RW	CH14																												Channel 14 enable set register. Writing '0' has no effect						
				Disabled								0																		Read: channel disabled						
				Enabled								1																		Read: channel enabled						
				Set								1																		Write: Enable channel						
P	RW	CH15																												Channel 15 enable set register. Writing '0' has no effect						
				Disabled								0																		Read: channel disabled						
				Enabled								1																		Read: channel enabled						
				Set								1																		Write: Enable channel						
Q	RW	CH16																												Channel 16 enable set register. Writing '0' has no effect						
				Disabled								0																		Read: channel disabled						
				Enabled								1																		Read: channel enabled						
				Set								1																		Write: Enable channel						
R	RW	CH17																												Channel 17 enable set register. Writing '0' has no effect						
				Disabled								0																		Read: channel disabled						
				Enabled								1																		Read: channel enabled						
				Set								1																		Write: Enable channel						
S	RW	CH18																												Channel 18 enable set register. Writing '0' has no effect						
				Disabled								0																		Read: channel disabled						
				Enabled								1																		Read: channel enabled						
				Set								1																		Write: Enable channel						
T	RW	CH19																												Channel 19 enable set register. Writing '0' has no effect						
				Disabled								0																		Read: channel disabled						
				Enabled								1																		Read: channel enabled						
				Set								1																		Write: Enable channel						
U	RW	CH20																												Channel 20 enable set register. Writing '0' has no effect						
				Disabled								0																		Read: channel disabled						
				Enabled								1																		Read: channel enabled						
				Set								1																		Write: Enable channel						
V	RW	CH21																												Channel 21 enable set register. Writing '0' has no effect						

Bit number				31	30	29	28	27	26	25	24	23	22	21	20	19	18	17	16	15	14	13	12	11	10	9	8	7	6	5	4	3	2	1	0
Id				f	e	d	c	b	a	Z	Y	X	W	V	U	T	S	R	Q	P	O	N	M	L	K	J	I	H	G	F	E	D	C	B	A
Reset 0x00000000				**0**	**0**	**0**	**0**	**0**	**0**	**0**	**0**	**0**	**0**	**0**	**0**	**0**	**0**	**0**	**0**	**0**	**0**	**0**	**0**	**0**	**0**	**0**	**0**	**0**	**0**	**0**	**0**	**0**	**0**	**0**	**0**
Id	**RW**	**Field**	**Value Id**	**Value**								**Description**																							
			Disabled	0								Read: channel disabled																							
			Enabled	1								Read: channel enabled																							
			Set	1								Write: Enable channel																							
W	RW	CH22										Channel 22 enable set register. Writing '0' has no effect																							
			Disabled	0								Read: channel disabled																							
			Enabled	1								Read: channel enabled																							
			Set	1								Write: Enable channel																							
X	RW	CH23										Channel 23 enable set register. Writing '0' has no effect																							
			Disabled	0								Read: channel disabled																							
			Enabled	1								Read: channel enabled																							
			Set	1								Write: Enable channel																							
Y	RW	CH24										Channel 24 enable set register. Writing '0' has no effect																							
			Disabled	0								Read: channel disabled																							
			Enabled	1								Read: channel enabled																							
			Set	1								Write: Enable channel																							
Z	RW	CH25										Channel 25 enable set register. Writing '0' has no effect																							
			Disabled	0								Read: channel disabled																							
			Enabled	1								Read: channel enabled																							
			Set	1								Write: Enable channel																							
a	RW	CH26										Channel 26 enable set register. Writing '0' has no effect																							
			Disabled	0								Read: channel disabled																							
			Enabled	1								Read: channel enabled																							
			Set	1								Write: Enable channel																							
b	RW	CH27										Channel 27 enable set register. Writing '0' has no effect																							
			Disabled	0								Read: channel disabled																							
			Enabled	1								Read: channel enabled																							
			Set	1								Write: Enable channel																							
c	RW	CH28										Channel 28 enable set register. Writing '0' has no effect																							
			Disabled	0								Read: channel disabled																							
			Enabled	1								Read: channel enabled																							
			Set	1								Write: Enable channel																							
d	RW	CH29										Channel 29 enable set register. Writing '0' has no effect																							
			Disabled	0								Read: channel disabled																							
			Enabled	1								Read: channel enabled																							
			Set	1								Write: Enable channel																							
e	RW	CH30										Channel 30 enable set register. Writing '0' has no effect																							
			Disabled	0								Read: channel disabled																							
			Enabled	1								Read: channel enabled																							
			Set	1								Write: Enable channel																							
f	RW	CH31										Channel 31 enable set register. Writing '0' has no effect																							
			Disabled	0								Read: channel disabled																							
			Enabled	1								Read: channel enabled																							
			Set	1								Write: Enable channel																							

22.2.3 CHENCLR

Address offset: 0x508

Channel enable clear register

Read: reads value of CH{i} field in CHEN register.

Bit number				31	30	29	28	27	26	25	24	23	22	21	20	19	18	17	16	15	14	13	12	11	10	9	8	7	6	5	4	3	2	1	0
Id				f	e	d	c	b	a	Z	Y	X	W	V	U	T	S	R	Q	P	O	N	M	L	K	J	I	H	G	F	E	D	C	B	A
Reset 0x00000000				**0**	**0**	**0**	**0**	**0**	**0**	**0**	**0**	**0**	**0**	**0**	**0**	**0**	**0**	**0**	**0**	**0**	**0**	**0**	**0**	**0**	**0**	**0**	**0**	**0**	**0**	**0**	**0**	**0**	**0**	**0**	**0**
Id	**RW**	**Field**	**Value Id**	**Value**																															**Description**
A	RW	CH0																																	Channel 0 enable clear register. Writing '0' has no effect
			Disabled	0																															Read: channel disabled
			Enabled	1																															Read: channel enabled
			Clear	1																															Write: disable channel
B	RW	CH1																																	Channel 1 enable clear register. Writing '0' has no effect
			Disabled	0																															Read: channel disabled
			Enabled	1																															Read: channel enabled
			Clear	1																															Write: disable channel
C	RW	CH2																																	Channel 2 enable clear register. Writing '0' has no effect
			Disabled	0																															Read: channel disabled
			Enabled	1																															Read: channel enabled
			Clear	1																															Write: disable channel
D	RW	CH3																																	Channel 3 enable clear register. Writing '0' has no effect
			Disabled	0																															Read: channel disabled
			Enabled	1																															Read: channel enabled
			Clear	1																															Write: disable channel
E	RW	CH4																																	Channel 4 enable clear register. Writing '0' has no effect
			Disabled	0																															Read: channel disabled
			Enabled	1																															Read: channel enabled
			Clear	1																															Write: disable channel
F	RW	CH5																																	Channel 5 enable clear register. Writing '0' has no effect
			Disabled	0																															Read: channel disabled
			Enabled	1																															Read: channel enabled
			Clear	1																															Write: disable channel
G	RW	CH6																																	Channel 6 enable clear register. Writing '0' has no effect
			Disabled	0																															Read: channel disabled
			Enabled	1																															Read: channel enabled
			Clear	1																															Write: disable channel
H	RW	CH7																																	Channel 7 enable clear register. Writing '0' has no effect
			Disabled	0																															Read: channel disabled
			Enabled	1																															Read: channel enabled
			Clear	1																															Write: disable channel
I	RW	CH8																																	Channel 8 enable clear register. Writing '0' has no effect
			Disabled	0																															Read: channel disabled
			Enabled	1																															Read: channel enabled
			Clear	1																															Write: disable channel
J	RW	CH9																																	Channel 9 enable clear register. Writing '0' has no effect
			Disabled	0																															Read: channel disabled
			Enabled	1																															Read: channel enabled
			Clear	1																															Write: disable channel
K	RW	CH10																																	Channel 10 enable clear register. Writing '0' has no effect
			Disabled	0																															Read: channel disabled
			Enabled	1																															Read: channel enabled
			Clear	1																															Write: disable channel
L	RW	CH11																																	Channel 11 enable clear register. Writing '0' has no effect
			Disabled	0																															Read: channel disabled
			Enabled	1																															Read: channel enabled
			Clear	1																															Write: disable channel
M	RW	CH12																																	Channel 12 enable clear register. Writing '0' has no effect
			Disabled	0																															Read: channel disabled
			Enabled	1																															Read: channel enabled
			Clear	1																															Write: disable channel
N	RW	CH13																																	Channel 13 enable clear register. Writing '0' has no effect
			Disabled	0																															Read: channel disabled
			Enabled	1																															Read: channel enabled

Bit number				31	30	29	28	27	26	25	24	23	22	21	20	19	18	17	16	15	14	13	12	11	10	9	8	7	6	5	4	3	2	1	0
Id				f	e	d	c	b	a	Z	Y	X	W	V	U	T	S	R	Q	P	O	N	M	L	K	J	I	H	G	F	E	D	C	B	A
Reset 0x00000000				**0**	**0**	**0**	**0**	**0**	**0**	**0**	**0**	**0**	**0**	**0**	**0**	**0**	**0**	**0**	**0**	**0**	**0**	**0**	**0**	**0**	**0**	**0**	**0**	**0**	**0**	**0**	**0**	**0**	**0**	**0**	**0**
Id	**RW**	**Field**		**Value Id**								**Value**																		**Description**						
				Clear								1																		Write: disable channel						
O	RW	CH14																												Channel 14 enable clear register. Writing '0' has no effect						
				Disabled								0																		Read: channel disabled						
				Enabled								1																		Read: channel enabled						
				Clear								1																		Write: disable channel						
P	RW	CH15																												Channel 15 enable clear register. Writing '0' has no effect						
				Disabled								0																		Read: channel disabled						
				Enabled								1																		Read: channel enabled						
				Clear								1																		Write: disable channel						
Q	RW	CH16																												Channel 16 enable clear register. Writing '0' has no effect						
				Disabled								0																		Read: channel disabled						
				Enabled								1																		Read: channel enabled						
				Clear								1																		Write: disable channel						
R	RW	CH17																												Channel 17 enable clear register. Writing '0' has no effect						
				Disabled								0																		Read: channel disabled						
				Enabled								1																		Read: channel enabled						
				Clear								1																		Write: disable channel						
S	RW	CH18																												Channel 18 enable clear register. Writing '0' has no effect						
				Disabled								0																		Read: channel disabled						
				Enabled								1																		Read: channel enabled						
				Clear								1																		Write: disable channel						
T	RW	CH19																												Channel 19 enable clear register. Writing '0' has no effect						
				Disabled								0																		Read: channel disabled						
				Enabled								1																		Read: channel enabled						
				Clear								1																		Write: disable channel						
U	RW	CH20																												Channel 20 enable clear register. Writing '0' has no effect						
				Disabled								0																		Read: channel disabled						
				Enabled								1																		Read: channel enabled						
				Clear								1																		Write: disable channel						
V	RW	CH21																												Channel 21 enable clear register. Writing '0' has no effect						
				Disabled								0																		Read: channel disabled						
				Enabled								1																		Read: channel enabled						
				Clear								1																		Write: disable channel						
W	RW	CH22																												Channel 22 enable clear register. Writing '0' has no effect						
				Disabled								0																		Read: channel disabled						
				Enabled								1																		Read: channel enabled						
				Clear								1																		Write: disable channel						
X	RW	CH23																												Channel 23 enable clear register. Writing '0' has no effect						
				Disabled								0																		Read: channel disabled						
				Enabled								1																		Read: channel enabled						
				Clear								1																		Write: disable channel						
Y	RW	CH24																												Channel 24 enable clear register. Writing '0' has no effect						
				Disabled								0																		Read: channel disabled						
				Enabled								1																		Read: channel enabled						
				Clear								1																		Write: disable channel						
Z	RW	CH25																												Channel 25 enable clear register. Writing '0' has no effect						
				Disabled								0																		Read: channel disabled						
				Enabled								1																		Read: channel enabled						
				Clear								1																		Write: disable channel						
a	RW	CH26																												Channel 26 enable clear register. Writing '0' has no effect						
				Disabled								0																		Read: channel disabled						
				Enabled								1																		Read: channel enabled						
				Clear								1																		Write: disable channel						
b	RW	CH27																												Channel 27 enable clear register. Writing '0' has no effect						
				Disabled								0																		Read: channel disabled						

Bit number				31	30	29	28	27	26	25	24	23	22	21	20	19	18	17	16	15	14	13	12	11	10	9	8	7	6	5	4	3	2	1	0
Id				f	e	d	c	b	a	Z	Y	X	W	V	U	T	S	R	Q	P	O	N	M	L	K	J	I	H	G	F	E	D	C	B	A
Reset 0x00000000				**0**	**0**	**0**	**0**	**0**	**0**	**0**	**0**	**0**	**0**	**0**	**0**	**0**	**0**	**0**	**0**	**0**	**0**	**0**	**0**	**0**	**0**	**0**	**0**	**0**	**0**	**0**	**0**	**0**	**0**	**0**	**0**
Id	**RW**	**Field**	**Value Id**	**Value**								**Description**																							
			Enabled	1								Read: channel enabled																							
			Clear	1								Write: disable channel																							
c	RW	CH28										Channel 28 enable clear register. Writing '0' has no effect																							
			Disabled	0								Read: channel disabled																							
			Enabled	1								Read: channel enabled																							
			Clear	1								Write: disable channel																							
d	RW	CH29										Channel 29 enable clear register. Writing '0' has no effect																							
			Disabled	0								Read: channel disabled																							
			Enabled	1								Read: channel enabled																							
			Clear	1								Write: disable channel																							
e	RW	CH30										Channel 30 enable clear register. Writing '0' has no effect																							
			Disabled	0								Read: channel disabled																							
			Enabled	1								Read: channel enabled																							
			Clear	1								Write: disable channel																							
f	RW	CH31										Channel 31 enable clear register. Writing '0' has no effect																							
			Disabled	0								Read: channel disabled																							
			Enabled	1								Read: channel enabled																							
			Clear	1								Write: disable channel																							

22.2.4 CH[0].EEP

Address offset: 0x510

Channel 0 event end-point

Bit number				31	30	29	28	27	26	25	24	23	22	21	20	19	18	17	16	15	14	13	12	11	10	9	8	7	6	5	4	3	2	1	0
Id				A	A	A	A	A	A	A	A	A	A	A	A	A	A	A	A	A	A	A	A	A	A	A	A	A	A	A	A	A	A	A	A
Reset 0x00000000				**0**	**0**	**0**	**0**	**0**	**0**	**0**	**0**	**0**	**0**	**0**	**0**	**0**	**0**	**0**	**0**	**0**	**0**	**0**	**0**	**0**	**0**	**0**	**0**	**0**	**0**	**0**	**0**	**0**	**0**	**0**	**0**
Id	**RW**	**Field**	**Value Id**	**Value**								**Description**																							
A	RW	EEP										Pointer to event register. Accepts only addresses to registers from the Event group.																							

22.2.5 CH[0].TEP

Address offset: 0x514

Channel 0 task end-point

Bit number				31	30	29	28	27	26	25	24	23	22	21	20	19	18	17	16	15	14	13	12	11	10	9	8	7	6	5	4	3	2	1	0
Id				A	A	A	A	A	A	A	A	A	A	A	A	A	A	A	A	A	A	A	A	A	A	A	A	A	A	A	A	A	A	A	A
Reset 0x00000000				**0**	**0**	**0**	**0**	**0**	**0**	**0**	**0**	**0**	**0**	**0**	**0**	**0**	**0**	**0**	**0**	**0**	**0**	**0**	**0**	**0**	**0**	**0**	**0**	**0**	**0**	**0**	**0**	**0**	**0**	**0**	**0**
Id	**RW**	**Field**	**Value Id**	**Value**								**Description**																							
A	RW	TEP										Pointer to task register. Accepts only addresses to registers from the Task group.																							

22.2.6 CH[1].EEP

Address offset: 0x518

Channel 1 event end-point

Bit number				31	30	29	28	27	26	25	24	23	22	21	20	19	18	17	16	15	14	13	12	11	10	9	8	7	6	5	4	3	2	1	0
Id				A	A	A	A	A	A	A	A	A	A	A	A	A	A	A	A	A	A	A	A	A	A	A	A	A	A	A	A	A	A	A	A
Reset 0x00000000				**0**	**0**	**0**	**0**	**0**	**0**	**0**	**0**	**0**	**0**	**0**	**0**	**0**	**0**	**0**	**0**	**0**	**0**	**0**	**0**	**0**	**0**	**0**	**0**	**0**	**0**	**0**	**0**	**0**	**0**	**0**	**0**
Id	**RW**	**Field**	**Value Id**	**Value**								**Description**																							
A	RW	EEP										Pointer to event register. Accepts only addresses to registers from the Event group.																							

22.2.7 CH[1].TEP

Address offset: 0x51C

Channel 1 task end-point

Bit number	31	30	29	28	27	26	25	24	23	22	21	20	19	18	17	16	15	14	13	12	11	10	9	8	7	6	5	4	3	2	1	0
Id	A	A	A	A	A	A	A	A	A	A	A	A	A	A	A	A	A	A	A	A	A	A	A	A	A	A	A	A	A	A	A	A
Reset 0x00000000	**0**	**0**	**0**	**0**	**0**	**0**	**0**	**0**	**0**	**0**	**0**	**0**	**0**	**0**	**0**	**0**	**0**	**0**	**0**	**0**	**0**	**0**	**0**	**0**	**0**	**0**	**0**	**0**	**0**	**0**	**0**	**0**

Id	RW	Field	Value Id	Value	Description
A	RW	TEP			Pointer to task register. Accepts only addresses to registers from the Task group.

22.2.8 CH[2].EEP

Address offset: 0x520

Channel 2 event end-point

Bit number	31	30	29	28	27	26	25	24	23	22	21	20	19	18	17	16	15	14	13	12	11	10	9	8	7	6	5	4	3	2	1	0
Id	A	A	A	A	A	A	A	A	A	A	A	A	A	A	A	A	A	A	A	A	A	A	A	A	A	A	A	A	A	A	A	A
Reset 0x00000000	**0**	**0**	**0**	**0**	**0**	**0**	**0**	**0**	**0**	**0**	**0**	**0**	**0**	**0**	**0**	**0**	**0**	**0**	**0**	**0**	**0**	**0**	**0**	**0**	**0**	**0**	**0**	**0**	**0**	**0**	**0**	**0**

Id	RW	Field	Value Id	Value	Description
A	RW	EEP			Pointer to event register. Accepts only addresses to registers from the Event group.

22.2.9 CH[2].TEP

Address offset: 0x524

Channel 2 task end-point

Bit number	31	30	29	28	27	26	25	24	23	22	21	20	19	18	17	16	15	14	13	12	11	10	9	8	7	6	5	4	3	2	1	0
Id	A	A	A	A	A	A	A	A	A	A	A	A	A	A	A	A	A	A	A	A	A	A	A	A	A	A	A	A	A	A	A	A
Reset 0x00000000	**0**	**0**	**0**	**0**	**0**	**0**	**0**	**0**	**0**	**0**	**0**	**0**	**0**	**0**	**0**	**0**	**0**	**0**	**0**	**0**	**0**	**0**	**0**	**0**	**0**	**0**	**0**	**0**	**0**	**0**	**0**	**0**

Id	RW	Field	Value Id	Value	Description
A	RW	TEP			Pointer to task register. Accepts only addresses to registers from the Task group.

22.2.10 CH[3].EEP

Address offset: 0x528

Channel 3 event end-point

Bit number	31	30	29	28	27	26	25	24	23	22	21	20	19	18	17	16	15	14	13	12	11	10	9	8	7	6	5	4	3	2	1	0
Id	A	A	A	A	A	A	A	A	A	A	A	A	A	A	A	A	A	A	A	A	A	A	A	A	A	A	A	A	A	A	A	A
Reset 0x00000000	**0**	**0**	**0**	**0**	**0**	**0**	**0**	**0**	**0**	**0**	**0**	**0**	**0**	**0**	**0**	**0**	**0**	**0**	**0**	**0**	**0**	**0**	**0**	**0**	**0**	**0**	**0**	**0**	**0**	**0**	**0**	**0**

Id	RW	Field	Value Id	Value	Description
A	RW	EEP			Pointer to event register. Accepts only addresses to registers from the Event group.

22.2.11 CH[3].TEP

Address offset: 0x52C

Channel 3 task end-point

Bit number	31	30	29	28	27	26	25	24	23	22	21	20	19	18	17	16	15	14	13	12	11	10	9	8	7	6	5	4	3	2	1	0
Id	A	A	A	A	A	A	A	A	A	A	A	A	A	A	A	A	A	A	A	A	A	A	A	A	A	A	A	A	A	A	A	A
Reset 0x00000000	**0**	**0**	**0**	**0**	**0**	**0**	**0**	**0**	**0**	**0**	**0**	**0**	**0**	**0**	**0**	**0**	**0**	**0**	**0**	**0**	**0**	**0**	**0**	**0**	**0**	**0**	**0**	**0**	**0**	**0**	**0**	**0**

Id	RW	Field	Value Id	Value	Description
A	RW	TEP			Pointer to task register. Accepts only addresses to registers from the Task group.

22.2.12 CH[4].EEP

Address offset: 0x530

Channel 4 event end-point

Bit number	31	30	29	28	27	26	25	24	23	22	21	20	19	18	17	16	15	14	13	12	11	10	9	8	7	6	5	4	3	2	1	0
Id	A	A	A	A	A	A	A	A	A	A	A	A	A	A	A	A	A	A	A	A	A	A	A	A	A	A	A	A	A	A	A	A
Reset 0x00000000	**0**	**0**	**0**	**0**	**0**	**0**	**0**	**0**	**0**	**0**	**0**	**0**	**0**	**0**	**0**	**0**	**0**	**0**	**0**	**0**	**0**	**0**	**0**	**0**	**0**	**0**	**0**	**0**	**0**	**0**	**0**	**0**

Id	RW	Field	Value Id	Value	Description
A	RW	EEP			Pointer to event register. Accepts only addresses to registers from the Event group.

22.2.13 CH[4].TEP

Address offset: 0x534

Channel 4 task end-point

Bit number	31	30	29	28	27	26	25	24	23	22	21	20	19	18	17	16	15	14	13	12	11	10	9	8	7	6	5	4	3	2	1	0
Id	A	A	A	A	A	A	A	A	A	A	A	A	A	A	A	A	A	A	A	A	A	A	A	A	A	A	A	A	A	A	A	A
Reset 0x00000000	**0**	**0**	**0**	**0**	**0**	**0**	**0**	**0**	**0**	**0**	**0**	**0**	**0**	**0**	**0**	**0**	**0**	**0**	**0**	**0**	**0**	**0**	**0**	**0**	**0**	**0**	**0**	**0**	**0**	**0**	**0**	**0**

Id	RW	Field	Value Id	Value	Description
A	RW	TEP			Pointer to task register. Accepts only addresses to registers from the Task group.

22.2.14 CH[5].EEP

Address offset: 0x538

Channel 5 event end-point

Bit number	31	30	29	28	27	26	25	24	23	22	21	20	19	18	17	16	15	14	13	12	11	10	9	8	7	6	5	4	3	2	1	0
Id	A	A	A	A	A	A	A	A	A	A	A	A	A	A	A	A	A	A	A	A	A	A	A	A	A	A	A	A	A	A	A	A
Reset 0x00000000	**0**	**0**	**0**	**0**	**0**	**0**	**0**	**0**	**0**	**0**	**0**	**0**	**0**	**0**	**0**	**0**	**0**	**0**	**0**	**0**	**0**	**0**	**0**	**0**	**0**	**0**	**0**	**0**	**0**	**0**	**0**	**0**

Id	RW	Field	Value Id	Value	Description
A	RW	EEP			Pointer to event register. Accepts only addresses to registers from the Event group.

22.2.15 CH[5].TEP

Address offset: 0x53C

Channel 5 task end-point

Bit number	31	30	29	28	27	26	25	24	23	22	21	20	19	18	17	16	15	14	13	12	11	10	9	8	7	6	5	4	3	2	1	0
Id	A	A	A	A	A	A	A	A	A	A	A	A	A	A	A	A	A	A	A	A	A	A	A	A	A	A	A	A	A	A	A	A
Reset 0x00000000	**0**	**0**	**0**	**0**	**0**	**0**	**0**	**0**	**0**	**0**	**0**	**0**	**0**	**0**	**0**	**0**	**0**	**0**	**0**	**0**	**0**	**0**	**0**	**0**	**0**	**0**	**0**	**0**	**0**	**0**	**0**	**0**

Id	RW	Field	Value Id	Value	Description
A	RW	TEP			Pointer to task register. Accepts only addresses to registers from the Task group.

22.2.16 CH[6].EEP

Address offset: 0x540

Channel 6 event end-point

Bit number	31	30	29	28	27	26	25	24	23	22	21	20	19	18	17	16	15	14	13	12	11	10	9	8	7	6	5	4	3	2	1	0
Id	A	A	A	A	A	A	A	A	A	A	A	A	A	A	A	A	A	A	A	A	A	A	A	A	A	A	A	A	A	A	A	A
Reset 0x00000000	**0**	**0**	**0**	**0**	**0**	**0**	**0**	**0**	**0**	**0**	**0**	**0**	**0**	**0**	**0**	**0**	**0**	**0**	**0**	**0**	**0**	**0**	**0**	**0**	**0**	**0**	**0**	**0**	**0**	**0**	**0**	**0**

Id	RW	Field	Value Id	Value	Description
A	RW	EEP			Pointer to event register. Accepts only addresses to registers from the Event group.

22.2.17 CH[6].TEP

Address offset: 0x544

Channel 6 task end-point

Bit number	31	30	29	28	27	26	25	24	23	22	21	20	19	18	17	16	15	14	13	12	11	10	9	8	7	6	5	4	3	2	1	0
Id	A	A	A	A	A	A	A	A	A	A	A	A	A	A	A	A	A	A	A	A	A	A	A	A	A	A	A	A	A	A	A	A
Reset 0x00000000	**0**	**0**	**0**	**0**	**0**	**0**	**0**	**0**	**0**	**0**	**0**	**0**	**0**	**0**	**0**	**0**	**0**	**0**	**0**	**0**	**0**	**0**	**0**	**0**	**0**	**0**	**0**	**0**	**0**	**0**	**0**	**0**

Id	RW	Field	Value Id	Value	Description
A	RW	TEP			Pointer to task register. Accepts only addresses to registers from the Task group.

22.2.18 CH[7].EEP

Address offset: 0x548

Channel 7 event end-point

Bit number	31	30	29	28	27	26	25	24	23	22	21	20	19	18	17	16	15	14	13	12	11	10	9	8	7	6	5	4	3	2	1	0
Id	A	A	A	A	A	A	A	A	A	A	A	A	A	A	A	A	A	A	A	A	A	A	A	A	A	A	A	A	A	A	A	A
Reset 0x00000000	**0**	**0**	**0**	**0**	**0**	**0**	**0**	**0**	**0**	**0**	**0**	**0**	**0**	**0**	**0**	**0**	**0**	**0**	**0**	**0**	**0**	**0**	**0**	**0**	**0**	**0**	**0**	**0**	**0**	**0**	**0**	**0**

Id	RW	Field	Value Id	Value	Description
A	RW	EEP			Pointer to event register. Accepts only addresses to registers from the Event group.

22.2.19 CH[7].TEP

Address offset: 0x54C

Channel 7 task end-point

Bit number	31	30	29	28	27	26	25	24	23	22	21	20	19	18	17	16	15	14	13	12	11	10	9	8	7	6	5	4	3	2	1	0
Id	A	A	A	A	A	A	A	A	A	A	A	A	A	A	A	A	A	A	A	A	A	A	A	A	A	A	A	A	A	A	A	A
Reset 0x00000000	**0**	**0**	**0**	**0**	**0**	**0**	**0**	**0**	**0**	**0**	**0**	**0**	**0**	**0**	**0**	**0**	**0**	**0**	**0**	**0**	**0**	**0**	**0**	**0**	**0**	**0**	**0**	**0**	**0**	**0**	**0**	**0**

Id	RW	Field	Value Id	Value	Description
A	RW	TEP			Pointer to task register. Accepts only addresses to registers from the Task group.

22.2.20 CH[8].EEP

Address offset: 0x550

Channel 8 event end-point

Bit number	31	30	29	28	27	26	25	24	23	22	21	20	19	18	17	16	15	14	13	12	11	10	9	8	7	6	5	4	3	2	1	0
Id	A	A	A	A	A	A	A	A	A	A	A	A	A	A	A	A	A	A	A	A	A	A	A	A	A	A	A	A	A	A	A	A
Reset 0x00000000	**0**	**0**	**0**	**0**	**0**	**0**	**0**	**0**	**0**	**0**	**0**	**0**	**0**	**0**	**0**	**0**	**0**	**0**	**0**	**0**	**0**	**0**	**0**	**0**	**0**	**0**	**0**	**0**	**0**	**0**	**0**	**0**

Id	RW	Field	Value Id	Value	Description
A	RW	EEP			Pointer to event register. Accepts only addresses to registers from the Event group.

22.2.21 CH[8].TEP

Address offset: 0x554

Channel 8 task end-point

Bit number	31	30	29	28	27	26	25	24	23	22	21	20	19	18	17	16	15	14	13	12	11	10	9	8	7	6	5	4	3	2	1	0
Id	A	A	A	A	A	A	A	A	A	A	A	A	A	A	A	A	A	A	A	A	A	A	A	A	A	A	A	A	A	A	A	A
Reset 0x00000000	**0**	**0**	**0**	**0**	**0**	**0**	**0**	**0**	**0**	**0**	**0**	**0**	**0**	**0**	**0**	**0**	**0**	**0**	**0**	**0**	**0**	**0**	**0**	**0**	**0**	**0**	**0**	**0**	**0**	**0**	**0**	**0**

Id	RW	Field	Value Id	Value	Description
A	RW	TEP			Pointer to task register. Accepts only addresses to registers from the Task group.

22.2.22 CH[9].EEP

Address offset: 0x558

Channel 9 event end-point

Bit number	31	30	29	28	27	26	25	24	23	22	21	20	19	18	17	16	15	14	13	12	11	10	9	8	7	6	5	4	3	2	1	0
Id	A	A	A	A	A	A	A	A	A	A	A	A	A	A	A	A	A	A	A	A	A	A	A	A	A	A	A	A	A	A	A	A
Reset 0x00000000	**0**	**0**	**0**	**0**	**0**	**0**	**0**	**0**	**0**	**0**	**0**	**0**	**0**	**0**	**0**	**0**	**0**	**0**	**0**	**0**	**0**	**0**	**0**	**0**	**0**	**0**	**0**	**0**	**0**	**0**	**0**	**0**

Id	RW	Field	Value Id	Value	Description
A	RW	EEP			Pointer to event register. Accepts only addresses to registers from the Event group.

22.2.23 CH[9].TEP

Address offset: 0x55C

Channel 9 task end-point

Bit number	31	30	29	28	27	26	25	24	23	22	21	20	19	18	17	16	15	14	13	12	11	10	9	8	7	6	5	4	3	2	1	0
Id	A	A	A	A	A	A	A	A	A	A	A	A	A	A	A	A	A	A	A	A	A	A	A	A	A	A	A	A	A	A	A	A
Reset 0x00000000	**0**	**0**	**0**	**0**	**0**	**0**	**0**	**0**	**0**	**0**	**0**	**0**	**0**	**0**	**0**	**0**	**0**	**0**	**0**	**0**	**0**	**0**	**0**	**0**	**0**	**0**	**0**	**0**	**0**	**0**	**0**	**0**

Id	RW	Field	Value Id	Value	Description
A	RW	TEP			Pointer to task register. Accepts only addresses to registers from the Task group.

22.2.24 CH[10].EEP

Address offset: 0x560

Channel 10 event end-point

Bit number	31	30	29	28	27	26	25	24	23	22	21	20	19	18	17	16	15	14	13	12	11	10	9	8	7	6	5	4	3	2	1	0
Id	A	A	A	A	A	A	A	A	A	A	A	A	A	A	A	A	A	A	A	A	A	A	A	A	A	A	A	A	A	A	A	A
Reset 0x00000000	**0**	**0**	**0**	**0**	**0**	**0**	**0**	**0**	**0**	**0**	**0**	**0**	**0**	**0**	**0**	**0**	**0**	**0**	**0**	**0**	**0**	**0**	**0**	**0**	**0**	**0**	**0**	**0**	**0**	**0**	**0**	**0**

Id	RW	Field	Value Id	Value	Description
A	RW	EEP			Pointer to event register. Accepts only addresses to registers from the Event group.

22.2.25 CH[10].TEP

Address offset: 0x564

Channel 10 task end-point

Bit number	31	30	29	28	27	26	25	24	23	22	21	20	19	18	17	16	15	14	13	12	11	10	9	8	7	6	5	4	3	2	1	0
Id	A	A	A	A	A	A	A	A	A	A	A	A	A	A	A	A	A	A	A	A	A	A	A	A	A	A	A	A	A	A	A	A
Reset 0x00000000	**0**	**0**	**0**	**0**	**0**	**0**	**0**	**0**	**0**	**0**	**0**	**0**	**0**	**0**	**0**	**0**	**0**	**0**	**0**	**0**	**0**	**0**	**0**	**0**	**0**	**0**	**0**	**0**	**0**	**0**	**0**	**0**

Id	RW	Field	Value Id	Value	Description
A	RW	TEP			Pointer to task register. Accepts only addresses to registers from the Task group.

22.2.26 CH[11].EEP

Address offset: 0x568

Channel 11 event end-point

Bit number	31	30	29	28	27	26	25	24	23	22	21	20	19	18	17	16	15	14	13	12	11	10	9	8	7	6	5	4	3	2	1	0
Id	A	A	A	A	A	A	A	A	A	A	A	A	A	A	A	A	A	A	A	A	A	A	A	A	A	A	A	A	A	A	A	A
Reset 0x00000000	**0**	**0**	**0**	**0**	**0**	**0**	**0**	**0**	**0**	**0**	**0**	**0**	**0**	**0**	**0**	**0**	**0**	**0**	**0**	**0**	**0**	**0**	**0**	**0**	**0**	**0**	**0**	**0**	**0**	**0**	**0**	**0**

Id	RW	Field	Value Id	Value	Description
A	RW	EEP			Pointer to event register. Accepts only addresses to registers from the Event group.

22.2.27 CH[11].TEP

Address offset: 0x56C

Channel 11 task end-point

Bit number	31	30	29	28	27	26	25	24	23	22	21	20	19	18	17	16	15	14	13	12	11	10	9	8	7	6	5	4	3	2	1	0
Id	A	A	A	A	A	A	A	A	A	A	A	A	A	A	A	A	A	A	A	A	A	A	A	A	A	A	A	A	A	A	A	A
Reset 0x00000000	**0**	**0**	**0**	**0**	**0**	**0**	**0**	**0**	**0**	**0**	**0**	**0**	**0**	**0**	**0**	**0**	**0**	**0**	**0**	**0**	**0**	**0**	**0**	**0**	**0**	**0**	**0**	**0**	**0**	**0**	**0**	**0**

Id	RW	Field	Value Id	Value	Description
A	RW	TEP			Pointer to task register. Accepts only addresses to registers from the Task group.

22.2.28 CH[12].EEP

Address offset: 0x570

Channel 12 event end-point

Bit number	31	30	29	28	27	26	25	24	23	22	21	20	19	18	17	16	15	14	13	12	11	10	9	8	7	6	5	4	3	2	1	0
Id	A	A	A	A	A	A	A	A	A	A	A	A	A	A	A	A	A	A	A	A	A	A	A	A	A	A	A	A	A	A	A	A
Reset 0x00000000	**0**	**0**	**0**	**0**	**0**	**0**	**0**	**0**	**0**	**0**	**0**	**0**	**0**	**0**	**0**	**0**	**0**	**0**	**0**	**0**	**0**	**0**	**0**	**0**	**0**	**0**	**0**	**0**	**0**	**0**	**0**	**0**

Id	RW	Field	Value Id	Value	Description
A	RW	EEP			Pointer to event register. Accepts only addresses to registers from the Event group.

22.2.29 CH[12].TEP

Address offset: 0x574

Channel 12 task end-point

Bit number	31	30	29	28	27	26	25	24	23	22	21	20	19	18	17	16	15	14	13	12	11	10	9	8	7	6	5	4	3	2	1	0
Id	A	A	A	A	A	A	A	A	A	A	A	A	A	A	A	A	A	A	A	A	A	A	A	A	A	A	A	A	A	A	A	A
Reset 0x00000000	**0**	**0**	**0**	**0**	**0**	**0**	**0**	**0**	**0**	**0**	**0**	**0**	**0**	**0**	**0**	**0**	**0**	**0**	**0**	**0**	**0**	**0**	**0**	**0**	**0**	**0**	**0**	**0**	**0**	**0**	**0**	**0**

Id	RW	Field	Value Id	Value	Description
A	RW	TEP			Pointer to task register. Accepts only addresses to registers from the Task group.

22.2.30 CH[13].EEP

Address offset: 0x578

Channel 13 event end-point

Bit number	31	30	29	28	27	26	25	24	23	22	21	20	19	18	17	16	15	14	13	12	11	10	9	8	7	6	5	4	3	2	1	0
Id	A	A	A	A	A	A	A	A	A	A	A	A	A	A	A	A	A	A	A	A	A	A	A	A	A	A	A	A	A	A	A	A
Reset 0x00000000	**0**	**0**	**0**	**0**	**0**	**0**	**0**	**0**	**0**	**0**	**0**	**0**	**0**	**0**	**0**	**0**	**0**	**0**	**0**	**0**	**0**	**0**	**0**	**0**	**0**	**0**	**0**	**0**	**0**	**0**	**0**	**0**

Id	RW	Field	Value Id	Value	Description
A	RW	EEP			Pointer to event register. Accepts only addresses to registers from the Event group.

22.2.31 CH[13].TEP

Address offset: 0x57C

Channel 13 task end-point

Bit number	31	30	29	28	27	26	25	24	23	22	21	20	19	18	17	16	15	14	13	12	11	10	9	8	7	6	5	4	3	2	1	0
Id	A	A	A	A	A	A	A	A	A	A	A	A	A	A	A	A	A	A	A	A	A	A	A	A	A	A	A	A	A	A	A	A
Reset 0x00000000	**0**	**0**	**0**	**0**	**0**	**0**	**0**	**0**	**0**	**0**	**0**	**0**	**0**	**0**	**0**	**0**	**0**	**0**	**0**	**0**	**0**	**0**	**0**	**0**	**0**	**0**	**0**	**0**	**0**	**0**	**0**	**0**

Id	RW	Field	Value Id	Value	Description
A	RW	TEP			Pointer to task register. Accepts only addresses to registers from the Task group.

22.2.32 CH[14].EEP

Address offset: 0x580

Channel 14 event end-point

Bit number	31	30	29	28	27	26	25	24	23	22	21	20	19	18	17	16	15	14	13	12	11	10	9	8	7	6	5	4	3	2	1	0
Id	A	A	A	A	A	A	A	A	A	A	A	A	A	A	A	A	A	A	A	A	A	A	A	A	A	A	A	A	A	A	A	A
Reset 0x00000000	**0**	**0**	**0**	**0**	**0**	**0**	**0**	**0**	**0**	**0**	**0**	**0**	**0**	**0**	**0**	**0**	**0**	**0**	**0**	**0**	**0**	**0**	**0**	**0**	**0**	**0**	**0**	**0**	**0**	**0**	**0**	**0**

Id	RW	Field	Value Id	Value	Description
A	RW	EEP			Pointer to event register. Accepts only addresses to registers from the Event group.

22.2.33 CH[14].TEP

Address offset: 0x584

Channel 14 task end-point

Bit number	31	30	29	28	27	26	25	24	23	22	21	20	19	18	17	16	15	14	13	12	11	10	9	8	7	6	5	4	3	2	1	0
Id	A	A	A	A	A	A	A	A	A	A	A	A	A	A	A	A	A	A	A	A	A	A	A	A	A	A	A	A	A	A	A	A
Reset 0x00000000	**0**	**0**	**0**	**0**	**0**	**0**	**0**	**0**	**0**	**0**	**0**	**0**	**0**	**0**	**0**	**0**	**0**	**0**	**0**	**0**	**0**	**0**	**0**	**0**	**0**	**0**	**0**	**0**	**0**	**0**	**0**	**0**

Id	RW	Field	Value Id	Value	Description
A	RW	TEP			Pointer to task register. Accepts only addresses to registers from the Task group.

22.2.34 CH[15].EEP

Address offset: 0x588

Channel 15 event end-point

Bit number	31	30	29	28	27	26	25	24	23	22	21	20	19	18	17	16	15	14	13	12	11	10	9	8	7	6	5	4	3	2	1	0
Id	A	A	A	A	A	A	A	A	A	A	A	A	A	A	A	A	A	A	A	A	A	A	A	A	A	A	A	A	A	A	A	A
Reset 0x00000000	**0**	**0**	**0**	**0**	**0**	**0**	**0**	**0**	**0**	**0**	**0**	**0**	**0**	**0**	**0**	**0**	**0**	**0**	**0**	**0**	**0**	**0**	**0**	**0**	**0**	**0**	**0**	**0**	**0**	**0**	**0**	**0**

Id	RW	Field	Value Id	Value	Description
A	RW	EEP			Pointer to event register. Accepts only addresses to registers from the Event group.

22.2.35 CH[15].TEP

Address offset: 0x58C

Channel 15 task end-point

Bit number	31	30	29	28	27	26	25	24	23	22	21	20	19	18	17	16	15	14	13	12	11	10	9	8	7	6	5	4	3	2	1	0
Id	A	A	A	A	A	A	A	A	A	A	A	A	A	A	A	A	A	A	A	A	A	A	A	A	A	A	A	A	A	A	A	A
Reset 0x00000000	**0**	**0**	**0**	**0**	**0**	**0**	**0**	**0**	**0**	**0**	**0**	**0**	**0**	**0**	**0**	**0**	**0**	**0**	**0**	**0**	**0**	**0**	**0**	**0**	**0**	**0**	**0**	**0**	**0**	**0**	**0**	**0**

Id	RW	Field	Value Id	Value	Description
A	RW	TEP			Pointer to task register. Accepts only addresses to registers from the Task group.

22.2.36 CH[16].EEP

Address offset: 0x590

Channel 16 event end-point

Bit number	31	30	29	28	27	26	25	24	23	22	21	20	19	18	17	16	15	14	13	12	11	10	9	8	7	6	5	4	3	2	1	0
Id	A	A	A	A	A	A	A	A	A	A	A	A	A	A	A	A	A	A	A	A	A	A	A	A	A	A	A	A	A	A	A	A
Reset 0x00000000	**0**	**0**	**0**	**0**	**0**	**0**	**0**	**0**	**0**	**0**	**0**	**0**	**0**	**0**	**0**	**0**	**0**	**0**	**0**	**0**	**0**	**0**	**0**	**0**	**0**	**0**	**0**	**0**	**0**	**0**	**0**	**0**

Id	RW	Field	Value Id	Value	Description
A	RW	EEP			Pointer to event register. Accepts only addresses to registers from the Event group.

22.2.37 CH[16].TEP

Address offset: 0x594

Channel 16 task end-point

Bit number	31	30	29	28	27	26	25	24	23	22	21	20	19	18	17	16	15	14	13	12	11	10	9	8	7	6	5	4	3	2	1	0
Id	A	A	A	A	A	A	A	A	A	A	A	A	A	A	A	A	A	A	A	A	A	A	A	A	A	A	A	A	A	A	A	A
Reset 0x00000000	**0**	**0**	**0**	**0**	**0**	**0**	**0**	**0**	**0**	**0**	**0**	**0**	**0**	**0**	**0**	**0**	**0**	**0**	**0**	**0**	**0**	**0**	**0**	**0**	**0**	**0**	**0**	**0**	**0**	**0**	**0**	**0**

Id	RW	Field	Value Id	Value	Description
A	RW	TEP			Pointer to task register. Accepts only addresses to registers from the Task group.

22.2.38 CH[17].EEP

Address offset: 0x598

Channel 17 event end-point

Bit number	31	30	29	28	27	26	25	24	23	22	21	20	19	18	17	16	15	14	13	12	11	10	9	8	7	6	5	4	3	2	1	0
Id	A	A	A	A	A	A	A	A	A	A	A	A	A	A	A	A	A	A	A	A	A	A	A	A	A	A	A	A	A	A	A	A
Reset 0x00000000	**0**	**0**	**0**	**0**	**0**	**0**	**0**	**0**	**0**	**0**	**0**	**0**	**0**	**0**	**0**	**0**	**0**	**0**	**0**	**0**	**0**	**0**	**0**	**0**	**0**	**0**	**0**	**0**	**0**	**0**	**0**	**0**

Id	RW	Field	Value Id	Value	Description
A	RW	EEP			Pointer to event register. Accepts only addresses to registers from the Event group.

22.2.39 CH[17].TEP

Address offset: 0x59C

Channel 17 task end-point

Bit number	31	30	29	28	27	26	25	24	23	22	21	20	19	18	17	16	15	14	13	12	11	10	9	8	7	6	5	4	3	2	1	0
Id	A	A	A	A	A	A	A	A	A	A	A	A	A	A	A	A	A	A	A	A	A	A	A	A	A	A	A	A	A	A	A	A
Reset 0x00000000	**0**	**0**	**0**	**0**	**0**	**0**	**0**	**0**	**0**	**0**	**0**	**0**	**0**	**0**	**0**	**0**	**0**	**0**	**0**	**0**	**0**	**0**	**0**	**0**	**0**	**0**	**0**	**0**	**0**	**0**	**0**	**0**

Id	RW	Field	Value Id	Value	Description
A	RW	TEP			Pointer to task register. Accepts only addresses to registers from the Task group.

22.2.40 CH[18].EEP

Address offset: 0x5A0

Channel 18 event end-point

Bit number	31	30	29	28	27	26	25	24	23	22	21	20	19	18	17	16	15	14	13	12	11	10	9	8	7	6	5	4	3	2	1	0
Id	A	A	A	A	A	A	A	A	A	A	A	A	A	A	A	A	A	A	A	A	A	A	A	A	A	A	A	A	A	A	A	A
Reset 0x00000000	**0**	**0**	**0**	**0**	**0**	**0**	**0**	**0**	**0**	**0**	**0**	**0**	**0**	**0**	**0**	**0**	**0**	**0**	**0**	**0**	**0**	**0**	**0**	**0**	**0**	**0**	**0**	**0**	**0**	**0**	**0**	**0**

Id	RW	Field	Value Id	Value	Description
A	RW	EEP			Pointer to event register. Accepts only addresses to registers from the Event group.

22.2.41 CH[18].TEP

Address offset: 0x5A4

Channel 18 task end-point

Bit number	31	30	29	28	27	26	25	24	23	22	21	20	19	18	17	16	15	14	13	12	11	10	9	8	7	6	5	4	3	2	1	0
Id	A	A	A	A	A	A	A	A	A	A	A	A	A	A	A	A	A	A	A	A	A	A	A	A	A	A	A	A	A	A	A	A
Reset 0x00000000	**0**	**0**	**0**	**0**	**0**	**0**	**0**	**0**	**0**	**0**	**0**	**0**	**0**	**0**	**0**	**0**	**0**	**0**	**0**	**0**	**0**	**0**	**0**	**0**	**0**	**0**	**0**	**0**	**0**	**0**	**0**	**0**

Id	RW	Field	Value Id	Value	Description
A	RW	TEP			Pointer to task register. Accepts only addresses to registers from the Task group.

22.2.42 CH[19].EEP

Address offset: 0x5A8

Channel 19 event end-point

Bit number	31	30	29	28	27	26	25	24	23	22	21	20	19	18	17	16	15	14	13	12	11	10	9	8	7	6	5	4	3	2	1	0
Id	A	A	A	A	A	A	A	A	A	A	A	A	A	A	A	A	A	A	A	A	A	A	A	A	A	A	A	A	A	A	A	A
Reset 0x00000000	**0**	**0**	**0**	**0**	**0**	**0**	**0**	**0**	**0**	**0**	**0**	**0**	**0**	**0**	**0**	**0**	**0**	**0**	**0**	**0**	**0**	**0**	**0**	**0**	**0**	**0**	**0**	**0**	**0**	**0**	**0**	**0**

Id	RW	Field	Value Id	Value	Description
A	RW	EEP			Pointer to event register. Accepts only addresses to registers from the Event group.

22.2.43 CH[19].TEP

Address offset: 0x5AC

Channel 19 task end-point

Bit number	31	30	29	28	27	26	25	24	23	22	21	20	19	18	17	16	15	14	13	12	11	10	9	8	7	6	5	4	3	2	1	0
Id	A	A	A	A	A	A	A	A	A	A	A	A	A	A	A	A	A	A	A	A	A	A	A	A	A	A	A	A	A	A	A	A
Reset 0x00000000	**0**	**0**	**0**	**0**	**0**	**0**	**0**	**0**	**0**	**0**	**0**	**0**	**0**	**0**	**0**	**0**	**0**	**0**	**0**	**0**	**0**	**0**	**0**	**0**	**0**	**0**	**0**	**0**	**0**	**0**	**0**	**0**

Id	RW	Field	Value Id	Value	Description
A	RW	TEP			Pointer to task register. Accepts only addresses to registers from the Task group.

22.2.44 CHG[0]

Address offset: 0x800

Channel group 0

Bit number	31	30	29	28	27	26	25	24	23	22	21	20	19	18	17	16	15	14	13	12	11	10	9	8	7	6	5	4	3	2	1	0
Id	f	e	d	c	b	a	Z	Y	X	W	V	U	T	S	R	Q	P	O	N	M	L	K	J	I	H	G	F	E	D	C	B	A
Reset 0x00000000	**0**	**0**	**0**	**0**	**0**	**0**	**0**	**0**	**0**	**0**	**0**	**0**	**0**	**0**	**0**	**0**	**0**	**0**	**0**	**0**	**0**	**0**	**0**	**0**	**0**	**0**	**0**	**0**	**0**	**0**	**0**	**0**

Id	RW	Field	Value Id	Value	Description
A	RW	CH0			Include or exclude channel 0
			Excluded	0	Exclude
			Included	1	Include
B	RW	CH1			Include or exclude channel 1
			Excluded	0	Exclude
			Included	1	Include
C	RW	CH2			Include or exclude channel 2
			Excluded	0	Exclude
			Included	1	Include
D	RW	CH3			Include or exclude channel 3
			Excluded	0	Exclude
			Included	1	Include
E	RW	CH4			Include or exclude channel 4
			Excluded	0	Exclude
			Included	1	Include
F	RW	CH5			Include or exclude channel 5
			Excluded	0	Exclude
			Included	1	Include
G	RW	CH6			Include or exclude channel 6
			Excluded	0	Exclude
			Included	1	Include
H	RW	CH7			Include or exclude channel 7
			Excluded	0	Exclude
			Included	1	Include
I	RW	CH8			Include or exclude channel 8
			Excluded	0	Exclude

Bit number				31	30	29	28	27	26	25	24	23	22	21	20	19	18	17	16	15	14	13	12	11	10	9	8	7	6	5	4	3	2	1	0
Id				f	e	d	c	b	a	Z	Y	X	W	V	U	T	S	R	Q	P	O	N	M	L	K	J	I	H	G	F	E	D	C	B	A
Reset 0x00000000				**0**	**0**	**0**	**0**	**0**	**0**	**0**	**0**	**0**	**0**	**0**	**0**	**0**	**0**	**0**	**0**	**0**	**0**	**0**	**0**	**0**	**0**	**0**	**0**	**0**	**0**	**0**	**0**	**0**	**0**	**0**	**0**
Id	**RW**	**Field**	**Value Id**	**Value**								**Description**																							
			Included	1								Include																							
J	RW	CH9										Include or exclude channel 9																							
			Excluded	0								Exclude																							
			Included	1								Include																							
K	RW	CH10										Include or exclude channel 10																							
			Excluded	0								Exclude																							
			Included	1								Include																							
L	RW	CH11										Include or exclude channel 11																							
			Excluded	0								Exclude																							
			Included	1								Include																							
M	RW	CH12										Include or exclude channel 12																							
			Excluded	0								Exclude																							
			Included	1								Include																							
N	RW	CH13										Include or exclude channel 13																							
			Excluded	0								Exclude																							
			Included	1								Include																							
O	RW	CH14										Include or exclude channel 14																							
			Excluded	0								Exclude																							
			Included	1								Include																							
P	RW	CH15										Include or exclude channel 15																							
			Excluded	0								Exclude																							
			Included	1								Include																							
Q	RW	CH16										Include or exclude channel 16																							
			Excluded	0								Exclude																							
			Included	1								Include																							
R	RW	CH17										Include or exclude channel 17																							
			Excluded	0								Exclude																							
			Included	1								Include																							
S	RW	CH18										Include or exclude channel 18																							
			Excluded	0								Exclude																							
			Included	1								Include																							
T	RW	CH19										Include or exclude channel 19																							
			Excluded	0								Exclude																							
			Included	1								Include																							
U	RW	CH20										Include or exclude channel 20																							
			Excluded	0								Exclude																							
			Included	1								Include																							
V	RW	CH21										Include or exclude channel 21																							
			Excluded	0								Exclude																							
			Included	1								Include																							
W	RW	CH22										Include or exclude channel 22																							
			Excluded	0								Exclude																							
			Included	1								Include																							
X	RW	CH23										Include or exclude channel 23																							
			Excluded	0								Exclude																							
			Included	1								Include																							
Y	RW	CH24										Include or exclude channel 24																							
			Excluded	0								Exclude																							
			Included	1								Include																							
Z	RW	CH25										Include or exclude channel 25																							
			Excluded	0								Exclude																							
			Included	1								Include																							
a	RW	CH26										Include or exclude channel 26																							
			Excluded	0								Exclude																							
			Included	1								Include																							

Bit number				31	30	29	28	27	26	25	24	23	22	21	20	19	18	17	16	15	14	13	12	11	10	9	8	7	6	5	4	3	2	1	0
Id				f	e	d	c	b	a	Z	Y	X	W	V	U	T	S	R	Q	P	O	N	M	L	K	J	I	H	G	F	E	D	C	B	A
Reset 0x00000000				**0**	**0**	**0**	**0**	**0**	**0**	**0**	**0**	**0**	**0**	**0**	**0**	**0**	**0**	**0**	**0**	**0**	**0**	**0**	**0**	**0**	**0**	**0**	**0**	**0**	**0**	**0**	**0**	**0**	**0**	**0**	**0**
Id	**RW**	**Field**	**Value Id**	**Value**								**Description**																							
b	RW	CH27										Include or exclude channel 27																							
			Excluded	0								Exclude																							
			Included	1								Include																							
c	RW	CH28										Include or exclude channel 28																							
			Excluded	0								Exclude																							
			Included	1								Include																							
d	RW	CH29										Include or exclude channel 29																							
			Excluded	0								Exclude																							
			Included	1								Include																							
e	RW	CH30										Include or exclude channel 30																							
			Excluded	0								Exclude																							
			Included	1								Include																							
f	RW	CH31										Include or exclude channel 31																							
			Excluded	0								Exclude																							
			Included	1								Include																							

22.2.45 CHG[1]

Address offset: 0x804

Channel group 1

Bit number				31	30	29	28	27	26	25	24	23	22	21	20	19	18	17	16	15	14	13	12	11	10	9	8	7	6	5	4	3	2	1	0
Id				f	e	d	c	b	a	Z	Y	X	W	V	U	T	S	R	Q	P	O	N	M	L	K	J	I	H	G	F	E	D	C	B	A
Reset 0x00000000				**0**	**0**	**0**	**0**	**0**	**0**	**0**	**0**	**0**	**0**	**0**	**0**	**0**	**0**	**0**	**0**	**0**	**0**	**0**	**0**	**0**	**0**	**0**	**0**	**0**	**0**	**0**	**0**	**0**	**0**	**0**	**0**
Id	**RW**	**Field**	**Value Id**	**Value**								**Description**																							
A	RW	CH0										Include or exclude channel 0																							
			Excluded	0								Exclude																							
			Included	1								Include																							
B	RW	CH1										Include or exclude channel 1																							
			Excluded	0								Exclude																							
			Included	1								Include																							
C	RW	CH2										Include or exclude channel 2																							
			Excluded	0								Exclude																							
			Included	1								Include																							
D	RW	CH3										Include or exclude channel 3																							
			Excluded	0								Exclude																							
			Included	1								Include																							
E	RW	CH4										Include or exclude channel 4																							
			Excluded	0								Exclude																							
			Included	1								Include																							
F	RW	CH5										Include or exclude channel 5																							
			Excluded	0								Exclude																							
			Included	1								Include																							
G	RW	CH6										Include or exclude channel 6																							
			Excluded	0								Exclude																							
			Included	1								Include																							
H	RW	CH7										Include or exclude channel 7																							
			Excluded	0								Exclude																							
			Included	1								Include																							
I	RW	CH8										Include or exclude channel 8																							
			Excluded	0								Exclude																							
			Included	1								Include																							
J	RW	CH9										Include or exclude channel 9																							
			Excluded	0								Exclude																							
			Included	1								Include																							

Bit number				31	30	29	28	27	26	25	24	23	22	21	20	19	18	17	16	15	14	13	12	11	10	9	8	7	6	5	4	3	2	1	0
Id				f	e	d	c	b	a	Z	Y	X	W	V	U	T	S	R	Q	P	O	N	M	L	K	J	I	H	G	F	E	D	C	B	A
Reset 0x00000000				**0**	**0**	**0**	**0**	**0**	**0**	**0**	**0**	**0**	**0**	**0**	**0**	**0**	**0**	**0**	**0**	**0**	**0**	**0**	**0**	**0**	**0**	**0**	**0**	**0**	**0**	**0**	**0**	**0**	**0**	**0**	**0**
Id	**RW**	**Field**	**Value Id**	**Value**								**Description**																							
K	RW	CH10										Include or exclude channel 10																							
			Excluded	0								Exclude																							
			Included	1								Include																							
L	RW	CH11										Include or exclude channel 11																							
			Excluded	0								Exclude																							
			Included	1								Include																							
M	RW	CH12										Include or exclude channel 12																							
			Excluded	0								Exclude																							
			Included	1								Include																							
N	RW	CH13										Include or exclude channel 13																							
			Excluded	0								Exclude																							
			Included	1								Include																							
O	RW	CH14										Include or exclude channel 14																							
			Excluded	0								Exclude																							
			Included	1								Include																							
P	RW	CH15										Include or exclude channel 15																							
			Excluded	0								Exclude																							
			Included	1								Include																							
Q	RW	CH16										Include or exclude channel 16																							
			Excluded	0								Exclude																							
			Included	1								Include																							
R	RW	CH17										Include or exclude channel 17																							
			Excluded	0								Exclude																							
			Included	1								Include																							
S	RW	CH18										Include or exclude channel 18																							
			Excluded	0								Exclude																							
			Included	1								Include																							
T	RW	CH19										Include or exclude channel 19																							
			Excluded	0								Exclude																							
			Included	1								Include																							
U	RW	CH20										Include or exclude channel 20																							
			Excluded	0								Exclude																							
			Included	1								Include																							
V	RW	CH21										Include or exclude channel 21																							
			Excluded	0								Exclude																							
			Included	1								Include																							
W	RW	CH22										Include or exclude channel 22																							
			Excluded	0								Exclude																							
			Included	1								Include																							
X	RW	CH23										Include or exclude channel 23																							
			Excluded	0								Exclude																							
			Included	1								Include																							
Y	RW	CH24										Include or exclude channel 24																							
			Excluded	0								Exclude																							
			Included	1								Include																							
Z	RW	CH25										Include or exclude channel 25																							
			Excluded	0								Exclude																							
			Included	1								Include																							
a	RW	CH26										Include or exclude channel 26																							
			Excluded	0								Exclude																							
			Included	1								Include																							
b	RW	CH27										Include or exclude channel 27																							
			Excluded	0								Exclude																							
			Included	1								Include																							
c	RW	CH28										Include or exclude channel 28																							

Bit number				31	30	29	28	27	26	25	24	23	22	21	20	19	18	17	16	15	14	13	12	11	10	9	8	7	6	5	4	3	2	1	0
Id				f	e	d	c	b	a	Z	Y	X	W	V	U	T	S	R	Q	P	O	N	M	L	K	J	I	H	G	F	E	D	C	B	A
Reset 0x00000000				**0**	**0**	**0**	**0**	**0**	**0**	**0**	**0**	**0**	**0**	**0**	**0**	**0**	**0**	**0**	**0**	**0**	**0**	**0**	**0**	**0**	**0**	**0**	**0**	**0**	**0**	**0**	**0**	**0**	**0**	**0**	**0**
Id	**RW**	**Field**	**Value Id**	**Value**								**Description**																							
			Excluded	0								Exclude																							
			Included	1								Include																							
d	RW	CH29										Include or exclude channel 29																							
			Excluded	0								Exclude																							
			Included	1								Include																							
e	RW	CH30										Include or exclude channel 30																							
			Excluded	0								Exclude																							
			Included	1								Include																							
f	RW	CH31										Include or exclude channel 31																							
			Excluded	0								Exclude																							
			Included	1								Include																							

22.2.46 CHG[2]

Address offset: 0x808

Channel group 2

Bit number				31	30	29	28	27	26	25	24	23	22	21	20	19	18	17	16	15	14	13	12	11	10	9	8	7	6	5	4	3	2	1	0
Id				f	e	d	c	b	a	Z	Y	X	W	V	U	T	S	R	Q	P	O	N	M	L	K	J	I	H	G	F	E	D	C	B	A
Reset 0x00000000				**0**	**0**	**0**	**0**	**0**	**0**	**0**	**0**	**0**	**0**	**0**	**0**	**0**	**0**	**0**	**0**	**0**	**0**	**0**	**0**	**0**	**0**	**0**	**0**	**0**	**0**	**0**	**0**	**0**	**0**	**0**	**0**
Id	**RW**	**Field**	**Value Id**	**Value**								**Description**																							
A	RW	CH0										Include or exclude channel 0																							
			Excluded	0								Exclude																							
			Included	1								Include																							
B	RW	CH1										Include or exclude channel 1																							
			Excluded	0								Exclude																							
			Included	1								Include																							
C	RW	CH2										Include or exclude channel 2																							
			Excluded	0								Exclude																							
			Included	1								Include																							
D	RW	CH3										Include or exclude channel 3																							
			Excluded	0								Exclude																							
			Included	1								Include																							
E	RW	CH4										Include or exclude channel 4																							
			Excluded	0								Exclude																							
			Included	1								Include																							
F	RW	CH5										Include or exclude channel 5																							
			Excluded	0								Exclude																							
			Included	1								Include																							
G	RW	CH6										Include or exclude channel 6																							
			Excluded	0								Exclude																							
			Included	1								Include																							
H	RW	CH7										Include or exclude channel 7																							
			Excluded	0								Exclude																							
			Included	1								Include																							
I	RW	CH8										Include or exclude channel 8																							
			Excluded	0								Exclude																							
			Included	1								Include																							
J	RW	CH9										Include or exclude channel 9																							
			Excluded	0								Exclude																							
			Included	1								Include																							
K	RW	CH10										Include or exclude channel 10																							
			Excluded	0								Exclude																							
			Included	1								Include																							
L	RW	CH11										Include or exclude channel 11																							

Bit number				31	30	29	28	27	26	25	24	23	22	21	20	19	18	17	16	15	14	13	12	11	10	9	8	7	6	5	4	3	2	1	0
Id				f	e	d	c	b	a	Z	Y	X	W	V	U	T	S	R	Q	P	O	N	M	L	K	J	I	H	G	F	E	D	C	B	A
Reset 0x00000000				**0**	**0**	**0**	**0**	**0**	**0**	**0**	**0**	**0**	**0**	**0**	**0**	**0**	**0**	**0**	**0**	**0**	**0**	**0**	**0**	**0**	**0**	**0**	**0**	**0**	**0**	**0**	**0**	**0**	**0**	**0**	**0**
Id	**RW**	**Field**	**Value Id**	**Value**								**Description**																							
			Excluded	0								Exclude																							
			Included	1								Include																							
M	RW	CH12										Include or exclude channel 12																							
			Excluded	0								Exclude																							
			Included	1								Include																							
N	RW	CH13										Include or exclude channel 13																							
			Excluded	0								Exclude																							
			Included	1								Include																							
O	RW	CH14										Include or exclude channel 14																							
			Excluded	0								Exclude																							
			Included	1								Include																							
P	RW	CH15										Include or exclude channel 15																							
			Excluded	0								Exclude																							
			Included	1								Include																							
Q	RW	CH16										Include or exclude channel 16																							
			Excluded	0								Exclude																							
			Included	1								Include																							
R	RW	CH17										Include or exclude channel 17																							
			Excluded	0								Exclude																							
			Included	1								Include																							
S	RW	CH18										Include or exclude channel 18																							
			Excluded	0								Exclude																							
			Included	1								Include																							
T	RW	CH19										Include or exclude channel 19																							
			Excluded	0								Exclude																							
			Included	1								Include																							
U	RW	CH20										Include or exclude channel 20																							
			Excluded	0								Exclude																							
			Included	1								Include																							
V	RW	CH21										Include or exclude channel 21																							
			Excluded	0								Exclude																							
			Included	1								Include																							
W	RW	CH22										Include or exclude channel 22																							
			Excluded	0								Exclude																							
			Included	1								Include																							
X	RW	CH23										Include or exclude channel 23																							
			Excluded	0								Exclude																							
			Included	1								Include																							
Y	RW	CH24										Include or exclude channel 24																							
			Excluded	0								Exclude																							
			Included	1								Include																							
Z	RW	CH25										Include or exclude channel 25																							
			Excluded	0								Exclude																							
			Included	1								Include																							
a	RW	CH26										Include or exclude channel 26																							
			Excluded	0								Exclude																							
			Included	1								Include																							
b	RW	CH27										Include or exclude channel 27																							
			Excluded	0								Exclude																							
			Included	1								Include																							
c	RW	CH28										Include or exclude channel 28																							
			Excluded	0								Exclude																							
			Included	1								Include																							
d	RW	CH29										Include or exclude channel 29																							
			Excluded	0								Exclude																							

Bit number				31	30	29	28	27	26	25	24	23	22	21	20	19	18	17	16	15	14	13	12	11	10	9	8	7	6	5	4	3	2	1	0
Id				f	e	d	c	b	a	Z	Y	X	W	V	U	T	S	R	Q	P	O	N	M	L	K	J	I	H	G	F	E	D	C	B	A
Reset 0x00000000				**0**	**0**	**0**	**0**	**0**	**0**	**0**	**0**	**0**	**0**	**0**	**0**	**0**	**0**	**0**	**0**	**0**	**0**	**0**	**0**	**0**	**0**	**0**	**0**	**0**	**0**	**0**	**0**	**0**	**0**	**0**	**0**
Id	**RW**	**Field**	**Value Id**	**Value**								**Description**																							
			Included	1								Include																							
e	RW	CH30										Include or exclude channel 30																							
			Excluded	0								Exclude																							
			Included	1								Include																							
f	RW	CH31										Include or exclude channel 31																							
			Excluded	0								Exclude																							
			Included	1								Include																							

22.2.47 CHG[3]

Address offset: 0x80C

Channel group 3

Bit number				31	30	29	28	27	26	25	24	23	22	21	20	19	18	17	16	15	14	13	12	11	10	9	8	7	6	5	4	3	2	1	0
Id				f	e	d	c	b	a	Z	Y	X	W	V	U	T	S	R	Q	P	O	N	M	L	K	J	I	H	G	F	E	D	C	B	A
Reset 0x00000000				**0**	**0**	**0**	**0**	**0**	**0**	**0**	**0**	**0**	**0**	**0**	**0**	**0**	**0**	**0**	**0**	**0**	**0**	**0**	**0**	**0**	**0**	**0**	**0**	**0**	**0**	**0**	**0**	**0**	**0**	**0**	**0**
Id	**RW**	**Field**	**Value Id**	**Value**								**Description**																							
A	RW	CH0										Include or exclude channel 0																							
			Excluded	0								Exclude																							
			Included	1								Include																							
B	RW	CH1										Include or exclude channel 1																							
			Excluded	0								Exclude																							
			Included	1								Include																							
C	RW	CH2										Include or exclude channel 2																							
			Excluded	0								Exclude																							
			Included	1								Include																							
D	RW	CH3										Include or exclude channel 3																							
			Excluded	0								Exclude																							
			Included	1								Include																							
E	RW	CH4										Include or exclude channel 4																							
			Excluded	0								Exclude																							
			Included	1								Include																							
F	RW	CH5										Include or exclude channel 5																							
			Excluded	0								Exclude																							
			Included	1								Include																							
G	RW	CH6										Include or exclude channel 6																							
			Excluded	0								Exclude																							
			Included	1								Include																							
H	RW	CH7										Include or exclude channel 7																							
			Excluded	0								Exclude																							
			Included	1								Include																							
I	RW	CH8										Include or exclude channel 8																							
			Excluded	0								Exclude																							
			Included	1								Include																							
J	RW	CH9										Include or exclude channel 9																							
			Excluded	0								Exclude																							
			Included	1								Include																							
K	RW	CH10										Include or exclude channel 10																							
			Excluded	0								Exclude																							
			Included	1								Include																							
L	RW	CH11										Include or exclude channel 11																							
			Excluded	0								Exclude																							
			Included	1								Include																							
M	RW	CH12										Include or exclude channel 12																							
			Excluded	0								Exclude																							

Bit number				31	30	29	28	27	26	25	24	23	22	21	20	19	18	17	16	15	14	13	12	11	10	9	8	7	6	5	4	3	2	1	0
Id				f	e	d	c	b	a	Z	Y	X	W	V	U	T	S	R	Q	P	O	N	M	L	K	J	I	H	G	F	E	D	C	B	A
Reset 0x00000000				**0**	**0**	**0**	**0**	**0**	**0**	**0**	**0**	**0**	**0**	**0**	**0**	**0**	**0**	**0**	**0**	**0**	**0**	**0**	**0**	**0**	**0**	**0**	**0**	**0**	**0**	**0**	**0**	**0**	**0**	**0**	**0**
Id	**RW**	**Field**	**Value Id**	**Value**								**Description**																							
			Included	1								Include																							
N	RW	CH13										Include or exclude channel 13																							
			Excluded	0								Exclude																							
			Included	1								Include																							
O	RW	CH14										Include or exclude channel 14																							
			Excluded	0								Exclude																							
			Included	1								Include																							
P	RW	CH15										Include or exclude channel 15																							
			Excluded	0								Exclude																							
			Included	1								Include																							
Q	RW	CH16										Include or exclude channel 16																							
			Excluded	0								Exclude																							
			Included	1								Include																							
R	RW	CH17										Include or exclude channel 17																							
			Excluded	0								Exclude																							
			Included	1								Include																							
S	RW	CH18										Include or exclude channel 18																							
			Excluded	0								Exclude																							
			Included	1								Include																							
T	RW	CH19										Include or exclude channel 19																							
			Excluded	0								Exclude																							
			Included	1								Include																							
U	RW	CH20										Include or exclude channel 20																							
			Excluded	0								Exclude																							
			Included	1								Include																							
V	RW	CH21										Include or exclude channel 21																							
			Excluded	0								Exclude																							
			Included	1								Include																							
W	RW	CH22										Include or exclude channel 22																							
			Excluded	0								Exclude																							
			Included	1								Include																							
X	RW	CH23										Include or exclude channel 23																							
			Excluded	0								Exclude																							
			Included	1								Include																							
Y	RW	CH24										Include or exclude channel 24																							
			Excluded	0								Exclude																							
			Included	1								Include																							
Z	RW	CH25										Include or exclude channel 25																							
			Excluded	0								Exclude																							
			Included	1								Include																							
a	RW	CH26										Include or exclude channel 26																							
			Excluded	0								Exclude																							
			Included	1								Include																							
b	RW	CH27										Include or exclude channel 27																							
			Excluded	0								Exclude																							
			Included	1								Include																							
c	RW	CH28										Include or exclude channel 28																							
			Excluded	0								Exclude																							
			Included	1								Include																							
d	RW	CH29										Include or exclude channel 29																							
			Excluded	0								Exclude																							
			Included	1								Include																							
e	RW	CH30										Include or exclude channel 30																							
			Excluded	0								Exclude																							
			Included	1								Include																							

Bit number				31	30	29	28	27	26	25	24	23	22	21	20	19	18	17	16	15	14	13	12	11	10	9	8	7	6	5	4	3	2	1	0
Id				f	e	d	c	b	a	Z	Y	X	W	V	U	T	S	R	Q	P	O	N	M	L	K	J	I	H	G	F	E	D	C	B	A
Reset 0x00000000				**0**	**0**	**0**	**0**	**0**	**0**	**0**	**0**	**0**	**0**	**0**	**0**	**0**	**0**	**0**	**0**	**0**	**0**	**0**	**0**	**0**	**0**	**0**	**0**	**0**	**0**	**0**	**0**	**0**	**0**	**0**	**0**
Id	**RW**	**Field**	**Value Id**	**Value**								**Description**																							
f	RW	CH31										Include or exclude channel 31																							
			Excluded	0								Exclude																							
			Included	1								Include																							

22.2.48 CHG[4]

Address offset: 0x810

Channel group 4

Bit number				31	30	29	28	27	26	25	24	23	22	21	20	19	18	17	16	15	14	13	12	11	10	9	8	7	6	5	4	3	2	1	0
Id				f	e	d	c	b	a	Z	Y	X	W	V	U	T	S	R	Q	P	O	N	M	L	K	J	I	H	G	F	E	D	C	B	A
Reset 0x00000000				**0**	**0**	**0**	**0**	**0**	**0**	**0**	**0**	**0**	**0**	**0**	**0**	**0**	**0**	**0**	**0**	**0**	**0**	**0**	**0**	**0**	**0**	**0**	**0**	**0**	**0**	**0**	**0**	**0**	**0**	**0**	**0**
Id	**RW**	**Field**	**Value Id**	**Value**								**Description**																							
A	RW	CH0										Include or exclude channel 0																							
			Excluded	0								Exclude																							
			Included	1								Include																							
B	RW	CH1										Include or exclude channel 1																							
			Excluded	0								Exclude																							
			Included	1								Include																							
C	RW	CH2										Include or exclude channel 2																							
			Excluded	0								Exclude																							
			Included	1								Include																							
D	RW	CH3										Include or exclude channel 3																							
			Excluded	0								Exclude																							
			Included	1								Include																							
E	RW	CH4										Include or exclude channel 4																							
			Excluded	0								Exclude																							
			Included	1								Include																							
F	RW	CH5										Include or exclude channel 5																							
			Excluded	0								Exclude																							
			Included	1								Include																							
G	RW	CH6										Include or exclude channel 6																							
			Excluded	0								Exclude																							
			Included	1								Include																							
H	RW	CH7										Include or exclude channel 7																							
			Excluded	0								Exclude																							
			Included	1								Include																							
I	RW	CH8										Include or exclude channel 8																							
			Excluded	0								Exclude																							
			Included	1								Include																							
J	RW	CH9										Include or exclude channel 9																							
			Excluded	0								Exclude																							
			Included	1								Include																							
K	RW	CH10										Include or exclude channel 10																							
			Excluded	0								Exclude																							
			Included	1								Include																							
L	RW	CH11										Include or exclude channel 11																							
			Excluded	0								Exclude																							
			Included	1								Include																							
M	RW	CH12										Include or exclude channel 12																							
			Excluded	0								Exclude																							
			Included	1								Include																							
N	RW	CH13										Include or exclude channel 13																							
			Excluded	0								Exclude																							
			Included	1								Include																							

Bit number				31	30	29	28	27	26	25	24	23	22	21	20	19	18	17	16	15	14	13	12	11	10	9	8	7	6	5	4	3	2	1	0
Id				f	e	d	c	b	a	Z	Y	X	W	V	U	T	S	R	Q	P	O	N	M	L	K	J	I	H	G	F	E	D	C	B	A
Reset 0x00000000				**0**	**0**	**0**	**0**	**0**	**0**	**0**	**0**	**0**	**0**	**0**	**0**	**0**	**0**	**0**	**0**	**0**	**0**	**0**	**0**	**0**	**0**	**0**	**0**	**0**	**0**	**0**	**0**	**0**	**0**	**0**	**0**
Id	**RW**	**Field**	**Value Id**	**Value**								**Description**																							
O	RW	CH14										Include or exclude channel 14																							
			Excluded	0								Exclude																							
			Included	1								Include																							
P	RW	CH15										Include or exclude channel 15																							
			Excluded	0								Exclude																							
			Included	1								Include																							
Q	RW	CH16										Include or exclude channel 16																							
			Excluded	0								Exclude																							
			Included	1								Include																							
R	RW	CH17										Include or exclude channel 17																							
			Excluded	0								Exclude																							
			Included	1								Include																							
S	RW	CH18										Include or exclude channel 18																							
			Excluded	0								Exclude																							
			Included	1								Include																							
T	RW	CH19										Include or exclude channel 19																							
			Excluded	0								Exclude																							
			Included	1								Include																							
U	RW	CH20										Include or exclude channel 20																							
			Excluded	0								Exclude																							
			Included	1								Include																							
V	RW	CH21										Include or exclude channel 21																							
			Excluded	0								Exclude																							
			Included	1								Include																							
W	RW	CH22										Include or exclude channel 22																							
			Excluded	0								Exclude																							
			Included	1								Include																							
X	RW	CH23										Include or exclude channel 23																							
			Excluded	0								Exclude																							
			Included	1								Include																							
Y	RW	CH24										Include or exclude channel 24																							
			Excluded	0								Exclude																							
			Included	1								Include																							
Z	RW	CH25										Include or exclude channel 25																							
			Excluded	0								Exclude																							
			Included	1								Include																							
a	RW	CH26										Include or exclude channel 26																							
			Excluded	0								Exclude																							
			Included	1								Include																							
b	RW	CH27										Include or exclude channel 27																							
			Excluded	0								Exclude																							
			Included	1								Include																							
c	RW	CH28										Include or exclude channel 28																							
			Excluded	0								Exclude																							
			Included	1								Include																							
d	RW	CH29										Include or exclude channel 29																							
			Excluded	0								Exclude																							
			Included	1								Include																							
e	RW	CH30										Include or exclude channel 30																							
			Excluded	0								Exclude																							
			Included	1								Include																							
f	RW	CH31										Include or exclude channel 31																							
			Excluded	0								Exclude																							
			Included	1								Include																							

22.2.49 CHG[5]

Address offset: 0x814

Channel group 5

Bit number	31	30	29	28	27	26	25	24	23	22	21	20	19	18	17	16	15	14	13	12	11	10	9	8	7	6	5	4	3	2	1	0
Id	f	e	d	c	b	a	Z	Y	X	W	V	U	T	S	R	Q	P	O	N	M	L	K	J	I	H	G	F	E	D	C	B	A
Reset 0x00000000	**0**	**0**	**0**	**0**	**0**	**0**	**0**	**0**	**0**	**0**	**0**	**0**	**0**	**0**	**0**	**0**	**0**	**0**	**0**	**0**	**0**	**0**	**0**	**0**	**0**	**0**	**0**	**0**	**0**	**0**	**0**	**0**

Id	RW	Field	Value Id	Value	Description
A	RW	CH0			Include or exclude channel 0
			Excluded	0	Exclude
			Included	1	Include
B	RW	CH1			Include or exclude channel 1
			Excluded	0	Exclude
			Included	1	Include
C	RW	CH2			Include or exclude channel 2
			Excluded	0	Exclude
			Included	1	Include
D	RW	CH3			Include or exclude channel 3
			Excluded	0	Exclude
			Included	1	Include
E	RW	CH4			Include or exclude channel 4
			Excluded	0	Exclude
			Included	1	Include
F	RW	CH5			Include or exclude channel 5
			Excluded	0	Exclude
			Included	1	Include
G	RW	CH6			Include or exclude channel 6
			Excluded	0	Exclude
			Included	1	Include
H	RW	CH7			Include or exclude channel 7
			Excluded	0	Exclude
			Included	1	Include
I	RW	CH8			Include or exclude channel 8
			Excluded	0	Exclude
			Included	1	Include
J	RW	CH9			Include or exclude channel 9
			Excluded	0	Exclude
			Included	1	Include
K	RW	CH10			Include or exclude channel 10
			Excluded	0	Exclude
			Included	1	Include
L	RW	CH11			Include or exclude channel 11
			Excluded	0	Exclude
			Included	1	Include
M	RW	CH12			Include or exclude channel 12
			Excluded	0	Exclude
			Included	1	Include
N	RW	CH13			Include or exclude channel 13
			Excluded	0	Exclude
			Included	1	Include
O	RW	CH14			Include or exclude channel 14
			Excluded	0	Exclude
			Included	1	Include
P	RW	CH15			Include or exclude channel 15
			Excluded	0	Exclude
			Included	1	Include
Q	RW	CH16			Include or exclude channel 16
			Excluded	0	Exclude

Bit number				31	30	29	28	27	26	25	24	23	22	21	20	19	18	17	16	15	14	13	12	11	10	9	8	7	6	5	4	3	2	1	0
Id				f	e	d	c	b	a	Z	Y	X	W	V	U	T	S	R	Q	P	O	N	M	L	K	J	I	H	G	F	E	D	C	B	A
Reset 0x00000000				**0**	**0**	**0**	**0**	**0**	**0**	**0**	**0**	**0**	**0**	**0**	**0**	**0**	**0**	**0**	**0**	**0**	**0**	**0**	**0**	**0**	**0**	**0**	**0**	**0**	**0**	**0**	**0**	**0**	**0**	**0**	**0**
Id	**RW**	**Field**	**Value Id**	**Value**								**Description**																							
			Included	1								Include																							
R	RW	CH17										Include or exclude channel 17																							
			Excluded	0								Exclude																							
			Included	1								Include																							
S	RW	CH18										Include or exclude channel 18																							
			Excluded	0								Exclude																							
			Included	1								Include																							
T	RW	CH19										Include or exclude channel 19																							
			Excluded	0								Exclude																							
			Included	1								Include																							
U	RW	CH20										Include or exclude channel 20																							
			Excluded	0								Exclude																							
			Included	1								Include																							
V	RW	CH21										Include or exclude channel 21																							
			Excluded	0								Exclude																							
			Included	1								Include																							
W	RW	CH22										Include or exclude channel 22																							
			Excluded	0								Exclude																							
			Included	1								Include																							
X	RW	CH23										Include or exclude channel 23																							
			Excluded	0								Exclude																							
			Included	1								Include																							
Y	RW	CH24										Include or exclude channel 24																							
			Excluded	0								Exclude																							
			Included	1								Include																							
Z	RW	CH25										Include or exclude channel 25																							
			Excluded	0								Exclude																							
			Included	1								Include																							
a	RW	CH26										Include or exclude channel 26																							
			Excluded	0								Exclude																							
			Included	1								Include																							
b	RW	CH27										Include or exclude channel 27																							
			Excluded	0								Exclude																							
			Included	1								Include																							
c	RW	CH28										Include or exclude channel 28																							
			Excluded	0								Exclude																							
			Included	1								Include																							
d	RW	CH29										Include or exclude channel 29																							
			Excluded	0								Exclude																							
			Included	1								Include																							
e	RW	CH30										Include or exclude channel 30																							
			Excluded	0								Exclude																							
			Included	1								Include																							
f	RW	CH31										Include or exclude channel 31																							
			Excluded	0								Exclude																							
			Included	1								Include																							

22.2.50 FORK[0].TEP

Address offset: 0x910

Channel 0 task end-point

Bit number	31	30	29	28	27	26	25	24	23	22	21	20	19	18	17	16	15	14	13	12	11	10	9	8	7	6	5	4	3	2	1	0
Id	A	A	A	A	A	A	A	A	A	A	A	A	A	A	A	A	A	A	A	A	A	A	A	A	A	A	A	A	A	A	A	A
Reset 0x00000000	**0**	**0**	**0**	**0**	**0**	**0**	**0**	**0**	**0**	**0**	**0**	**0**	**0**	**0**	**0**	**0**	**0**	**0**	**0**	**0**	**0**	**0**	**0**	**0**	**0**	**0**	**0**	**0**	**0**	**0**	**0**	**0**

Id	RW	Field	Value Id	Value	Description
A	RW	TEP			Pointer to task register

22.2.51 FORK[1].TEP

Address offset: 0x914

Channel 1 task end-point

Bit number	31	30	29	28	27	26	25	24	23	22	21	20	19	18	17	16	15	14	13	12	11	10	9	8	7	6	5	4	3	2	1	0
Id	A	A	A	A	A	A	A	A	A	A	A	A	A	A	A	A	A	A	A	A	A	A	A	A	A	A	A	A	A	A	A	A
Reset 0x00000000	**0**	**0**	**0**	**0**	**0**	**0**	**0**	**0**	**0**	**0**	**0**	**0**	**0**	**0**	**0**	**0**	**0**	**0**	**0**	**0**	**0**	**0**	**0**	**0**	**0**	**0**	**0**	**0**	**0**	**0**	**0**	**0**

Id	RW	Field	Value Id	Value	Description
A	RW	TEP			Pointer to task register

22.2.52 FORK[2].TEP

Address offset: 0x918

Channel 2 task end-point

Bit number	31	30	29	28	27	26	25	24	23	22	21	20	19	18	17	16	15	14	13	12	11	10	9	8	7	6	5	4	3	2	1	0
Id	A	A	A	A	A	A	A	A	A	A	A	A	A	A	A	A	A	A	A	A	A	A	A	A	A	A	A	A	A	A	A	A
Reset 0x00000000	**0**	**0**	**0**	**0**	**0**	**0**	**0**	**0**	**0**	**0**	**0**	**0**	**0**	**0**	**0**	**0**	**0**	**0**	**0**	**0**	**0**	**0**	**0**	**0**	**0**	**0**	**0**	**0**	**0**	**0**	**0**	**0**

Id	RW	Field	Value Id	Value	Description
A	RW	TEP			Pointer to task register

22.2.53 FORK[3].TEP

Address offset: 0x91C

Channel 3 task end-point

Bit number	31	30	29	28	27	26	25	24	23	22	21	20	19	18	17	16	15	14	13	12	11	10	9	8	7	6	5	4	3	2	1	0
Id	A	A	A	A	A	A	A	A	A	A	A	A	A	A	A	A	A	A	A	A	A	A	A	A	A	A	A	A	A	A	A	A
Reset 0x00000000	**0**	**0**	**0**	**0**	**0**	**0**	**0**	**0**	**0**	**0**	**0**	**0**	**0**	**0**	**0**	**0**	**0**	**0**	**0**	**0**	**0**	**0**	**0**	**0**	**0**	**0**	**0**	**0**	**0**	**0**	**0**	**0**

Id	RW	Field	Value Id	Value	Description
A	RW	TEP			Pointer to task register

22.2.54 FORK[4].TEP

Address offset: 0x920

Channel 4 task end-point

Bit number	31	30	29	28	27	26	25	24	23	22	21	20	19	18	17	16	15	14	13	12	11	10	9	8	7	6	5	4	3	2	1	0
Id	A	A	A	A	A	A	A	A	A	A	A	A	A	A	A	A	A	A	A	A	A	A	A	A	A	A	A	A	A	A	A	A
Reset 0x00000000	**0**	**0**	**0**	**0**	**0**	**0**	**0**	**0**	**0**	**0**	**0**	**0**	**0**	**0**	**0**	**0**	**0**	**0**	**0**	**0**	**0**	**0**	**0**	**0**	**0**	**0**	**0**	**0**	**0**	**0**	**0**	**0**

Id	RW	Field	Value Id	Value	Description
A	RW	TEP			Pointer to task register

22.2.55 FORK[5].TEP

Address offset: 0x924

Channel 5 task end-point

Bit number	31	30	29	28	27	26	25	24	23	22	21	20	19	18	17	16	15	14	13	12	11	10	9	8	7	6	5	4	3	2	1	0
Id	A	A	A	A	A	A	A	A	A	A	A	A	A	A	A	A	A	A	A	A	A	A	A	A	A	A	A	A	A	A	A	A
Reset 0x00000000	**0**	**0**	**0**	**0**	**0**	**0**	**0**	**0**	**0**	**0**	**0**	**0**	**0**	**0**	**0**	**0**	**0**	**0**	**0**	**0**	**0**	**0**	**0**	**0**	**0**	**0**	**0**	**0**	**0**	**0**	**0**	**0**

Id	RW	Field	Value Id	Value	Description
A	RW	TEP			Pointer to task register

22.2.56 FORK[6].TEP

Address offset: 0x928

Channel 6 task end-point

Bit number	31	30	29	28	27	26	25	24	23	22	21	20	19	18	17	16	15	14	13	12	11	10	9	8	7	6	5	4	3	2	1	0
Id	A	A	A	A	A	A	A	A	A	A	A	A	A	A	A	A	A	A	A	A	A	A	A	A	A	A	A	A	A	A	A	A
Reset 0x00000000	**0**	**0**	**0**	**0**	**0**	**0**	**0**	**0**	**0**	**0**	**0**	**0**	**0**	**0**	**0**	**0**	**0**	**0**	**0**	**0**	**0**	**0**	**0**	**0**	**0**	**0**	**0**	**0**	**0**	**0**	**0**	**0**

Id	RW	Field	Value Id	Value	Description
A	RW	TEP			Pointer to task register

22.2.57 FORK[7].TEP

Address offset: 0x92C

Channel 7 task end-point

Bit number	31	30	29	28	27	26	25	24	23	22	21	20	19	18	17	16	15	14	13	12	11	10	9	8	7	6	5	4	3	2	1	0
Id	A	A	A	A	A	A	A	A	A	A	A	A	A	A	A	A	A	A	A	A	A	A	A	A	A	A	A	A	A	A	A	A
Reset 0x00000000	**0**	**0**	**0**	**0**	**0**	**0**	**0**	**0**	**0**	**0**	**0**	**0**	**0**	**0**	**0**	**0**	**0**	**0**	**0**	**0**	**0**	**0**	**0**	**0**	**0**	**0**	**0**	**0**	**0**	**0**	**0**	**0**

Id	RW	Field	Value Id	Value	Description
A	RW	TEP			Pointer to task register

22.2.58 FORK[8].TEP

Address offset: 0x930

Channel 8 task end-point

Bit number	31	30	29	28	27	26	25	24	23	22	21	20	19	18	17	16	15	14	13	12	11	10	9	8	7	6	5	4	3	2	1	0
Id	A	A	A	A	A	A	A	A	A	A	A	A	A	A	A	A	A	A	A	A	A	A	A	A	A	A	A	A	A	A	A	A
Reset 0x00000000	**0**	**0**	**0**	**0**	**0**	**0**	**0**	**0**	**0**	**0**	**0**	**0**	**0**	**0**	**0**	**0**	**0**	**0**	**0**	**0**	**0**	**0**	**0**	**0**	**0**	**0**	**0**	**0**	**0**	**0**	**0**	**0**

Id	RW	Field	Value Id	Value	Description
A	RW	TEP			Pointer to task register

22.2.59 FORK[9].TEP

Address offset: 0x934

Channel 9 task end-point

Bit number	31	30	29	28	27	26	25	24	23	22	21	20	19	18	17	16	15	14	13	12	11	10	9	8	7	6	5	4	3	2	1	0
Id	A	A	A	A	A	A	A	A	A	A	A	A	A	A	A	A	A	A	A	A	A	A	A	A	A	A	A	A	A	A	A	A
Reset 0x00000000	**0**	**0**	**0**	**0**	**0**	**0**	**0**	**0**	**0**	**0**	**0**	**0**	**0**	**0**	**0**	**0**	**0**	**0**	**0**	**0**	**0**	**0**	**0**	**0**	**0**	**0**	**0**	**0**	**0**	**0**	**0**	**0**

Id	RW	Field	Value Id	Value	Description
A	RW	TEP			Pointer to task register

22.2.60 FORK[10].TEP

Address offset: 0x938

Channel 10 task end-point

Bit number	31	30	29	28	27	26	25	24	23	22	21	20	19	18	17	16	15	14	13	12	11	10	9	8	7	6	5	4	3	2	1	0
Id	A	A	A	A	A	A	A	A	A	A	A	A	A	A	A	A	A	A	A	A	A	A	A	A	A	A	A	A	A	A	A	A
Reset 0x00000000	**0**	**0**	**0**	**0**	**0**	**0**	**0**	**0**	**0**	**0**	**0**	**0**	**0**	**0**	**0**	**0**	**0**	**0**	**0**	**0**	**0**	**0**	**0**	**0**	**0**	**0**	**0**	**0**	**0**	**0**	**0**	**0**

Id	RW	Field	Value Id	Value	Description
A	RW	TEP			Pointer to task register

22.2.61 FORK[11].TEP

Address offset: 0x93C

Channel 11 task end-point

Bit number	31	30	29	28	27	26	25	24	23	22	21	20	19	18	17	16	15	14	13	12	11	10	9	8	7	6	5	4	3	2	1	0
Id	A	A	A	A	A	A	A	A	A	A	A	A	A	A	A	A	A	A	A	A	A	A	A	A	A	A	A	A	A	A	A	A
Reset 0x00000000	**0**	**0**	**0**	**0**	**0**	**0**	**0**	**0**	**0**	**0**	**0**	**0**	**0**	**0**	**0**	**0**	**0**	**0**	**0**	**0**	**0**	**0**	**0**	**0**	**0**	**0**	**0**	**0**	**0**	**0**	**0**	**0**

Id	RW	Field	Value Id	Value	Description
A	RW	TEP			Pointer to task register

22.2.62 FORK[12].TEP

Address offset: 0x940

Channel 12 task end-point

Bit number	31	30	29	28	27	26	25	24	23	22	21	20	19	18	17	16	15	14	13	12	11	10	9	8	7	6	5	4	3	2	1	0
Id	A	A	A	A	A	A	A	A	A	A	A	A	A	A	A	A	A	A	A	A	A	A	A	A	A	A	A	A	A	A	A	A
Reset 0x00000000	**0**	**0**	**0**	**0**	**0**	**0**	**0**	**0**	**0**	**0**	**0**	**0**	**0**	**0**	**0**	**0**	**0**	**0**	**0**	**0**	**0**	**0**	**0**	**0**	**0**	**0**	**0**	**0**	**0**	**0**	**0**	**0**

Id	RW	Field	Value Id	Value	Description
A	RW	TEP			Pointer to task register

22.2.63 FORK[13].TEP

Address offset: 0x944

Channel 13 task end-point

Bit number	31	30	29	28	27	26	25	24	23	22	21	20	19	18	17	16	15	14	13	12	11	10	9	8	7	6	5	4	3	2	1	0
Id	A	A	A	A	A	A	A	A	A	A	A	A	A	A	A	A	A	A	A	A	A	A	A	A	A	A	A	A	A	A	A	A
Reset 0x00000000	**0**	**0**	**0**	**0**	**0**	**0**	**0**	**0**	**0**	**0**	**0**	**0**	**0**	**0**	**0**	**0**	**0**	**0**	**0**	**0**	**0**	**0**	**0**	**0**	**0**	**0**	**0**	**0**	**0**	**0**	**0**	**0**

Id	RW	Field	Value Id	Value	Description
A	RW	TEP			Pointer to task register

22.2.64 FORK[14].TEP

Address offset: 0x948

Channel 14 task end-point

Bit number	31	30	29	28	27	26	25	24	23	22	21	20	19	18	17	16	15	14	13	12	11	10	9	8	7	6	5	4	3	2	1	0
Id	A	A	A	A	A	A	A	A	A	A	A	A	A	A	A	A	A	A	A	A	A	A	A	A	A	A	A	A	A	A	A	A
Reset 0x00000000	**0**	**0**	**0**	**0**	**0**	**0**	**0**	**0**	**0**	**0**	**0**	**0**	**0**	**0**	**0**	**0**	**0**	**0**	**0**	**0**	**0**	**0**	**0**	**0**	**0**	**0**	**0**	**0**	**0**	**0**	**0**	**0**

Id	RW	Field	Value Id	Value	Description
A	RW	TEP			Pointer to task register

22.2.65 FORK[15].TEP

Address offset: 0x94C

Channel 15 task end-point

Bit number	31	30	29	28	27	26	25	24	23	22	21	20	19	18	17	16	15	14	13	12	11	10	9	8	7	6	5	4	3	2	1	0
Id	A	A	A	A	A	A	A	A	A	A	A	A	A	A	A	A	A	A	A	A	A	A	A	A	A	A	A	A	A	A	A	A
Reset 0x00000000	**0**	**0**	**0**	**0**	**0**	**0**	**0**	**0**	**0**	**0**	**0**	**0**	**0**	**0**	**0**	**0**	**0**	**0**	**0**	**0**	**0**	**0**	**0**	**0**	**0**	**0**	**0**	**0**	**0**	**0**	**0**	**0**

Id	RW	Field	Value Id	Value	Description
A	RW	TEP			Pointer to task register

22.2.66 FORK[16].TEP

Address offset: 0x950

Channel 16 task end-point

Bit number	31	30	29	28	27	26	25	24	23	22	21	20	19	18	17	16	15	14	13	12	11	10	9	8	7	6	5	4	3	2	1	0
Id	A	A	A	A	A	A	A	A	A	A	A	A	A	A	A	A	A	A	A	A	A	A	A	A	A	A	A	A	A	A	A	A
Reset 0x00000000	**0**	**0**	**0**	**0**	**0**	**0**	**0**	**0**	**0**	**0**	**0**	**0**	**0**	**0**	**0**	**0**	**0**	**0**	**0**	**0**	**0**	**0**	**0**	**0**	**0**	**0**	**0**	**0**	**0**	**0**	**0**	**0**

Id	RW	Field	Value Id	Value	Description
A	RW	TEP			Pointer to task register

22.2.67 FORK[17].TEP

Address offset: 0x954

Channel 17 task end-point

Bit number	31	30	29	28	27	26	25	24	23	22	21	20	19	18	17	16	15	14	13	12	11	10	9	8	7	6	5	4	3	2	1	0
Id	A	A	A	A	A	A	A	A	A	A	A	A	A	A	A	A	A	A	A	A	A	A	A	A	A	A	A	A	A	A	A	A
Reset 0x00000000	**0**	**0**	**0**	**0**	**0**	**0**	**0**	**0**	**0**	**0**	**0**	**0**	**0**	**0**	**0**	**0**	**0**	**0**	**0**	**0**	**0**	**0**	**0**	**0**	**0**	**0**	**0**	**0**	**0**	**0**	**0**	**0**

Id	RW	Field	Value Id	Value	Description
A	RW	TEP			Pointer to task register

22.2.68 FORK[18].TEP

Address offset: 0x958

Channel 18 task end-point

Bit number	31	30	29	28	27	26	25	24	23	22	21	20	19	18	17	16	15	14	13	12	11	10	9	8	7	6	5	4	3	2	1	0
Id	A	A	A	A	A	A	A	A	A	A	A	A	A	A	A	A	A	A	A	A	A	A	A	A	A	A	A	A	A	A	A	A
Reset 0x00000000	**0**	**0**	**0**	**0**	**0**	**0**	**0**	**0**	**0**	**0**	**0**	**0**	**0**	**0**	**0**	**0**	**0**	**0**	**0**	**0**	**0**	**0**	**0**	**0**	**0**	**0**	**0**	**0**	**0**	**0**	**0**	**0**

Id	RW	Field	Value Id	Value	Description
A	RW	TEP			Pointer to task register

22.2.69 FORK[19].TEP

Address offset: 0x95C

Channel 19 task end-point

Bit number	31	30	29	28	27	26	25	24	23	22	21	20	19	18	17	16	15	14	13	12	11	10	9	8	7	6	5	4	3	2	1	0
Id	A	A	A	A	A	A	A	A	A	A	A	A	A	A	A	A	A	A	A	A	A	A	A	A	A	A	A	A	A	A	A	A
Reset 0x00000000	**0**	**0**	**0**	**0**	**0**	**0**	**0**	**0**	**0**	**0**	**0**	**0**	**0**	**0**	**0**	**0**	**0**	**0**	**0**	**0**	**0**	**0**	**0**	**0**	**0**	**0**	**0**	**0**	**0**	**0**	**0**	**0**

Id	RW	Field	Value Id	Value	Description
A	RW	TEP			Pointer to task register

22.2.70 FORK[20].TEP

Address offset: 0x960

Channel 20 task end-point

Bit number	31	30	29	28	27	26	25	24	23	22	21	20	19	18	17	16	15	14	13	12	11	10	9	8	7	6	5	4	3	2	1	0
Id	A	A	A	A	A	A	A	A	A	A	A	A	A	A	A	A	A	A	A	A	A	A	A	A	A	A	A	A	A	A	A	A
Reset 0x00000000	**0**	**0**	**0**	**0**	**0**	**0**	**0**	**0**	**0**	**0**	**0**	**0**	**0**	**0**	**0**	**0**	**0**	**0**	**0**	**0**	**0**	**0**	**0**	**0**	**0**	**0**	**0**	**0**	**0**	**0**	**0**	**0**

Id	RW	Field	Value Id	Value	Description
A	RW	TEP			Pointer to task register

22.2.71 FORK[21].TEP

Address offset: 0x964

Channel 21 task end-point

Bit number	31	30	29	28	27	26	25	24	23	22	21	20	19	18	17	16	15	14	13	12	11	10	9	8	7	6	5	4	3	2	1	0
Id	A	A	A	A	A	A	A	A	A	A	A	A	A	A	A	A	A	A	A	A	A	A	A	A	A	A	A	A	A	A	A	A
Reset 0x00000000	**0**	**0**	**0**	**0**	**0**	**0**	**0**	**0**	**0**	**0**	**0**	**0**	**0**	**0**	**0**	**0**	**0**	**0**	**0**	**0**	**0**	**0**	**0**	**0**	**0**	**0**	**0**	**0**	**0**	**0**	**0**	**0**

Id	RW	Field	Value Id	Value	Description
A	RW	TEP			Pointer to task register

22.2.72 FORK[22].TEP

Address offset: 0x968

Channel 22 task end-point

Bit number	31	30	29	28	27	26	25	24	23	22	21	20	19	18	17	16	15	14	13	12	11	10	9	8	7	6	5	4	3	2	1	0
Id	A	A	A	A	A	A	A	A	A	A	A	A	A	A	A	A	A	A	A	A	A	A	A	A	A	A	A	A	A	A	A	A
Reset 0x00000000	**0**	**0**	**0**	**0**	**0**	**0**	**0**	**0**	**0**	**0**	**0**	**0**	**0**	**0**	**0**	**0**	**0**	**0**	**0**	**0**	**0**	**0**	**0**	**0**	**0**	**0**	**0**	**0**	**0**	**0**	**0**	**0**

Id	RW	Field	Value Id	Value	Description
A	RW	TEP			Pointer to task register

22.2.73 FORK[23].TEP

Address offset: 0x96C

Channel 23 task end-point

Bit number	31	30	29	28	27	26	25	24	23	22	21	20	19	18	17	16	15	14	13	12	11	10	9	8	7	6	5	4	3	2	1	0
Id	A	A	A	A	A	A	A	A	A	A	A	A	A	A	A	A	A	A	A	A	A	A	A	A	A	A	A	A	A	A	A	A
Reset 0x00000000	**0**	**0**	**0**	**0**	**0**	**0**	**0**	**0**	**0**	**0**	**0**	**0**	**0**	**0**	**0**	**0**	**0**	**0**	**0**	**0**	**0**	**0**	**0**	**0**	**0**	**0**	**0**	**0**	**0**	**0**	**0**	**0**

Id	RW	Field	Value Id	Value	Description
A	RW	TEP			Pointer to task register

22.2.74 FORK[24].TEP

Address offset: 0x970

Channel 24 task end-point

Bit number	31	30	29	28	27	26	25	24	23	22	21	20	19	18	17	16	15	14	13	12	11	10	9	8	7	6	5	4	3	2	1	0
Id	A	A	A	A	A	A	A	A	A	A	A	A	A	A	A	A	A	A	A	A	A	A	A	A	A	A	A	A	A	A	A	A
Reset 0x00000000	**0**	**0**	**0**	**0**	**0**	**0**	**0**	**0**	**0**	**0**	**0**	**0**	**0**	**0**	**0**	**0**	**0**	**0**	**0**	**0**	**0**	**0**	**0**	**0**	**0**	**0**	**0**	**0**	**0**	**0**	**0**	**0**

Id	RW	Field	Value Id	Value	Description
A	RW	TEP			Pointer to task register

22.2.75 FORK[25].TEP

Address offset: 0x974

Channel 25 task end-point

Bit number	31	30	29	28	27	26	25	24	23	22	21	20	19	18	17	16	15	14	13	12	11	10	9	8	7	6	5	4	3	2	1	0
Id	A	A	A	A	A	A	A	A	A	A	A	A	A	A	A	A	A	A	A	A	A	A	A	A	A	A	A	A	A	A	A	A
Reset 0x00000000	**0**	**0**	**0**	**0**	**0**	**0**	**0**	**0**	**0**	**0**	**0**	**0**	**0**	**0**	**0**	**0**	**0**	**0**	**0**	**0**	**0**	**0**	**0**	**0**	**0**	**0**	**0**	**0**	**0**	**0**	**0**	**0**

Id	RW	Field	Value Id	Value	Description
A	RW	TEP			Pointer to task register

22.2.76 FORK[26].TEP

Address offset: 0x978

Channel 26 task end-point

Bit number	31	30	29	28	27	26	25	24	23	22	21	20	19	18	17	16	15	14	13	12	11	10	9	8	7	6	5	4	3	2	1	0
Id	A	A	A	A	A	A	A	A	A	A	A	A	A	A	A	A	A	A	A	A	A	A	A	A	A	A	A	A	A	A	A	A
Reset 0x00000000	**0**	**0**	**0**	**0**	**0**	**0**	**0**	**0**	**0**	**0**	**0**	**0**	**0**	**0**	**0**	**0**	**0**	**0**	**0**	**0**	**0**	**0**	**0**	**0**	**0**	**0**	**0**	**0**	**0**	**0**	**0**	**0**

Id	RW	Field	Value Id	Value	Description
A	RW	TEP			Pointer to task register

22.2.77 FORK[27].TEP

Address offset: 0x97C

Channel 27 task end-point

Bit number	31	30	29	28	27	26	25	24	23	22	21	20	19	18	17	16	15	14	13	12	11	10	9	8	7	6	5	4	3	2	1	0
Id	A	A	A	A	A	A	A	A	A	A	A	A	A	A	A	A	A	A	A	A	A	A	A	A	A	A	A	A	A	A	A	A
Reset 0x00000000	**0**	**0**	**0**	**0**	**0**	**0**	**0**	**0**	**0**	**0**	**0**	**0**	**0**	**0**	**0**	**0**	**0**	**0**	**0**	**0**	**0**	**0**	**0**	**0**	**0**	**0**	**0**	**0**	**0**	**0**	**0**	**0**

Id	RW	Field	Value Id	Value	Description
A	RW	TEP			Pointer to task register

22.2.78 FORK[28].TEP

Address offset: 0x980

Channel 28 task end-point

Bit number	31	30	29	28	27	26	25	24	23	22	21	20	19	18	17	16	15	14	13	12	11	10	9	8	7	6	5	4	3	2	1	0
Id	A	A	A	A	A	A	A	A	A	A	A	A	A	A	A	A	A	A	A	A	A	A	A	A	A	A	A	A	A	A	A	A
Reset 0x00000000	**0**	**0**	**0**	**0**	**0**	**0**	**0**	**0**	**0**	**0**	**0**	**0**	**0**	**0**	**0**	**0**	**0**	**0**	**0**	**0**	**0**	**0**	**0**	**0**	**0**	**0**	**0**	**0**	**0**	**0**	**0**	**0**

Id	RW	Field	Value Id	Value	Description
A	RW	TEP			Pointer to task register

22.2.79 FORK[29].TEP

Address offset: 0x984

Channel 29 task end-point

Bit number	31	30	29	28	27	26	25	24	23	22	21	20	19	18	17	16	15	14	13	12	11	10	9	8	7	6	5	4	3	2	1	0
Id	A	A	A	A	A	A	A	A	A	A	A	A	A	A	A	A	A	A	A	A	A	A	A	A	A	A	A	A	A	A	A	A
Reset 0x00000000	**0**	**0**	**0**	**0**	**0**	**0**	**0**	**0**	**0**	**0**	**0**	**0**	**0**	**0**	**0**	**0**	**0**	**0**	**0**	**0**	**0**	**0**	**0**	**0**	**0**	**0**	**0**	**0**	**0**	**0**	**0**	**0**

Id	RW	Field	Value Id	Value	Description
A	RW	TEP			Pointer to task register

22.2.80 FORK[30].TEP

Address offset: 0x988

Channel 30 task end-point

Bit number	31	30	29	28	27	26	25	24	23	22	21	20	19	18	17	16	15	14	13	12	11	10	9	8	7	6	5	4	3	2	1	0
Id	A	A	A	A	A	A	A	A	A	A	A	A	A	A	A	A	A	A	A	A	A	A	A	A	A	A	A	A	A	A	A	A
Reset 0x00000000	**0**	**0**	**0**	**0**	**0**	**0**	**0**	**0**	**0**	**0**	**0**	**0**	**0**	**0**	**0**	**0**	**0**	**0**	**0**	**0**	**0**	**0**	**0**	**0**	**0**	**0**	**0**	**0**	**0**	**0**	**0**	**0**

Id	RW	Field	Value Id	Value	Description
A	RW	TEP			Pointer to task register

22.2.81 FORK[31].TEP

Address offset: 0x98C

Channel 31 task end-point

Bit number	31	30	29	28	27	26	25	24	23	22	21	20	19	18	17	16	15	14	13	12	11	10	9	8	7	6	5	4	3	2	1	0
Id	A	A	A	A	A	A	A	A	A	A	A	A	A	A	A	A	A	A	A	A	A	A	A	A	A	A	A	A	A	A	A	A
Reset 0x00000000	**0**	**0**	**0**	**0**	**0**	**0**	**0**	**0**	**0**	**0**	**0**	**0**	**0**	**0**	**0**	**0**	**0**	**0**	**0**	**0**	**0**	**0**	**0**	**0**	**0**	**0**	**0**	**0**	**0**	**0**	**0**	**0**

Id	RW	Field	Value Id	Value	Description
A	RW	TEP			Pointer to task register

23 RADIO — 2.4 GHz Radio

The RADIO contains a 2.4 GHz radio receiver and a 2.4 GHz radio transmitter that is compatible with Nordic's proprietary 1 Mbps and 2 Mbps radio modes in addition to 1 Mbps *Bluetooth*® low energy mode.

EasyDMA in combination with an automated packet assembler and packet disassembler, and an automated CRC generator and CRC checker, makes it very easy to configure and use the RADIO. See *Figure 28: RADIO block diagram* on page 201 for details.

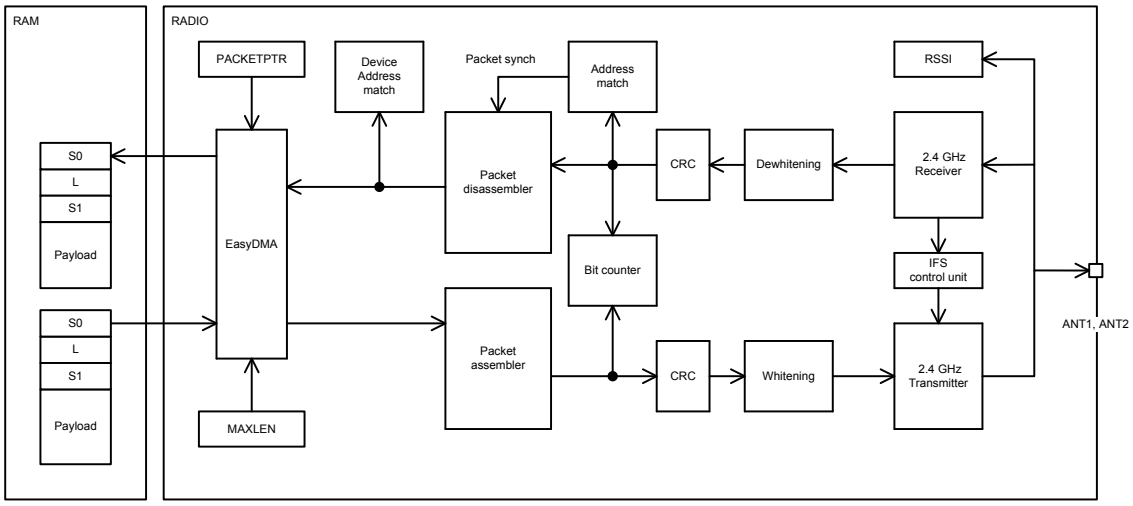

Figure 28: RADIO block diagram

The RADIO includes a Device Address Match unit and an interframe spacing control unit that can be utilized to simplify address white listing and interframe spacing respectively, in *Bluetooth* Smart and similar applications.

The RADIO also includes a Received Signal Strength Indicator (RSSI) and a bit counter. The bit counter generates events when a preconfigured number of bits have been sent or received by the RADIO.

23.1 EasyDMA

The RADIO use EasyDMA for reading and writing of data packets from and to the RAM without CPU involvement.

As illustrated in *Figure 1*, the RADIO's EasyDMA utilizes the same PACKETPTR for receiving and transmitting packets. The CPU should reconfigure this pointer every time before the RADIO is started via the START task.

The structure of a radio packet is described in detail in *Packet configuration* on page 202. The data that is stored in Data RAM and transported by EasyDMA consists of S0, LENGTH, S1, the payload itself, and a static add-on sent immediately after the payload.

The size of each of the above elements in the frame is configurable (see *Packet configuration* on page 202), and the space occupied in RAM depends on these settings. A size of zero is possible for any of the fields, it is up to the user to make sure that the resulting frame complies with the RF protocol chosen.

For the field sizes defined in bits, the occupation in RAM will always be rounded up to the next full byte size (for instance 3 bit length will allocate 1 byte in RAM, 9 bit length will allocate 2 bytes, etc.).

In addition, the S0INCL field in PCNF0 determines if S0 is present in RAM at all if its length is zero. If present, one byte is allocated in RAM.

The size of S0 is configured through the S0LEN field in PCNF0. The size of LENGTH is configured through the LFLEN field in PCNF0. The size of S1 is configured through the S1LEN field in PCNF0. The size of the payload is configured through the value in RAM corresponding to the LENGTH field. The size of the static add-on to the payload is configured through the STATLEN field in PCNF1.

The MAXLEN field in the PCNF1 register configures the maximum packet payload plus add-on size in number of bytes that can be transmitted or received by the RADIO. This feature can be used to ensure that the RADIO does not overwrite, or read beyond, the RAM assigned to the packet payload. This means that if the packet payload length defined by PCNF1.STATLEN and the LENGTH field in the packet specifies a packet larger than MAXLEN, the payload will be truncated at MAXLEN.

Note that MAXLEN includes the payload and the add-on, but excludes the size occupied by the S0, LENGTH and S1 fields. This has to be taken into account when allocating RAM.

If the payload plus add-on length is specified larger than MAXLEN, the RADIO will still transmit or receive in the same way as before except the payload is now truncated to MAXLEN. The packet's LENGTH field will not be altered when the payload is truncated. The RADIO will calculate CRC as if the packet length is equal to MAXLEN.

If the PACKETPTR is not pointing to the Data RAM region, an EasyDMA transfer may result in a HardFault or RAM corruption. See *Memory* on page 20 for more information about the different memory regions.

The DISABLED event indicates that the EasyDMA has finished accessing the RAM.

23.2 Packet configuration

A Radio packet contains the following fields: PREAMBLE, ADDRESS, S0, LENGTH, S1, PAYLOAD and CRC.

See *Figure 29: On-air packet layout* on page 202. Not shown in the figure is the static payload add-on (the length of which is defined in STATLEN, and which is 0 bytes long in a standard BLE packet), and would be sent between PAYLOAD and CRC. The Radio sends the different fields in the packet in the order they are illustrated below, from left to right. The preamble will be sent least significant bit first on-air.

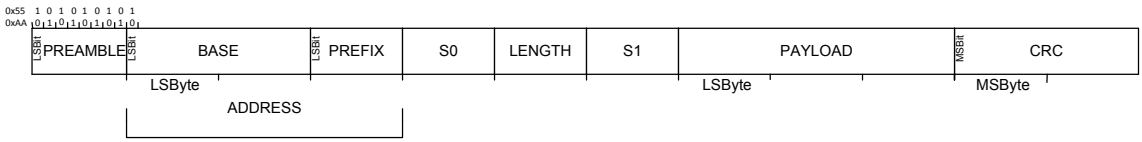

Figure 29: On-air packet layout

For all modes that can be specified in the MODE register, the PREAMBLE is one byte long. If the first bit of the ADDRESS is 0 the preamble will be set to 0xAA otherwise the PREAMBLE will be set to 0x55.

Radio packets are stored in memory inside instances of a radio packet data structure as illustrated in *Figure 30: In-RAM representation of radio packet, S0, LENGTH and S1 are optional* on page 202. The PREAMBLE, ADDRESS and CRC fields are omitted in this data structure.

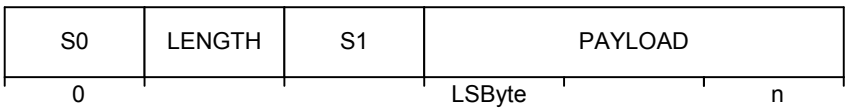

Figure 30: In-RAM representation of radio packet, S0, LENGTH and S1 are optional

The byte ordering on air is always Least Significant Byte First for the ADDRESS and PAYLOAD fields and Most Significant Byte First for the CRC field. The ADDRESS fields are always transmitted and received least significant bit first on-air. The CRC field is always transmitted and received Most Significant Bit first. The bit-

endian, i.e. which order the bits are sent and received in, of the S0, LENGTH, S1 and PAYLOAD fields can be configured via the ENDIAN in PCNF1.

The S0INCL field in PCNF0 determines if S0 is present in RAM at all if its length is zero. If present, one byte is allocated in RAM.

The sizes of the S0, LENGTH and S1 fields can be individually configured via S0LEN, LFLEN and S1LEN in PCNF0 respectively. If any of these fields are configured to be less than 8 bit long the, the least significant bits of the fields, as seen from the RAM representation, are used.

If S0, LENGTH or S1 are specified with zero length their fields will be omitted in memory, otherwise each field will be represented as a separate byte, regardless of the number of bits in their on-air counterpart.

23.3 Maximum packet length

Independent of the configuration of MAXLEN, the combined length of S0, LENGTH, S1 and PAYLOAD cannot exceed 258 bytes.

23.4 Address configuration

The on-air radio ADDRESS field is composed of two parts, the base address field and the address prefix field.

The size of the base address field is configurable via BALEN in PCNF1. The base address is truncated from LSByte if the BALEN is less than 4. See *Table 34: Definition of logical addresses* on page 203.

The on-air addresses are defined in the BASEn and PREFIXn registers, and it is only when writing these registers the user will have to relate to actual on-air addresses. For other radio address registers such as the TXADDRESS, RXADDRESSES and RXMATCH registers, logical radio addresses ranging from 0 to 7 are being used. The relationship between the on-air radio addresses and the logical addresses is described in *Table 34: Definition of logical addresses* on page 203.

Table 34: Definition of logical addresses

Logical address	Base address	Prefix byte
0	BASE0	PREFIX0.AP0
1	BASE1	PREFIX0.AP1
2	BASE1	PREFIX0.AP2
3	BASE1	PREFIX0.AP3
4	BASE1	PREFIX1.AP4
5	BASE1	PREFIX1.AP5
6	BASE1	PREFIX1.AP6
7	BASE1	PREFIX1.AP7

23.5 Data whitening

The RADIO is able to do packet whitening and de-whitening.

See WHITEEN in PCNF1 register for how to enable whitening. When enabled, whitening and de-whitening will be handled by the RADIO automatically as packets are sent and received.

The whitening word is generated using polynomial $g(D) = D^7 + D^4 + 1$, which then is XORed with the data packet that is to be whitened, or de-whitened. See the figure below.

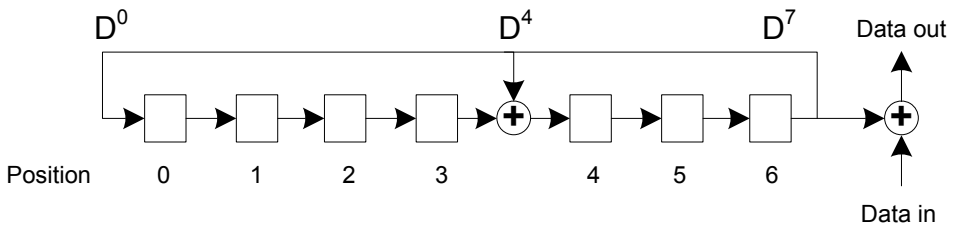

Figure 31: Data whitening and de-whitening

Whitening and de-whitening will be performed over the whole packet (except for the preamble and the address field).

The linear feedback shift register, illustrated in *Figure 31: Data whitening and de-whitening* on page 204 can be initialised via the DATAWHITEIV register.

23.6 CRC

The CRC generator in the RADIO calculates the CRC over the whole packet excluding the preamble. If desirable, the address field can be excluded from the CRC calculation as well

See CRCCNF register for more information.

The CRC polynomial is configurable as illustrated in *Figure 32: CRC generation of an n bit CRC* on page 204 where bit 0 in the CRCPOLY register corresponds to X^0 and bit 1 corresponds to X^1 etc. See CRCPOLY for more information.

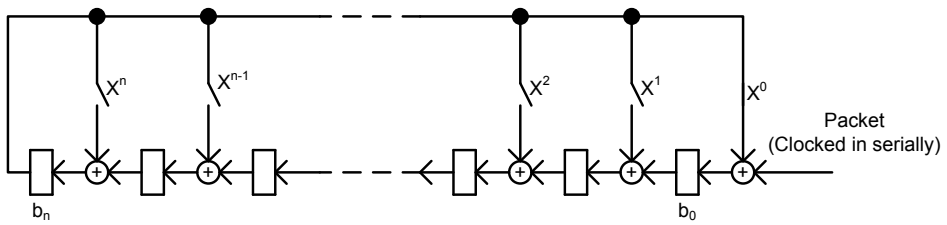

Figure 32: CRC generation of an n bit CRC

As illustrated in *Figure 32: CRC generation of an n bit CRC* on page 204, the CRC is calculated by feeding the packet serially through the CRC generator. Before the packet is clocked through the CRC generator, the CRC generator's latches b_0 through b_n will be initialized with a predefined value specified in the CRCINIT register. When the whole packet is clocked through the CRC generator, latches b_0 through b_n will hold the resulting CRC. This value will be used by the RADIO during both transmission and reception but it is not available to be read by the CPU at any time. A received CRC can however be read by the CPU via the RXCRC register independent of whether or not it has passed the CRC check.

The length (n) of the CRC is configurable, see CRCCNF for more information.

After the whole packet including the CRC has been received, the RADIO will generate a CRCOK event if no CRC errors were detected, or alternatively generate a CRCERROR event if CRC errors were detected.

The status of the CRC check can be read from the CRCSTATUS register after a packet has been received.

23.7 Radio states

The RADIO can enter a number of states.

The RADIO can enter the states described the table below. An overview state diagram for the RADIO is illustrated in *Figure 33: Radio states* on page 205. This figure shows how the tasks and events relate to the RADIO's operation. The RADIO does not prevent a task from being triggered from the wrong state. If a task is triggered from the wrong state, for example if the RXEN task is triggered from the RXDISABLE state, this may lead to incorrect behaviour. As illustrated in *Figure 33: Radio states* on page 205, the PAYLOAD event is always generated even if the payload is zero.

Table 35: RADIO state diagram

State	Description
DISABLED	No operations are going on inside the radio and the power consumption is at a minimum
RXRU	The radio is ramping up and preparing for reception
RXIDLE	The radio is ready for reception to start
RX	Reception has been started and the addresses enabled in the RXADDRESSES register are being monitored
TXRU	The radio is ramping up and preparing for transmission
TXIDLE	The radio is ready for transmission to start
TX	The radio is transmitting a packet
RXDISABLE	The radio is disabling the receiver
TXDISABLE	The radio is disabling the transmitter

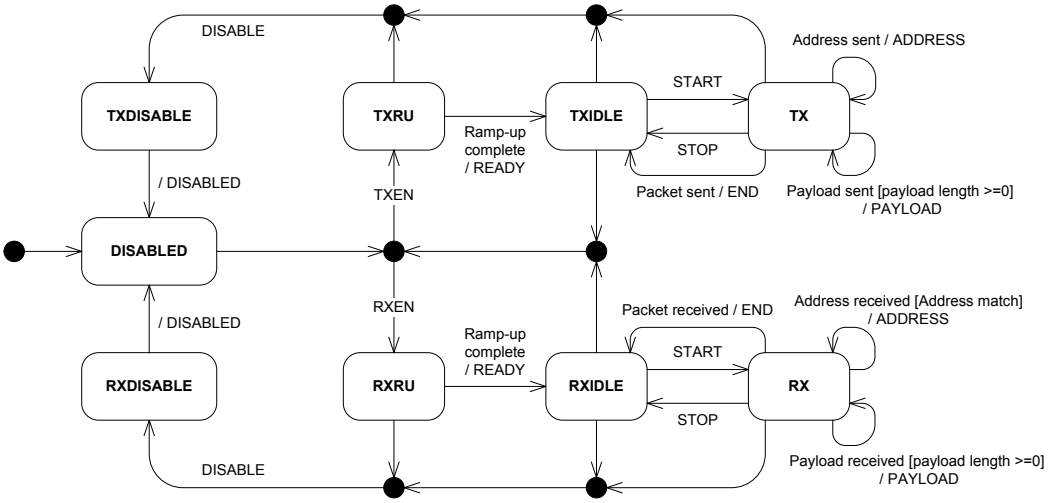

Figure 33: Radio states

23.8 Transmit sequence

Before the RADIO is able to transmit a packet, it must first ramp-up in TX mode.

See TXRU in *Figure 33: Radio states* on page 205 and *Figure 34: Transmit sequence* on page 206.
A TXRU ramp-up sequence is initiated when the TXEN task is triggered. After the radio has successfully ramped up it will generate the READY event indicating that a packet transmission can be initiate. A packet transmission is initiated by triggering the START task. As illustrated in *Figure 33: Radio states* on page 205 the START task can first be triggered after the RADIO has entered into the TXIDLE state.

Figure 34: Transmit sequence on page 206 illustrates a single packet transmission where the CPU manually triggers the different tasks needed to control the flow of the RADIO, i.e. no shortcuts are used. If shortcuts are not used, a certain amount of delay caused by CPU execution is expected between READY and START, and between END and DISABLE. As illustrated in *Figure 34: Transmit sequence* on page 206

the RADIO will by default transmit '1's between READY and START, and between END and DISABLED. What is transmitted can be programmed through the DTX field in the MODECNF0 register.

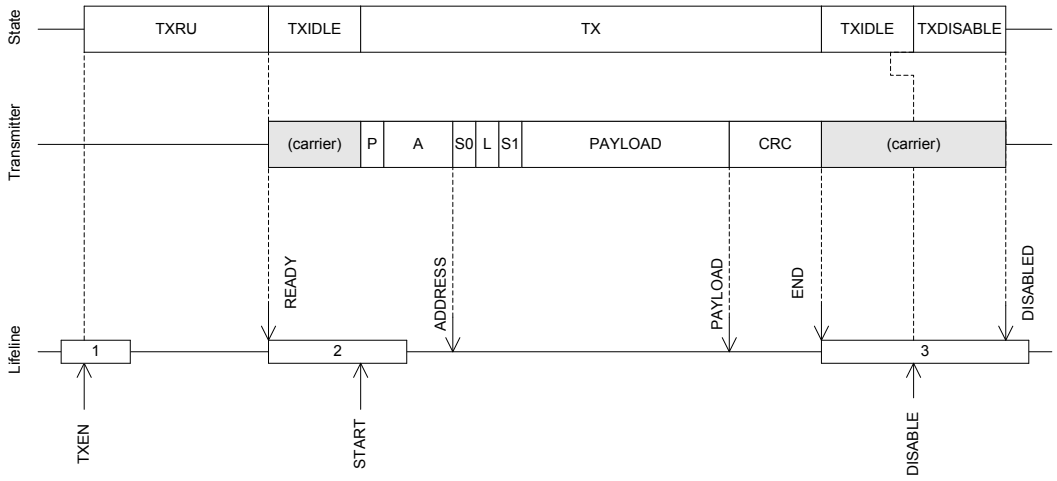

Figure 34: Transmit sequence

A slightly modified version of the transmit sequence from *Figure 34: Transmit sequence* on page 206 is illustrated in *Figure 35: Transmit sequence using shortcuts to avoid delays* on page 206 where the RADIO is configured to use shortcuts between READY and START, and between END and DISABLE, which means that no delay is introduced.

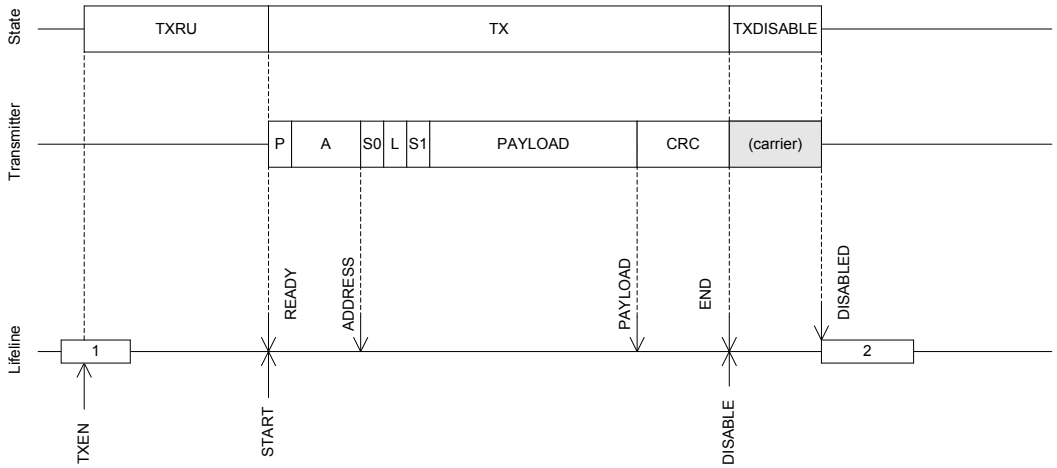

Figure 35: Transmit sequence using shortcuts to avoid delays

The RADIO is able to send multiple packets one after the other without having to disable and re-enable the RADIO between packets, this is illustrated in *Figure 36: Transmission of multiple packets* on page 207.

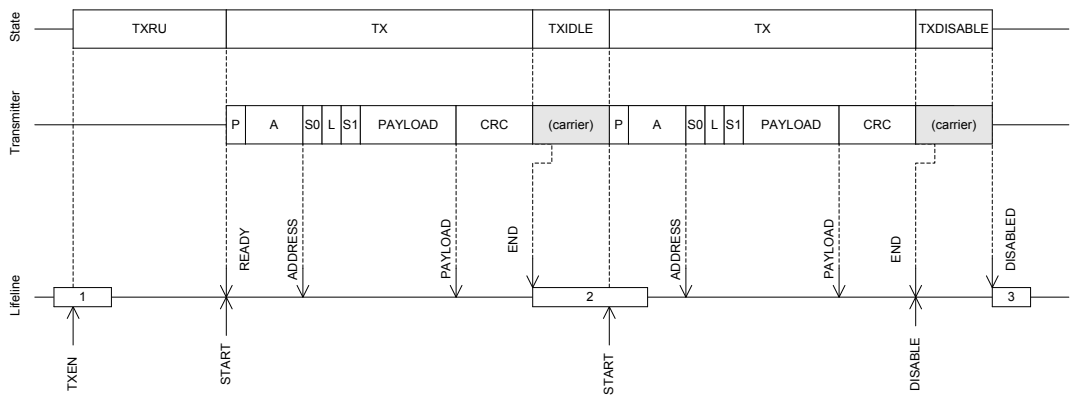

Figure 36: Transmission of multiple packets

23.9 Receive sequence

Before the RADIO is able to receive a packet, it must first ramp up in RX mode

See RXRU in *Figure 33: Radio states* on page 205 and *Figure 37: Receive sequence* on page 207.
An RXRU ramp-up sequence is initiated when the RXEN task is triggered. After the radio has successfully ramped up it will generate the READY event indicating that a packet reception can be initiated. A packet reception is initiated by triggering the START task. As illustrated in *Figure 33: Radio states* on page 205 the START task can, first be triggered after the RADIO has entered into the RXIDLE state.

Figure 37: Receive sequence on page 207 illustrates a single packet reception where the CPU manually triggers the different tasks needed to control the flow of the RADIO, i.e. no shortcuts are used. If shortcuts are not used, a certain amount of delay, caused by CPU execution, is expected between READY and START, and between END and DISABLE. As illustrated *Figure 37: Receive sequence* on page 207 the RADIO will be listening and possibly receiving undefined data, illustrated with an 'X', from START and until a packet with valid preamble (P) is received.

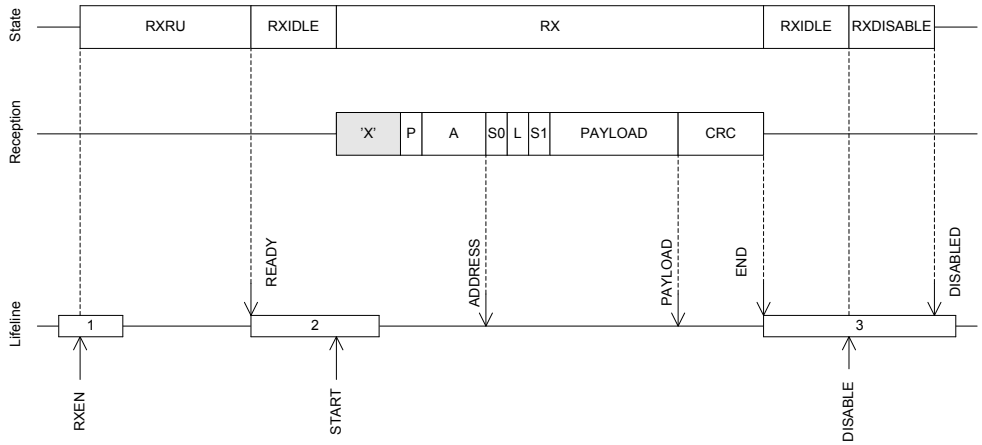

Figure 37: Receive sequence

A slightly modified version of the receive sequence from *Figure 37: Receive sequence* on page 207 is illustrated in *Figure 38: Receive sequence using shortcuts to avoid delays* on page 208 where the the RADIO is configured to use shortcuts between READY and START, and between END and DISABLE, which means that no delay is introduced.

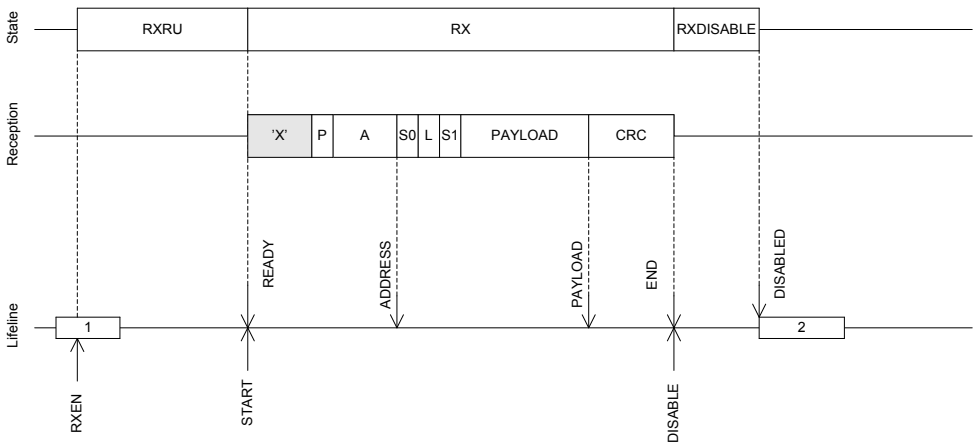

Figure 38: Receive sequence using shortcuts to avoid delays

The RADIO is able to receive multiple packets one after the other without having to disable and re-enable the RADIO between packets, this is illustrated *Figure 39: Reception of multiple packets* on page 208.

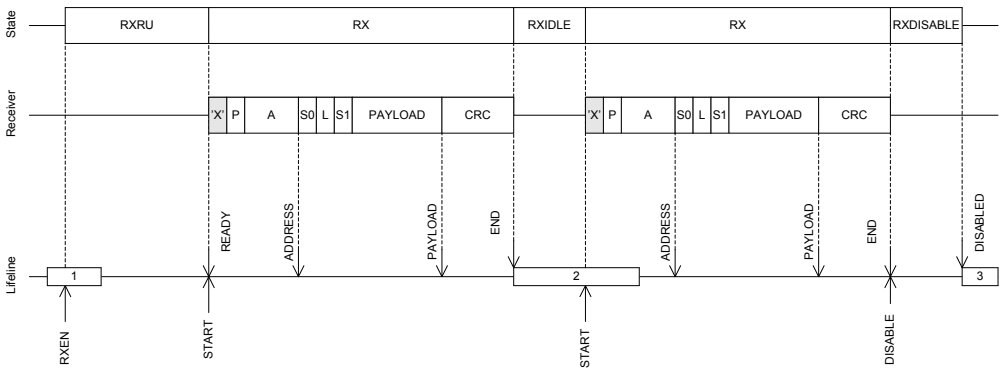

Figure 39: Reception of multiple packets

23.10 Received Signal Strength Indicator (RSSI)

The radio implements a mechanism for measuring the power in the received radio signal. This feature is called Received Signal Strength Indicator (RSSI).

Sampling of the received signal strength is started by using the RSSISTART task. The sample can be read from the RSSISAMPLE register.

The sample period of the RSSI is defined by $RSSI_{PERIOD}$, see the device product specification for details. The RSSI sample will hold the average received signal strength during this sample period.

For the RSSI sample to be valid the radio has to be enabled in receive mode (RXEN task) and the reception has to be started (READY event followed by START task).

23.11 Interframe spacing

Interframe spacing is the time interval between two consecutive packets.

It is defined as the time, in micro seconds, from the end of the last bit of the previous packet received and to the start of the first bit of the subsequent packet that is transmitted. The RADIO is able to enforce this

interval as specified in the TIFS register as long as TIFS is not specified to be shorter than the RADIO's turn-around time, i.e. the time needed to switch off the receiver, and switch back on the transmitter.

TIFS is only enforced if END_DISABLE and DISABLED_TXEN shortcuts are enabled. TIFS is only qualified for use in BLE_1MBIT mode, and default ramp-up mode.

23.12 Device address match

The device address match feature is tailored for address white listing in a Bluetooth Smart and similar implementations.

This feature enables on-the-fly device address matching while receiving a packet on air. This feature only works in receive mode and as long as RADIO is configured for little endian, see PCNF1.ENDIAN.

The Device Address match unit assumes that the 48 first bits of the payload is the device address and that bit number 6 in S0 is the TxAdd bit. See the Bluetooth Core Specification for more information about device addresses, TxAdd and whitelisting.

The RADIO is able to listen for eight different device addresses at the same time. These addresses are specified in a DAB/DAP register pair, one pair per address, in addition to a TxAdd bit configured in the DACNF register. The DAB register specifies the 32 least significant bits of the device address, while the DAP register specifies the 16 most significant bits of the device address.

Each of the device addresses can be individually included or excluded from the matching mechanism. This is configured in the DACNF register.

23.13 Bit counter

The RADIO implements a simple counter that can be configured to generate an event after a specific number of bits have been transmitted or received.

By using shortcuts, this counter can be started from different events generated by the RADIO and hence count relative to these.

The bit counter is started by triggering the BCSTART task, and stopped by triggering the BCSTOP task. A BCMATCH event will be generated when the bit counter has counted the number of bits specified in the BCC register. The bit counter will continue to count bits until the DISABLED event is generated or until the BCSTOP task is triggered. The CPU can therefore, after a BCMATCH event, reconfigure the BCC value for new BCMATCH events within the same packet.

The bit counter can only be started after the RADIO has received the ADDRESS event.

The bit counter will stop and reset on BCSTOP, STOP, END and DISABLE tasks.

The figure below illustrates how the bit counter can be used to generate a BCMATCH event in the beginning of the packet payload, and again generate a second BCMATCH event after sending 2 bytes (16 bits) of the payload.

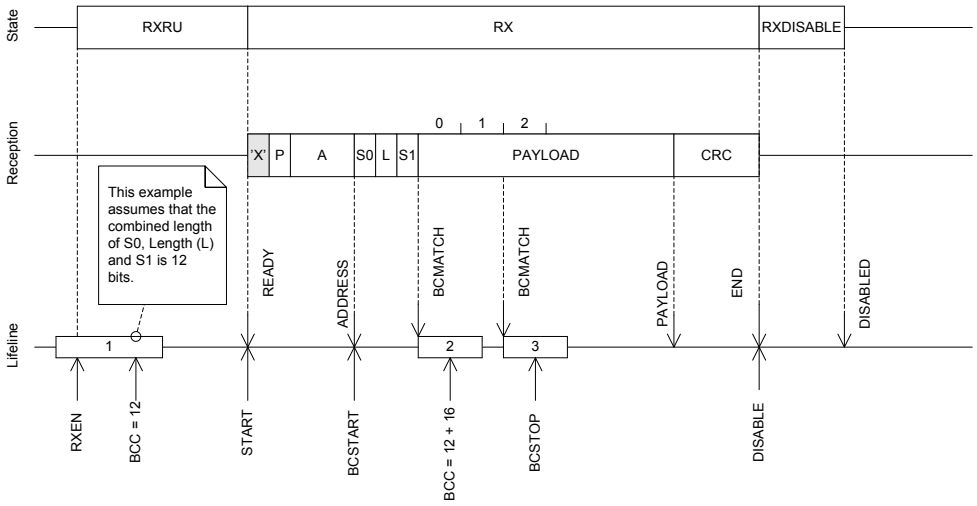

Figure 40: Bit counter example

23.14 Registers

Table 36: Instances

Base address	Peripheral	Instance	Description	Configuration
0x40001000	RADIO	RADIO	2.4 GHz radio	

Table 37: Register Overview

Register	Offset	Description
TASKS_TXEN	0x000	Enable RADIO in TX mode
TASKS_RXEN	0x004	Enable RADIO in RX mode
TASKS_START	0x008	Start RADIO
TASKS_STOP	0x00C	Stop RADIO
TASKS_DISABLE	0x010	Disable RADIO
TASKS_RSSISTART	0x014	Start the RSSI and take one single sample of the receive signal strength.
TASKS_RSSISTOP	0x018	Stop the RSSI measurement
TASKS_BCSTART	0x01C	Start the bit counter
TASKS_BCSTOP	0x020	Stop the bit counter
EVENTS_READY	0x100	RADIO has ramped up and is ready to be started
EVENTS_ADDRESS	0x104	Address sent or received
EVENTS_PAYLOAD	0x108	Packet payload sent or received
EVENTS_END	0x10C	Packet sent or received
EVENTS_DISABLED	0x110	RADIO has been disabled
EVENTS_DEVMATCH	0x114	A device address match occurred on the last received packet
EVENTS_DEVMISS	0x118	No device address match occurred on the last received packet
EVENTS_RSSIEND	0x11C	Sampling of receive signal strength complete.
EVENTS_BCMATCH	0x128	Bit counter reached bit count value.
EVENTS_CRCOK	0x130	Packet received with CRC ok
EVENTS_CRCERROR	0x134	Packet received with CRC error
SHORTS	0x200	Shortcut register
INTENSET	0x304	Enable interrupt
INTENCLR	0x308	Disable interrupt
CRCSTATUS	0x400	CRC status
RXMATCH	0x408	Received address
RXCRC	0x40C	CRC field of previously received packet

Register	Offset	Description
DAI	0x410	Device address match index
PACKETPTR	0x504	Packet pointer
FREQUENCY	0x508	Frequency
TXPOWER	0x50C	Output power
MODE	0x510	Data rate and modulation
PCNF0	0x514	Packet configuration register 0
PCNF1	0x518	Packet configuration register 1
BASE0	0x51C	Base address 0
BASE1	0x520	Base address 1
PREFIX0	0x524	Prefixes bytes for logical addresses 0-3
PREFIX1	0x528	Prefixes bytes for logical addresses 4-7
TXADDRESS	0x52C	Transmit address select
RXADDRESSES	0x530	Receive address select
CRCCNF	0x534	CRC configuration
CRCPOLY	0x538	CRC polynomial
CRCINIT	0x53C	CRC initial value
	0x540	Reserved
TIFS	0x544	Inter Frame Spacing in us
RSSISAMPLE	0x548	RSSI sample
STATE	0x550	Current radio state
DATAWHITEIV	0x554	Data whitening initial value
BCC	0x560	Bit counter compare
DAB[0]	0x600	Device address base segment 0
DAB[1]	0x604	Device address base segment 1
DAB[2]	0x608	Device address base segment 2
DAB[3]	0x60C	Device address base segment 3
DAB[4]	0x610	Device address base segment 4
DAB[5]	0x614	Device address base segment 5
DAB[6]	0x618	Device address base segment 6
DAB[7]	0x61C	Device address base segment 7
DAP[0]	0x620	Device address prefix 0
DAP[1]	0x624	Device address prefix 1
DAP[2]	0x628	Device address prefix 2
DAP[3]	0x62C	Device address prefix 3
DAP[4]	0x630	Device address prefix 4
DAP[5]	0x634	Device address prefix 5
DAP[6]	0x638	Device address prefix 6
DAP[7]	0x63C	Device address prefix 7
DACNF	0x640	Device address match configuration
MODECNF0	0x650	Radio mode configuration register 0
POWER	0xFFC	Peripheral power control

23.14.1 SHORTS

Address offset: 0x200

Shortcut register

Bit number	31	30	29	28	27	26	25	24	23	22	21	20	19	18	17	16	15	14	13	12	11	10	9	8	7	6	5	4	3	2	1	0
Id																								H		G	F	E	D	C	B	A
Reset 0x00000000	**0**	**0**	**0**	**0**	**0**	**0**	**0**	**0**	**0**	**0**	**0**	**0**	**0**	**0**	**0**	**0**	**0**	**0**	**0**	**0**	**0**	**0**	**0**	**0**	**0**	**0**	**0**	**0**	**0**	**0**	**0**	**0**

Id	RW	Field	Value Id	Value	Description
A	RW	READY_START			Shortcut between READY event and START task See *EVENTS_READY* and *TASKS_START*
			Disabled	0	Disable shortcut
			Enabled	1	Enable shortcut
B	RW	END_DISABLE			Shortcut between END event and DISABLE task See *EVENTS_END* and *TASKS_DISABLE*

Bit number				31	30	29	28	27	26	25	24	23	22	21	20	19	18	17	16	15	14	13	12	11	10	9	8	7	6	5	4	3	2	1	0
Id																											H		G	F	E	D	C	B	A
Reset 0x00000000				**0**	**0**	**0**	**0**	**0**	**0**	**0**	**0**	**0**	**0**	**0**	**0**	**0**	**0**	**0**	**0**	**0**	**0**	**0**	**0**	**0**	**0**	**0**	**0**	**0**	**0**	**0**	**0**	**0**	**0**	**0**	**0**
Id	**RW**	**Field**	**Value Id**	**Value**																															
			Disabled	0																															
			Enabled	1																															
C	RW	DISABLED_TXEN																																	
			Disabled	0																															
			Enabled	1																															
D	RW	DISABLED_RXEN																																	
			Disabled	0																															
			Enabled	1																															
E	RW	ADDRESS_RSSISTART																																	
			Disabled	0																															
			Enabled	1																															
F	RW	END_START																																	
			Disabled	0																															
			Enabled	1																															
G	RW	ADDRESS_BCSTART																																	
			Disabled	0																															
			Enabled	1																															
H	RW	DISABLED_RSSISTOP																																	
			Disabled	0																															
			Enabled	1																															

23.14.2 INTENSET

Address offset: 0x304

Enable interrupt

Bit number				31	30	29	28	27	26	25	24	23	22	21	20	19	18	17	16	15	14	13	12	11	10	9	8	7	6	5	4	3	2	1	0
Id																						L	K		I			H	G	F	E	D	C	B	A
Reset 0x00000000				**0**	**0**	**0**	**0**	**0**	**0**	**0**	**0**	**0**	**0**	**0**	**0**	**0**	**0**	**0**	**0**	**0**	**0**	**0**	**0**	**0**	**0**	**0**	**0**	**0**	**0**	**0**	**0**	**0**	**0**	**0**	**0**
Id	**RW**	**Field**	**Value Id**	**Value**																															
A	RW	READY																																	
			Set	1																															
			Disabled	0																															
			Enabled	1																															
B	RW	ADDRESS																																	
			Set	1																															
			Disabled	0																															
			Enabled	1																															
C	RW	PAYLOAD																																	
			Set	1																															
			Disabled	0																															
			Enabled	1																															
D	RW	END																																	

Bit number				31	30	29	28	27	26	25	24	23	22	21	20	19	18	17	16	15	14	13	12	11	10	9	8	7	6	5	4	3	2	1	0
Id																						L	K		I			H	G	F	E	D	C	B	A
Reset 0x00000000				**0**	**0**	**0**	**0**	**0**	**0**	**0**	**0**	**0**	**0**	**0**	**0**	**0**	**0**	**0**	**0**	**0**	**0**	**0**	**0**	**0**	**0**	**0**	**0**	**0**	**0**	**0**	**0**	**0**	**0**	**0**	**0**
Id	**RW**	**Field**	**Value Id**	**Value**								**Description**																							
												See *EVENTS_END*																							
			Set	1								Enable																							
			Disabled	0								Read: Disabled																							
			Enabled	1								Read: Enabled																							
E	RW	DISABLED										Write '1' to Enable interrupt for DISABLED event See *EVENTS_DISABLED*																							
			Set	1								Enable																							
			Disabled	0								Read: Disabled																							
			Enabled	1								Read: Enabled																							
F	RW	DEVMATCH										Write '1' to Enable interrupt for DEVMATCH event See *EVENTS_DEVMATCH*																							
			Set	1								Enable																							
			Disabled	0								Read: Disabled																							
			Enabled	1								Read: Enabled																							
G	RW	DEVMISS										Write '1' to Enable interrupt for DEVMISS event See *EVENTS_DEVMISS*																							
			Set	1								Enable																							
			Disabled	0								Read: Disabled																							
			Enabled	1								Read: Enabled																							
H	RW	RSSIEND										Write '1' to Enable interrupt for RSSIEND event See *EVENTS_RSSIEND*																							
			Set	1								Enable																							
			Disabled	0								Read: Disabled																							
			Enabled	1								Read: Enabled																							
I	RW	BCMATCH										Write '1' to Enable interrupt for BCMATCH event See *EVENTS_BCMATCH*																							
			Set	1								Enable																							
			Disabled	0								Read: Disabled																							
			Enabled	1								Read: Enabled																							
K	RW	CRCOK										Write '1' to Enable interrupt for CRCOK event See *EVENTS_CRCOK*																							
			Set	1								Enable																							
			Disabled	0								Read: Disabled																							
			Enabled	1								Read: Enabled																							
L	RW	CRCERROR										Write '1' to Enable interrupt for CRCERROR event See *EVENTS_CRCERROR*																							
			Set	1								Enable																							
			Disabled	0								Read: Disabled																							
			Enabled	1								Read: Enabled																							

23.14.3 INTENCLR

Address offset: 0x308

Disable interrupt

Bit number				31	30	29	28	27	26	25	24	23	22	21	20	19	18	17	16	15	14	13	12	11	10	9	8	7	6	5	4	3	2	1	0
Id																						L	K		I			H	G	F	E	D	C	B	A
Reset 0x00000000				**0**	**0**	**0**	**0**	**0**	**0**	**0**	**0**	**0**	**0**	**0**	**0**	**0**	**0**	**0**	**0**	**0**	**0**	**0**	**0**	**0**	**0**	**0**	**0**	**0**	**0**	**0**	**0**	**0**	**0**	**0**	**0**
Id	**RW**	**Field**	**Value Id**	**Value**								**Description**																							
A	RW	READY										Write '1' to Disable interrupt for READY event See *EVENTS_READY*																							
			Clear	1								Disable																							

Bit number				31	30	29	28	27	26	25	24	23	22	21	20	19	18	17	16	15	14	13	12	11	10	9	8	7	6	5	4	3	2	1	0
Id																						L	K		I			H	G	F	E	D	C	B	A
Reset 0x00000000				**0**	**0**	**0**	**0**	**0**	**0**	**0**	**0**	**0**	**0**	**0**	**0**	**0**	**0**	**0**	**0**	**0**	**0**	**0**	**0**	**0**	**0**	**0**	**0**	**0**	**0**	**0**	**0**	**0**	**0**	**0**	**0**
Id	**RW**	**Field**	**Value Id**	**Value**								**Description**																							
			Disabled	0								Read: Disabled																							
			Enabled	1								Read: Enabled																							
B	RW	ADDRESS										Write '1' to Disable interrupt for ADDRESS event See *EVENTS_ADDRESS*																							
			Clear	1								Disable																							
			Disabled	0								Read: Disabled																							
			Enabled	1								Read: Enabled																							
C	RW	PAYLOAD										Write '1' to Disable interrupt for PAYLOAD event See *EVENTS_PAYLOAD*																							
			Clear	1								Disable																							
			Disabled	0								Read: Disabled																							
			Enabled	1								Read: Enabled																							
D	RW	END										Write '1' to Disable interrupt for END event See *EVENTS_END*																							
			Clear	1								Disable																							
			Disabled	0								Read: Disabled																							
			Enabled	1								Read: Enabled																							
E	RW	DISABLED										Write '1' to Disable interrupt for DISABLED event See *EVENTS_DISABLED*																							
			Clear	1								Disable																							
			Disabled	0								Read: Disabled																							
			Enabled	1								Read: Enabled																							
F	RW	DEVMATCH										Write '1' to Disable interrupt for DEVMATCH event See *EVENTS_DEVMATCH*																							
			Clear	1								Disable																							
			Disabled	0								Read: Disabled																							
			Enabled	1								Read: Enabled																							
G	RW	DEVMISS										Write '1' to Disable interrupt for DEVMISS event See *EVENTS_DEVMISS*																							
			Clear	1								Disable																							
			Disabled	0								Read: Disabled																							
			Enabled	1								Read: Enabled																							
H	RW	RSSIEND										Write '1' to Disable interrupt for RSSIEND event See *EVENTS_RSSIEND*																							
			Clear	1								Disable																							
			Disabled	0								Read: Disabled																							
			Enabled	1								Read: Enabled																							
I	RW	BCMATCH										Write '1' to Disable interrupt for BCMATCH event See *EVENTS_BCMATCH*																							
			Clear	1								Disable																							
			Disabled	0								Read: Disabled																							
			Enabled	1								Read: Enabled																							
K	RW	CRCOK										Write '1' to Disable interrupt for CRCOK event See *EVENTS_CRCOK*																							
			Clear	1								Disable																							
			Disabled	0								Read: Disabled																							
			Enabled	1								Read: Enabled																							
L	RW	CRCERROR										Write '1' to Disable interrupt for CRCERROR event See *EVENTS_CRCERROR*																							
			Clear	1								Disable																							
			Disabled	0								Read: Disabled																							

Bit number				31	30	29	28	27	26	25	24	23	22	21	20	19	18	17	16	15	14	13	12	11	10	9	8	7	6	5	4	3	2	1	0
Id																						L	K		I			H	G	F	E	D	C	B	A
Reset 0x00000000				**0**	**0**	**0**	**0**	**0**	**0**	**0**	**0**	**0**	**0**	**0**	**0**	**0**	**0**	**0**	**0**	**0**	**0**	**0**	**0**	**0**	**0**	**0**	**0**	**0**	**0**	**0**	**0**	**0**	**0**	**0**	**0**
Id	**RW**	**Field**	**Value Id**	**Value**								**Description**																							
			Enabled	1								Read: Enabled																							

23.14.4 CRCSTATUS

Address offset: 0x400

CRC status

Bit number				31	30	29	28	27	26	25	24	23	22	21	20	19	18	17	16	15	14	13	12	11	10	9	8	7	6	5	4	3	2	1	0
Id																																			A
Reset 0x00000000				**0**	**0**	**0**	**0**	**0**	**0**	**0**	**0**	**0**	**0**	**0**	**0**	**0**	**0**	**0**	**0**	**0**	**0**	**0**	**0**	**0**	**0**	**0**	**0**	**0**	**0**	**0**	**0**	**0**	**0**	**0**	**0**
Id	**RW**	**Field**	**Value Id**	**Value**								**Description**																							
A	R	CRCSTATUS										CRC status of packet received																							
			CRCError	0								Packet received with CRC error																							
			CRCOk	1								Packet received with CRC ok																							

23.14.5 RXMATCH

Address offset: 0x408

Received address

Bit number				31	30	29	28	27	26	25	24	23	22	21	20	19	18	17	16	15	14	13	12	11	10	9	8	7	6	5	4	3	2	1	0
Id																																	A	A	A
Reset 0x00000000				**0**	**0**	**0**	**0**	**0**	**0**	**0**	**0**	**0**	**0**	**0**	**0**	**0**	**0**	**0**	**0**	**0**	**0**	**0**	**0**	**0**	**0**	**0**	**0**	**0**	**0**	**0**	**0**	**0**	**0**	**0**	**0**
Id	**RW**	**Field**	**Value Id**	**Value**								**Description**																							
A	R	RXMATCH										Received address																							
												Logical address of which previous packet was received																							

23.14.6 RXCRC

Address offset: 0x40C

CRC field of previously received packet

Bit number				31	30	29	28	27	26	25	24	23	22	21	20	19	18	17	16	15	14	13	12	11	10	9	8	7	6	5	4	3	2	1	0
Id												A	A	A	A	A	A	A	A	A	A	A	A	A	A	A	A	A	A	A	A	A	A	A	A
Reset 0x00000000				**0**	**0**	**0**	**0**	**0**	**0**	**0**	**0**	**0**	**0**	**0**	**0**	**0**	**0**	**0**	**0**	**0**	**0**	**0**	**0**	**0**	**0**	**0**	**0**	**0**	**0**	**0**	**0**	**0**	**0**	**0**	**0**
Id	**RW**	**Field**	**Value Id**	**Value**								**Description**																							
A	R	RXCRC										CRC field of previously received packet																							
												CRC field of previously received packet																							

23.14.7 DAI

Address offset: 0x410

Device address match index

Bit number				31	30	29	28	27	26	25	24	23	22	21	20	19	18	17	16	15	14	13	12	11	10	9	8	7	6	5	4	3	2	1	0
Id																																	A	A	A
Reset 0x00000000				**0**	**0**	**0**	**0**	**0**	**0**	**0**	**0**	**0**	**0**	**0**	**0**	**0**	**0**	**0**	**0**	**0**	**0**	**0**	**0**	**0**	**0**	**0**	**0**	**0**	**0**	**0**	**0**	**0**	**0**	**0**	**0**
Id	**RW**	**Field**	**Value Id**	**Value**								**Description**																							
A	R	DAI										Device address match index																							
												Index (n) of device address, see DAB[n] and DAP[n], that got an address match.																							

23.14.8 PACKETPTR

Address offset: 0x504

Packet pointer

Bit number	31	30	29	28	27	26	25	24	23	22	21	20	19	18	17	16	15	14	13	12	11	10	9	8	7	6	5	4	3	2	1	0
Id	A	A	A	A	A	A	A	A	A	A	A	A	A	A	A	A	A	A	A	A	A	A	A	A	A	A	A	A	A	A	A	A
Reset 0x00000000	**0**	**0**	**0**	**0**	**0**	**0**	**0**	**0**	**0**	**0**	**0**	**0**	**0**	**0**	**0**	**0**	**0**	**0**	**0**	**0**	**0**	**0**	**0**	**0**	**0**	**0**	**0**	**0**	**0**	**0**	**0**	**0**

Id	RW	Field	Value Id	Value	Description	
A	RW	PACKETPTR			Packet pointer Packet address to be used for the next transmission or reception. When transmitting, the packet pointed to by this address will be transmitted and when receiving, the received packet will be written to this address. This address is a byte aligned ram address.	

23.14.9 FREQUENCY

Address offset: 0x508

Frequency

Bit number	31	30	29	28	27	26	25	24	23	22	21	20	19	18	17	16	15	14	13	12	11	10	9	8	7	6	5	4	3	2	1	0
Id																								B		A	A	A	A	A	A	A
Reset 0x00000002	**0**	**0**	**0**	**0**	**0**	**0**	**0**	**0**	**0**	**0**	**0**	**0**	**0**	**0**	**0**	**0**	**0**	**0**	**0**	**0**	**0**	**0**	**0**	**0**	**0**	**0**	**0**	**0**	**0**	**0**	**1**	**0**

Id	RW	Field	Value Id	Value	Description	
A	RW	FREQUENCY		[0..100]	Radio channel frequency Frequency = 2400 + FREQUENCY (MHz).	
B	RW	MAP			Channel map selection.	
			Default	0	Channel map between 2400 MHZ .. 2500 MHz Frequency = 2400 + FREQUENCY (MHz)	
			Low	1	Channel map between 2360 MHZ .. 2460 MHz Frequency = 2360 + FREQUENCY (MHz)	

23.14.10 TXPOWER

Address offset: 0x50C

Output power

Bit number	31	30	29	28	27	26	25	24	23	22	21	20	19	18	17	16	15	14	13	12	11	10	9	8	7	6	5	4	3	2	1	0
Id																									A	A	A	A	A	A	A	A
Reset 0x00000000	**0**	**0**	**0**	**0**	**0**	**0**	**0**	**0**	**0**	**0**	**0**	**0**	**0**	**0**	**0**	**0**	**0**	**0**	**0**	**0**	**0**	**0**	**0**	**0**	**0**	**0**	**0**	**0**	**0**	**0**	**0**	**0**

Id	RW	Field	Value Id	Value	Description	
A	RW	TXPOWER			RADIO output power. Output power in number of dBm, i.e. if the value -20 is specified the output power will be set to -20dBm.	
			Pos4dBm	0x04	+4 dBm	
			Pos3dBm	0x03	+3 dBm	
			0dBm	0x00	0 dBm	
			Neg4dBm	0xFC	-4 dBm	
			Neg8dBm	0xF8	-8 dBm	
			Neg12dBm	0xF4	-12 dBm	
			Neg16dBm	0xF0	-16 dBm	
			Neg20dBm	0xEC	-20 dBm	
			Neg30dBm	0xD8	-40 dBm	Deprecated
			Neg40dBm	0xD8	-40 dBm	

23.14.11 MODE

Address offset: 0x510

Data rate and modulation

Bit number				31	30	29	28	27	26	25	24	23	22	21	20	19	18	17	16	15	14	13	12	11	10	9	8	7	6	5	4	3	2	1	0
Id																																A	A	A	A
Reset 0x00000000				**0**	**0**	**0**	**0**	**0**	**0**	**0**	**0**	**0**	**0**	**0**	**0**	**0**	**0**	**0**	**0**	**0**	**0**	**0**	**0**	**0**	**0**	**0**	**0**	**0**	**0**	**0**	**0**	**0**	**0**	**0**	**0**
Id	**RW**	**Field**	**Value Id**	**Value**																															**Description**
A	RW	MODE																																	Radio data rate and modulation setting. The radio supports Frequency-shift Keying (FSK) modulation.
			Nrf_1Mbit	0																															1 Mbit/s Nordic proprietary radio mode
			Nrf_2Mbit	1																															2 Mbit/s Nordic proprietary radio mode
			Nrf_250Kbit	2																															250 kbit/s Nordic proprietary radio mode Deprecated
			Ble_1Mbit	3																															1 Mbit/s Bluetooth Low Energy

23.14.12 PCNF0

Address offset: 0x514

Packet configuration register 0

Bit number				31	30	29	28	27	26	25	24	23	22	21	20	19	18	17	16	15	14	13	12	11	10	9	8	7	6	5	4	3	2	1	0
Id											H				F	E	E	E	E								C					A	A	A	A
Reset 0x00000000				**0**	**0**	**0**	**0**	**0**	**0**	**0**	**0**	**0**	**0**	**0**	**0**	**0**	**0**	**0**	**0**	**0**	**0**	**0**	**0**	**0**	**0**	**0**	**0**	**0**	**0**	**0**	**0**	**0**	**0**	**0**	**0**
Id	**RW**	**Field**	**Value Id**	**Value**																															**Description**
A	RW	LFLEN																																	Length on air of LENGTH field in number of bits.
C	RW	S0LEN																																	Length on air of S0 field in number of bytes.
E	RW	S1LEN																																	Length on air of S1 field in number of bits.
F	RW	S1INCL																																	Include or exclude S1 field in RAM
			Automatic	0																															Include S1 field in RAM only if S1LEN > 0
			Include	1																															Always include S1 field in RAM independent of S1LEN
H	RW	PLEN																																	Length of preamble on air. Decision point: TASKS_START task
			8bit	0																															8-bit preamble
			16bit	1																															16-bit preamble

23.14.13 PCNF1

Address offset: 0x518

Packet configuration register 1

Bit number				31	30	29	28	27	26	25	24	23	22	21	20	19	18	17	16	15	14	13	12	11	10	9	8	7	6	5	4	3	2	1	0
Id										E	D						C	C	C	B	B	B	B	B	B	B	B	A	A	A	A	A	A	A	A
Reset 0x00000000				**0**	**0**	**0**	**0**	**0**	**0**	**0**	**0**	**0**	**0**	**0**	**0**	**0**	**0**	**0**	**0**	**0**	**0**	**0**	**0**	**0**	**0**	**0**	**0**	**0**	**0**	**0**	**0**	**0**	**0**	**0**	**0**
Id	**RW**	**Field**	**Value Id**	**Value**																															**Description**
A	RW	MAXLEN		[0..255]																															Maximum length of packet payload. If the packet payload is larger than MAXLEN, the radio will truncate the payload to MAXLEN.
B	RW	STATLEN		[0..255]																															Static length in number of bytes The static length parameter is added to the total length of the payload when sending and receiving packets, e.g. if the static length is set to N the radio will receive or send N bytes more than what is defined in the LENGTH field of the packet.
C	RW	BALEN		[2..4]																															Base address length in number of bytes The address field is composed of the base address and the one byte long address prefix, e.g. set BALEN=2 to get a total address of 3 bytes.
D	RW	ENDIAN																																	On air endianness of packet, this applies to the S0, LENGTH, S1 and the PAYLOAD fields.
			Little	0																															Least Significant bit on air first
			Big	1																															Most significant bit on air first
E	RW	WHITEEN																																	Enable or disable packet whitening
			Disabled	0																															Disable
			Enabled	1																															Enable

23.14.14 BASE0

Address offset: 0x51C

Base address 0

Bit number	31	30	29	28	27	26	25	24	23	22	21	20	19	18	17	16	15	14	13	12	11	10	9	8	7	6	5	4	3	2	1	0
Id	A	A	A	A	A	A	A	A	A	A	A	A	A	A	A	A	A	A	A	A	A	A	A	A	A	A	A	A	A	A	A	A
Reset 0x00000000	**0**	**0**	**0**	**0**	**0**	**0**	**0**	**0**	**0**	**0**	**0**	**0**	**0**	**0**	**0**	**0**	**0**	**0**	**0**	**0**	**0**	**0**	**0**	**0**	**0**	**0**	**0**	**0**	**0**	**0**	**0**	**0**

Id	RW	Field	Value Id	Value	Description
A	RW	BASE0			Base address 0 Radio base address 0.

23.14.15 BASE1

Address offset: 0x520

Base address 1

Bit number	31	30	29	28	27	26	25	24	23	22	21	20	19	18	17	16	15	14	13	12	11	10	9	8	7	6	5	4	3	2	1	0
Id	A	A	A	A	A	A	A	A	A	A	A	A	A	A	A	A	A	A	A	A	A	A	A	A	A	A	A	A	A	A	A	A
Reset 0x00000000	**0**	**0**	**0**	**0**	**0**	**0**	**0**	**0**	**0**	**0**	**0**	**0**	**0**	**0**	**0**	**0**	**0**	**0**	**0**	**0**	**0**	**0**	**0**	**0**	**0**	**0**	**0**	**0**	**0**	**0**	**0**	**0**

Id	RW	Field	Value Id	Value	Description
A	RW	BASE1			Base address 1 Radio base address 1.

23.14.16 PREFIX0

Address offset: 0x524

Prefixes bytes for logical addresses 0-3

Bit number	31	30	29	28	27	26	25	24	23	22	21	20	19	18	17	16	15	14	13	12	11	10	9	8	7	6	5	4	3	2	1	0
Id	D	D	D	D	D	D	D	D	C	C	C	C	C	C	C	C	B	B	B	B	B	B	B	B	A	A	A	A	A	A	A	A
Reset 0x00000000	**0**	**0**	**0**	**0**	**0**	**0**	**0**	**0**	**0**	**0**	**0**	**0**	**0**	**0**	**0**	**0**	**0**	**0**	**0**	**0**	**0**	**0**	**0**	**0**	**0**	**0**	**0**	**0**	**0**	**0**	**0**	**0**

Id	RW	Field	Value Id	Value	Description
A	RW	AP0			Address prefix 0.
B	RW	AP1			Address prefix 1.
C	RW	AP2			Address prefix 2.
D	RW	AP3			Address prefix 3.

23.14.17 PREFIX1

Address offset: 0x528

Prefixes bytes for logical addresses 4-7

Bit number	31	30	29	28	27	26	25	24	23	22	21	20	19	18	17	16	15	14	13	12	11	10	9	8	7	6	5	4	3	2	1	0
Id	D	D	D	D	D	D	D	D	C	C	C	C	C	C	C	C	B	B	B	B	B	B	B	B	A	A	A	A	A	A	A	A
Reset 0x00000000	**0**	**0**	**0**	**0**	**0**	**0**	**0**	**0**	**0**	**0**	**0**	**0**	**0**	**0**	**0**	**0**	**0**	**0**	**0**	**0**	**0**	**0**	**0**	**0**	**0**	**0**	**0**	**0**	**0**	**0**	**0**	**0**

Id	RW	Field	Value Id	Value	Description
A	RW	AP4			Address prefix 4.
B	RW	AP5			Address prefix 5.
C	RW	AP6			Address prefix 6.
D	RW	AP7			Address prefix 7.

23.14.18 TXADDRESS

Address offset: 0x52C

Transmit address select

Bit number				31	30	29	28	27	26	25	24	23	22	21	20	19	18	17	16	15	14	13	12	11	10	9	8	7	6	5	4	3	2	1	0
Id																																	A	A	A
Reset 0x00000000				**0**	**0**	**0**	**0**	**0**	**0**	**0**	**0**	**0**	**0**	**0**	**0**	**0**	**0**	**0**	**0**	**0**	**0**	**0**	**0**	**0**	**0**	**0**	**0**	**0**	**0**	**0**	**0**	**0**	**0**	**0**	**0**
Id	**RW**	**Field**	**Value Id**	**Value**								**Description**																							
A	RW	TXADDRESS										Transmit address select Logical address to be used when transmitting a packet.																							

23.14.19 RXADDRESSES

Address offset: 0x530

Receive address select

Bit number				31	30	29	28	27	26	25	24	23	22	21	20	19	18	17	16	15	14	13	12	11	10	9	8	7	6	5	4	3	2	1	0
Id																												H	G	F	E	D	C	B	A
Reset 0x00000000				**0**	**0**	**0**	**0**	**0**	**0**	**0**	**0**	**0**	**0**	**0**	**0**	**0**	**0**	**0**	**0**	**0**	**0**	**0**	**0**	**0**	**0**	**0**	**0**	**0**	**0**	**0**	**0**	**0**	**0**	**0**	**0**
Id	**RW**	**Field**	**Value Id**	**Value**								**Description**																							
A	RW	ADDR0										Enable or disable reception on logical address 0.																							
			Disabled	0								Disable																							
			Enabled	1								Enable																							
B	RW	ADDR1										Enable or disable reception on logical address 1.																							
			Disabled	0								Disable																							
			Enabled	1								Enable																							
C	RW	ADDR2										Enable or disable reception on logical address 2.																							
			Disabled	0								Disable																							
			Enabled	1								Enable																							
D	RW	ADDR3										Enable or disable reception on logical address 3.																							
			Disabled	0								Disable																							
			Enabled	1								Enable																							
E	RW	ADDR4										Enable or disable reception on logical address 4.																							
			Disabled	0								Disable																							
			Enabled	1								Enable																							
F	RW	ADDR5										Enable or disable reception on logical address 5.																							
			Disabled	0								Disable																							
			Enabled	1								Enable																							
G	RW	ADDR6										Enable or disable reception on logical address 6.																							
			Disabled	0								Disable																							
			Enabled	1								Enable																							
H	RW	ADDR7										Enable or disable reception on logical address 7.																							
			Disabled	0								Disable																							
			Enabled	1								Enable																							

23.14.20 CRCCNF

Address offset: 0x534

CRC configuration

Bit number				31	30	29	28	27	26	25	24	23	22	21	20	19	18	17	16	15	14	13	12	11	10	9	8	7	6	5	4	3	2	1	0
Id																											B							A	A
Reset 0x00000000				**0**	**0**	**0**	**0**	**0**	**0**	**0**	**0**	**0**	**0**	**0**	**0**	**0**	**0**	**0**	**0**	**0**	**0**	**0**	**0**	**0**	**0**	**0**	**0**	**0**	**0**	**0**	**0**	**0**	**0**	**0**	**0**
Id	**RW**	**Field**	**Value Id**	**Value**								**Description**																							
A	RW	LEN		[1..3]								CRC length in number of bytes.																							
			Disabled	0								CRC length is zero and CRC calculation is disabled																							
			One	1								CRC length is one byte and CRC calculation is enabled																							
			Two	2								CRC length is two bytes and CRC calculation is enabled																							
			Three	3								CRC length is three bytes and CRC calculation is enabled																							
B	RW	SKIPADDR										Include or exclude packet address field out of CRC calculation.																							
			Include	0								CRC calculation includes address field																							
			Skip	1								CRC calculation does not include address field. The CRC calculation will start at the first byte after the address.																							

23.14.21 CRCPOLY

Address offset: 0x538

CRC polynomial

Bit number	31	30	29	28	27	26	25	24	23	22	21	20	19	18	17	16	15	14	13	12	11	10	9	8	7	6	5	4	3	2	1	0
Id									A	A	A	A	A	A	A	A	A	A	A	A	A	A	A	A	A	A	A	A	A	A	A	A
Reset 0x00000000	**0**	**0**	**0**	**0**	**0**	**0**	**0**	**0**	**0**	**0**	**0**	**0**	**0**	**0**	**0**	**0**	**0**	**0**	**0**	**0**	**0**	**0**	**0**	**0**	**0**	**0**	**0**	**0**	**0**	**0**	**0**	**0**

Id	RW	Field	Value Id	Value	Description
A	RW	CRCPOLY			CRC polynomial Each term in the CRC polynomial is mapped to a bit in this register which index corresponds to the term's exponent. The least significant term/bit is hard-wired internally to 1, and bit number 0 of the register content is ignored by the hardware. The following example is for an 8 bit CRC polynomial: x8 + x7 + x3 + x2 + 1 = 1 1000 1101 .

23.14.22 CRCINIT

Address offset: 0x53C

CRC initial value

Bit number	31	30	29	28	27	26	25	24	23	22	21	20	19	18	17	16	15	14	13	12	11	10	9	8	7	6	5	4	3	2	1	0
Id									A	A	A	A	A	A	A	A	A	A	A	A	A	A	A	A	A	A	A	A	A	A	A	A
Reset 0x00000000	**0**	**0**	**0**	**0**	**0**	**0**	**0**	**0**	**0**	**0**	**0**	**0**	**0**	**0**	**0**	**0**	**0**	**0**	**0**	**0**	**0**	**0**	**0**	**0**	**0**	**0**	**0**	**0**	**0**	**0**	**0**	**0**

Id	RW	Field	Value Id	Value	Description
A	RW	CRCINIT			CRC initial value Initial value for CRC calculation.

23.14.23 TIFS

Address offset: 0x544

Inter Frame Spacing in us

Bit number	31	30	29	28	27	26	25	24	23	22	21	20	19	18	17	16	15	14	13	12	11	10	9	8	7	6	5	4	3	2	1	0
Id																									A	A	A	A	A	A	A	A
Reset 0x00000000	**0**	**0**	**0**	**0**	**0**	**0**	**0**	**0**	**0**	**0**	**0**	**0**	**0**	**0**	**0**	**0**	**0**	**0**	**0**	**0**	**0**	**0**	**0**	**0**	**0**	**0**	**0**	**0**	**0**	**0**	**0**	**0**

Id	RW	Field	Value Id	Value	Description
A	RW	TIFS			Inter Frame Spacing in us Inter frame space is the time interval between two consecutive packets. It is defined as the time, in micro seconds, from the end of the last bit of the previous packet to the start of the first bit of the subsequent packet.

23.14.24 RSSISAMPLE

Address offset: 0x548

RSSI sample

Bit number	31	30	29	28	27	26	25	24	23	22	21	20	19	18	17	16	15	14	13	12	11	10	9	8	7	6	5	4	3	2	1	0
Id																										A	A	A	A	A	A	A
Reset 0x00000000	**0**	**0**	**0**	**0**	**0**	**0**	**0**	**0**	**0**	**0**	**0**	**0**	**0**	**0**	**0**	**0**	**0**	**0**	**0**	**0**	**0**	**0**	**0**	**0**	**0**	**0**	**0**	**0**	**0**	**0**	**0**	**0**

Id	RW	Field	Value Id	Value	Description
A	R	RSSISAMPLE		[0..127]	RSSI sample RSSI sample result. The value of this register is read as a positive value while the actual received signal strength is a negative value. Actual received signal strength is therefore as follows: received signal strength = -A dBm

23.14.25 STATE

Address offset: 0x550

Current radio state

Bit number				31	30	29	28	27	26	25	24	23	22	21	20	19	18	17	16	15	14	13	12	11	10	9	8	7	6	5	4	3	2	1	0
Id																																A	A	A	A
Reset 0x00000000				**0**	**0**	**0**	**0**	**0**	**0**	**0**	**0**	**0**	**0**	**0**	**0**	**0**	**0**	**0**	**0**	**0**	**0**	**0**	**0**	**0**	**0**	**0**	**0**	**0**	**0**	**0**	**0**	**0**	**0**	**0**	**0**
Id	**RW**	**Field**	**Value Id**	**Value**								**Description**																							
A	R	STATE										Current radio state																							
			Disabled	0								RADIO is in the Disabled state																							
			RxRu	1								RADIO is in the RXRU state																							
			RxIdle	2								RADIO is in the RXIDLE state																							
			Rx	3								RADIO is in the RX state																							
			RxDisable	4								RADIO is in the RXDISABLED state																							
			TxRu	9								RADIO is in the TXRU state																							
			TxIdle	10								RADIO is in the TXIDLE state																							
			Tx	11								RADIO is in the TX state																							
			TxDisable	12								RADIO is in the TXDISABLED state																							

23.14.26 DATAWHITEIV

Address offset: 0x554

Data whitening initial value

Bit number				31	30	29	28	27	26	25	24	23	22	21	20	19	18	17	16	15	14	13	12	11	10	9	8	7	6	5	4	3	2	1	0
Id																													A	A	A	A	A	A	A
Reset 0x00000040				**0**	**0**	**0**	**0**	**0**	**0**	**0**	**0**	**0**	**0**	**0**	**0**	**0**	**0**	**0**	**0**	**0**	**0**	**0**	**0**	**0**	**0**	**0**	**0**	**0**	**1**	**0**	**0**	**0**	**0**	**0**	**0**
Id	**RW**	**Field**	**Value Id**	**Value**								**Description**																							
A	RW	DATAWHITEIV										Data whitening initial value. Bit 6 is hard-wired to '1', writing '0' to it has no effect, and it will always be read back and used by the device as '1'. Bit 0 corresponds to Position 6 of the LSFR, Bit 1 to Position 5, etc.																													

23.14.27 BCC

Address offset: 0x560

Bit counter compare

Bit number				31	30	29	28	27	26	25	24	23	22	21	20	19	18	17	16	15	14	13	12	11	10	9	8	7	6	5	4	3	2	1	0
Id				A	A	A	A	A	A	A	A	A	A	A	A	A	A	A	A	A	A	A	A	A	A	A	A	A	A	A	A	A	A	A	A
Reset 0x00000000				**0**	**0**	**0**	**0**	**0**	**0**	**0**	**0**	**0**	**0**	**0**	**0**	**0**	**0**	**0**	**0**	**0**	**0**	**0**	**0**	**0**	**0**	**0**	**0**	**0**	**0**	**0**	**0**	**0**	**0**	**0**	**0**
Id	**RW**	**Field**	**Value Id**	**Value**								**Description**																							
A	RW	BCC										Bit counter compare Bit counter compare register																							

23.14.28 DAB[0]

Address offset: 0x600

Device address base segment 0

Bit number				31	30	29	28	27	26	25	24	23	22	21	20	19	18	17	16	15	14	13	12	11	10	9	8	7	6	5	4	3	2	1	0
Id				A	A	A	A	A	A	A	A	A	A	A	A	A	A	A	A	A	A	A	A	A	A	A	A	A	A	A	A	A	A	A	A
Reset 0x00000000				**0**	**0**	**0**	**0**	**0**	**0**	**0**	**0**	**0**	**0**	**0**	**0**	**0**	**0**	**0**	**0**	**0**	**0**	**0**	**0**	**0**	**0**	**0**	**0**	**0**	**0**	**0**	**0**	**0**	**0**	**0**	**0**
Id	**RW**	**Field**	**Value Id**	**Value**								**Description**																							
A	RW	DAB										Device address base segment 0																							

23.14.29 DAB[1]

Address offset: 0x604

Device address base segment 1

Bit number	31	30	29	28	27	26	25	24	23	22	21	20	19	18	17	16	15	14	13	12	11	10	9	8	7	6	5	4	3	2	1	0
Id	A	A	A	A	A	A	A	A	A	A	A	A	A	A	A	A	A	A	A	A	A	A	A	A	A	A	A	A	A	A	A	A
Reset 0x00000000	**0**	**0**	**0**	**0**	**0**	**0**	**0**	**0**	**0**	**0**	**0**	**0**	**0**	**0**	**0**	**0**	**0**	**0**	**0**	**0**	**0**	**0**	**0**	**0**	**0**	**0**	**0**	**0**	**0**	**0**	**0**	**0**

Id	RW	Field	Value Id	Value	Description
A	RW	DAB			Device address base segment 1

23.14.30 DAB[2]

Address offset: 0x608

Device address base segment 2

Bit number	31	30	29	28	27	26	25	24	23	22	21	20	19	18	17	16	15	14	13	12	11	10	9	8	7	6	5	4	3	2	1	0
Id	A	A	A	A	A	A	A	A	A	A	A	A	A	A	A	A	A	A	A	A	A	A	A	A	A	A	A	A	A	A	A	A
Reset 0x00000000	**0**	**0**	**0**	**0**	**0**	**0**	**0**	**0**	**0**	**0**	**0**	**0**	**0**	**0**	**0**	**0**	**0**	**0**	**0**	**0**	**0**	**0**	**0**	**0**	**0**	**0**	**0**	**0**	**0**	**0**	**0**	**0**

Id	RW	Field	Value Id	Value	Description
A	RW	DAB			Device address base segment 2

23.14.31 DAB[3]

Address offset: 0x60C

Device address base segment 3

Bit number	31	30	29	28	27	26	25	24	23	22	21	20	19	18	17	16	15	14	13	12	11	10	9	8	7	6	5	4	3	2	1	0
Id	A	A	A	A	A	A	A	A	A	A	A	A	A	A	A	A	A	A	A	A	A	A	A	A	A	A	A	A	A	A	A	A
Reset 0x00000000	**0**	**0**	**0**	**0**	**0**	**0**	**0**	**0**	**0**	**0**	**0**	**0**	**0**	**0**	**0**	**0**	**0**	**0**	**0**	**0**	**0**	**0**	**0**	**0**	**0**	**0**	**0**	**0**	**0**	**0**	**0**	**0**

Id	RW	Field	Value Id	Value	Description
A	RW	DAB			Device address base segment 3

23.14.32 DAB[4]

Address offset: 0x610

Device address base segment 4

Bit number	31	30	29	28	27	26	25	24	23	22	21	20	19	18	17	16	15	14	13	12	11	10	9	8	7	6	5	4	3	2	1	0
Id	A	A	A	A	A	A	A	A	A	A	A	A	A	A	A	A	A	A	A	A	A	A	A	A	A	A	A	A	A	A	A	A
Reset 0x00000000	**0**	**0**	**0**	**0**	**0**	**0**	**0**	**0**	**0**	**0**	**0**	**0**	**0**	**0**	**0**	**0**	**0**	**0**	**0**	**0**	**0**	**0**	**0**	**0**	**0**	**0**	**0**	**0**	**0**	**0**	**0**	**0**

Id	RW	Field	Value Id	Value	Description
A	RW	DAB			Device address base segment 4

23.14.33 DAB[5]

Address offset: 0x614

Device address base segment 5

Bit number	31	30	29	28	27	26	25	24	23	22	21	20	19	18	17	16	15	14	13	12	11	10	9	8	7	6	5	4	3	2	1	0
Id	A	A	A	A	A	A	A	A	A	A	A	A	A	A	A	A	A	A	A	A	A	A	A	A	A	A	A	A	A	A	A	A
Reset 0x00000000	**0**	**0**	**0**	**0**	**0**	**0**	**0**	**0**	**0**	**0**	**0**	**0**	**0**	**0**	**0**	**0**	**0**	**0**	**0**	**0**	**0**	**0**	**0**	**0**	**0**	**0**	**0**	**0**	**0**	**0**	**0**	**0**

Id	RW	Field	Value Id	Value	Description
A	RW	DAB			Device address base segment 5

23.14.34 DAB[6]

Address offset: 0x618

Device address base segment 6

Bit number	31	30	29	28	27	26	25	24	23	22	21	20	19	18	17	16	15	14	13	12	11	10	9	8	7	6	5	4	3	2	1	0
Id	A	A	A	A	A	A	A	A	A	A	A	A	A	A	A	A	A	A	A	A	A	A	A	A	A	A	A	A	A	A	A	A
Reset 0x00000000	**0**	**0**	**0**	**0**	**0**	**0**	**0**	**0**	**0**	**0**	**0**	**0**	**0**	**0**	**0**	**0**	**0**	**0**	**0**	**0**	**0**	**0**	**0**	**0**	**0**	**0**	**0**	**0**	**0**	**0**	**0**	**0**

Id	RW	Field	Value Id	Value	Description
A	RW	DAB			Device address base segment 6

23.14.35 DAB[7]

Address offset: 0x61C

Device address base segment 7

Bit number	31	30	29	28	27	26	25	24	23	22	21	20	19	18	17	16	15	14	13	12	11	10	9	8	7	6	5	4	3	2	1	0
Id	A	A	A	A	A	A	A	A	A	A	A	A	A	A	A	A	A	A	A	A	A	A	A	A	A	A	A	A	A	A	A	A
Reset 0x00000000	**0**	**0**	**0**	**0**	**0**	**0**	**0**	**0**	**0**	**0**	**0**	**0**	**0**	**0**	**0**	**0**	**0**	**0**	**0**	**0**	**0**	**0**	**0**	**0**	**0**	**0**	**0**	**0**	**0**	**0**	**0**	**0**

Id	RW	Field	Value Id	Value	Description
A	RW	DAB			Device address base segment 7

23.14.36 DAP[0]

Address offset: 0x620

Device address prefix 0

Bit number	31	30	29	28	27	26	25	24	23	22	21	20	19	18	17	16	15	14	13	12	11	10	9	8	7	6	5	4	3	2	1	0
Id																	A	A	A	A	A	A	A	A	A	A	A	A	A	A	A	A
Reset 0x00000000	**0**	**0**	**0**	**0**	**0**	**0**	**0**	**0**	**0**	**0**	**0**	**0**	**0**	**0**	**0**	**0**	**0**	**0**	**0**	**0**	**0**	**0**	**0**	**0**	**0**	**0**	**0**	**0**	**0**	**0**	**0**	**0**

Id	RW	Field	Value Id	Value	Description
A	RW	DAP			Device address prefix 0

23.14.37 DAP[1]

Address offset: 0x624

Device address prefix 1

Bit number	31	30	29	28	27	26	25	24	23	22	21	20	19	18	17	16	15	14	13	12	11	10	9	8	7	6	5	4	3	2	1	0
Id																	A	A	A	A	A	A	A	A	A	A	A	A	A	A	A	A
Reset 0x00000000	**0**	**0**	**0**	**0**	**0**	**0**	**0**	**0**	**0**	**0**	**0**	**0**	**0**	**0**	**0**	**0**	**0**	**0**	**0**	**0**	**0**	**0**	**0**	**0**	**0**	**0**	**0**	**0**	**0**	**0**	**0**	**0**

Id	RW	Field	Value Id	Value	Description
A	RW	DAP			Device address prefix 1

23.14.38 DAP[2]

Address offset: 0x628

Device address prefix 2

Bit number	31	30	29	28	27	26	25	24	23	22	21	20	19	18	17	16	15	14	13	12	11	10	9	8	7	6	5	4	3	2	1	0
Id																	A	A	A	A	A	A	A	A	A	A	A	A	A	A	A	A
Reset 0x00000000	**0**	**0**	**0**	**0**	**0**	**0**	**0**	**0**	**0**	**0**	**0**	**0**	**0**	**0**	**0**	**0**	**0**	**0**	**0**	**0**	**0**	**0**	**0**	**0**	**0**	**0**	**0**	**0**	**0**	**0**	**0**	**0**

Id	RW	Field	Value Id	Value	Description
A	RW	DAP			Device address prefix 2

23.14.39 DAP[3]

Address offset: 0x62C

Device address prefix 3

Bit number	31	30	29	28	27	26	25	24	23	22	21	20	19	18	17	16	15	14	13	12	11	10	9	8	7	6	5	4	3	2	1	0
Id																	A	A	A	A	A	A	A	A	A	A	A	A	A	A	A	A
Reset 0x00000000	**0**	**0**	**0**	**0**	**0**	**0**	**0**	**0**	**0**	**0**	**0**	**0**	**0**	**0**	**0**	**0**	**0**	**0**	**0**	**0**	**0**	**0**	**0**	**0**	**0**	**0**	**0**	**0**	**0**	**0**	**0**	**0**

Id	RW	Field	Value Id	Value	Description
A	RW	DAP			Device address prefix 3

23.14.40 DAP[4]

Address offset: 0x630

Device address prefix 4

Bit number	31	30	29	28	27	26	25	24	23	22	21	20	19	18	17	16	15	14	13	12	11	10	9	8	7	6	5	4	3	2	1	0
Id																	A	A	A	A	A	A	A	A	A	A	A	A	A	A	A	A
Reset 0x00000000	**0**	**0**	**0**	**0**	**0**	**0**	**0**	**0**	**0**	**0**	**0**	**0**	**0**	**0**	**0**	**0**	**0**	**0**	**0**	**0**	**0**	**0**	**0**	**0**	**0**	**0**	**0**	**0**	**0**	**0**	**0**	**0**

Id	RW	Field	Value Id	Value	Description
A	RW	DAP			Device address prefix 4

23.14.41 DAP[5]

Address offset: 0x634

Device address prefix 5

Bit number	31	30	29	28	27	26	25	24	23	22	21	20	19	18	17	16	15	14	13	12	11	10	9	8	7	6	5	4	3	2	1	0
Id																	A	A	A	A	A	A	A	A	A	A	A	A	A	A	A	A
Reset 0x00000000	**0**	**0**	**0**	**0**	**0**	**0**	**0**	**0**	**0**	**0**	**0**	**0**	**0**	**0**	**0**	**0**	**0**	**0**	**0**	**0**	**0**	**0**	**0**	**0**	**0**	**0**	**0**	**0**	**0**	**0**	**0**	**0**

Id	RW	Field	Value Id	Value	Description
A	RW	DAP			Device address prefix 5

23.14.42 DAP[6]

Address offset: 0x638

Device address prefix 6

Bit number	31	30	29	28	27	26	25	24	23	22	21	20	19	18	17	16	15	14	13	12	11	10	9	8	7	6	5	4	3	2	1	0
Id																	A	A	A	A	A	A	A	A	A	A	A	A	A	A	A	A
Reset 0x00000000	**0**	**0**	**0**	**0**	**0**	**0**	**0**	**0**	**0**	**0**	**0**	**0**	**0**	**0**	**0**	**0**	**0**	**0**	**0**	**0**	**0**	**0**	**0**	**0**	**0**	**0**	**0**	**0**	**0**	**0**	**0**	**0**

Id	RW	Field	Value Id	Value	Description
A	RW	DAP			Device address prefix 6

23.14.43 DAP[7]

Address offset: 0x63C

Device address prefix 7

Bit number	31	30	29	28	27	26	25	24	23	22	21	20	19	18	17	16	15	14	13	12	11	10	9	8	7	6	5	4	3	2	1	0
Id																	A	A	A	A	A	A	A	A	A	A	A	A	A	A	A	A
Reset 0x00000000	**0**	**0**	**0**	**0**	**0**	**0**	**0**	**0**	**0**	**0**	**0**	**0**	**0**	**0**	**0**	**0**	**0**	**0**	**0**	**0**	**0**	**0**	**0**	**0**	**0**	**0**	**0**	**0**	**0**	**0**	**0**	**0**

Id	RW	Field	Value Id	Value	Description
A	RW	DAP			Device address prefix 7

23.14.44 DACNF

Address offset: 0x640

Device address match configuration

Bit number	31	30	29	28	27	26	25	24	23	22	21	20	19	18	17	16	15	14	13	12	11	10	9	8	7	6	5	4	3	2	1	0
Id																	P	O	N	M	L	K	J	I	H	G	F	E	D	C	B	A
Reset 0x00000000	**0**	**0**	**0**	**0**	**0**	**0**	**0**	**0**	**0**	**0**	**0**	**0**	**0**	**0**	**0**	**0**	**0**	**0**	**0**	**0**	**0**	**0**	**0**	**0**	**0**	**0**	**0**	**0**	**0**	**0**	**0**	**0**

Id	RW	Field	Value Id	Value	Description
A	RW	ENA0			Enable or disable device address matching using device address 0
			Disabled	0	Disabled
			Enabled	1	Enabled
B	RW	ENA1			Enable or disable device address matching using device address 1
			Disabled	0	Disabled

Bit number				31	30	29	28	27	26	25	24	23	22	21	20	19	18	17	16	15	14	13	12	11	10	9	8	7	6	5	4	3	2	1	0
Id																				P	O	N	M	L	K	J	I	H	G	F	E	D	C	B	A
Reset 0x00000000				**0**	**0**	**0**	**0**	**0**	**0**	**0**	**0**	**0**	**0**	**0**	**0**	**0**	**0**	**0**	**0**	**0**	**0**	**0**	**0**	**0**	**0**	**0**	**0**	**0**	**0**	**0**	**0**	**0**	**0**	**0**	**0**
Id	**RW**	**Field**	**Value Id**	**Value**								**Description**																							
			Enabled	1								Enabled																							
C	RW	ENA2										Enable or disable device address matching using device address 2																							
			Disabled	0								Disabled																							
			Enabled	1								Enabled																							
D	RW	ENA3										Enable or disable device address matching using device address 3																							
			Disabled	0								Disabled																							
			Enabled	1								Enabled																							
E	RW	ENA4										Enable or disable device address matching using device address 4																							
			Disabled	0								Disabled																							
			Enabled	1								Enabled																							
F	RW	ENA5										Enable or disable device address matching using device address 5																							
			Disabled	0								Disabled																							
			Enabled	1								Enabled																							
G	RW	ENA6										Enable or disable device address matching using device address 6																							
			Disabled	0								Disabled																							
			Enabled	1								Enabled																							
H	RW	ENA7										Enable or disable device address matching using device address 7																							
			Disabled	0								Disabled																							
			Enabled	1								Enabled																							
I	RW	TXADD0										TxAdd for device address 0																							
J	RW	TXADD1										TxAdd for device address 1																							
K	RW	TXADD2										TxAdd for device address 2																							
L	RW	TXADD3										TxAdd for device address 3																							
M	RW	TXADD4										TxAdd for device address 4																							
N	RW	TXADD5										TxAdd for device address 5																							
O	RW	TXADD6										TxAdd for device address 6																							
P	RW	TXADD7										TxAdd for device address 7																							

23.14.45 MODECNF0

Address offset: 0x650

Radio mode configuration register 0

Bit number				31	30	29	28	27	26	25	24	23	22	21	20	19	18	17	16	15	14	13	12	11	10	9	8	7	6	5	4	3	2	1	0
Id																										C	C								A
Reset 0x00000200				**0**	**0**	**0**	**0**	**0**	**0**	**0**	**0**	**0**	**0**	**0**	**0**	**0**	**0**	**0**	**0**	**0**	**0**	**0**	**0**	**0**	**0**	**1**	**0**	**0**	**0**	**0**	**0**	**0**	**0**	**0**	**0**
Id	**RW**	**Field**	**Value Id**	**Value**								**Description**																							
A	RW	RU										Radio ramp-up time																							
			Default	0								Default ramp-up time (tRXEN), compatible with firmware written for nRF51																							
			Fast	1								Fast ramp-up (tRXEN,FAST), see electrical specification for more information																							
C	RW	DTX										Default TX value Specifies what the RADIO will transmit when it is not started, i.e. between: RADIO.EVENTS_READY and RADIO.TASKS_START RADIO.EVENTS_END and RADIO.TASKS_START																							

Bit number				31	30	29	28	27	26	25	24	23	22	21	20	19	18	17	16	15	14	13	12	11	10	9	8	7	6	5	4	3	2	1	0
Id																										C	C								A
Reset 0x00000200				**0**	**0**	**0**	**0**	**0**	**0**	**0**	**0**	**0**	**0**	**0**	**0**	**0**	**0**	**0**	**0**	**0**	**0**	**0**	**0**	**0**	**0**	**1**	**0**	**0**	**0**	**0**	**0**	**0**	**0**	**0**	**0**
Id	**RW**	**Field**	**Value Id**	**Value**								**Description**																							
												RADIO.EVENTS_END and RADIO.EVENTS_DISABLED																							
			B1	0								Transmit '1'																							
			B0	1								Transmit '0'																							
			Center	2								Transmit center frequency																							
												When tuning the crystal for centre frequency, the RADIO must be set in DTX = Center mode to be able to achieve the expected accuracy.																							

23.14.46 POWER

Address offset: 0xFFC

Peripheral power control

Bit number				31	30	29	28	27	26	25	24	23	22	21	20	19	18	17	16	15	14	13	12	11	10	9	8	7	6	5	4	3	2	1	0
Id																																			A
Reset 0x00000001				**0**	**0**	**0**	**0**	**0**	**0**	**0**	**0**	**0**	**0**	**0**	**0**	**0**	**0**	**0**	**0**	**0**	**0**	**0**	**0**	**0**	**0**	**0**	**0**	**0**	**0**	**0**	**0**	**0**	**0**	**0**	**1**
Id	**RW**	**Field**	**Value Id**	**Value**								**Description**																							
A	RW	POWER										Peripheral power control. The peripheral and its registers will be reset to its initial state by switching the peripheral off and then back on again.																							
			Disabled	0								Peripheral is powered off																							
			Enabled	1								Peripheral is powered on																							

23.15 Electrical Specification

23.15.1 General Radio Characteristics

Symbol	Description	Min.	Typ.	Max.	Units
f_{OP}	Operating frequencies	2360		2500	MHz
$f_{PLL,PROG,RES}$	PLL programming resolution		2		kHz
$f_{PLL,CH,SP}$	PLL channel spacing		1		MHz
$f_{DELTA,1M}$	Frequency deviation @ 1 Msps		±170		kHz
$f_{DELTA,BLE,1M}$	Frequency deviation @ BLE 1Msps		±250		kHz
$f_{DELTA,2M}$	Frequency deviation @ 2 Msps		±320		kHz
fsk_{SPS}	On-the-air data rate	1		2	Msps

23.15.2 Radio current consumption (Transmitter)

Symbol	Description	Min.	Typ.	Max.	Units
$I_{TX,PLUS4dBM,DCDC}$	TX only run current (DCDC, 3V) P_{RF} =+4 dBm		7.5		mA
$I_{TX,PLUS4dBM}$	TX only run current P_{RF} = +4 dBm		16.6		mA
$I_{TX,0dBM,DCDC}$	TX only run current (DCDC, 3V)P_{RF} = 0dBm		5.3		mA
$I_{TX,0dBM}$	TX only run current P_{RF} = 0dBm		11.6		mA
$I_{TX,MINUS4dBM,DCDC}$	TX only run current DCDC, 3V P_{RF} = -4dBm		4.2		mA
$I_{TX,MINUS4dBM}$	TX only run current P_{RF} = -4 dBm		9.3		mA
$I_{TX,MINUS8dBM,DCDC}$	TX only run current DCDC, 3V P_{RF} = -8 dBm		3.8		mA
$I_{TX,MINUS8dBM}$	TX only run current P_{RF} = -8 dBm		8.4		mA
$I_{TX,MINUS12dBM,DCDC}$	TX only run current DCDC, 3V P_{RF} = -12 dBm		3.5		mA
$I_{TX,MINUS12dBM}$	TX only run current P_{RF} = -12 dBm		7.7		mA
$I_{TX,MINUS16dBM,DCDC}$	TX only run current DCDC, 3V P_{RF} = -16 dBm		3.3		mA
$I_{TX,MINUS16dBM}$	TX only run current P_{RF} = -16 dBm		7.3		mA
$I_{TX,MINUS20dBM,DCDC}$	TX only run current DCDC, 3V P_{RF} = -20 dBm		3.2		mA
$I_{TX,MINUS20dBM}$	TX only run current P_{RF} = -20 dBm		7.0		mA
$I_{TX,MINUS40dBM,DCDC}$	TX only run current DCDC, 3V P_{RF} = -40 dBm		2.7		mA

Symbol	Description	Min.	Typ.	Max.	Units
$I_{TX,MINUS40dBM}$	TX only run current P_{RF} = -40 dBm		5.9		mA
$I_{START,TX,DCDC}$	TX start-up current DCDC, 3V, P_{RF} = 4 dBm		4.0		mA
$I_{START,TX}$	TX start-up current, P_{RF} = 4 dBm		8.8		mA

23.15.3 Radio current consumption (Receiver)

Symbol	Description	Min.	Typ.	Max.	Units
$I_{RX,1M,DCDC}$	RX only run current (DCDC, 3V) 1Msps / 1Msps BLE		5.4		mA
$I_{RX,1M}$	RX only run current 1Msps / 1Msps BLE		11.7		mA
$I_{RX,2M,DCDC}$	RX only run current (DCDC, 3V) 2Msps		5.8		mA
$I_{RX,2M}$	RX only run current 2Msps		12.9		mA
$I_{START,RX,1M,DCDC}$	RX start-up current (DCDC 3V) 1Msps / 1Msps BLE		3.5		mA
$I_{START,RX,1M}$	RX start-up current 1Msps / 1Msps BLE		7.5		mA

23.15.4 Transmitter specification

Symbol	Description	Min.	Typ.	Max.	Units
P_{RF}	Maximum output power		4	6	dBm
P_{RFC}	RF power control range		24		dB
P_{RFCR}	RF power accuracy			±4	dB
$P_{RF1,1}$	1st Adjacent Channel Transmit Power 1 MHz (1 Msps)		-25		dBc
$P_{RF2,1}$	2nd Adjacent Channel Transmit Power 2 MHz (1 Msps)		-50		dBc
$P_{RF1,2}$	1st Adjacent Channel Transmit Power 2 MHz (2 Msps)		-25		dBc
$P_{RF2,2}$	2nd Adjacent Channel Transmit Power 4 MHz (2 Msps)		-50		dBc

23.15.5 Receiver operation

Symbol	Description	Min.	Typ.	Max.	Units
$P_{RX,MAX}$	Maximum received signal strength at < 0.1% PER		0		dBm
$P_{SENS,IT,1M}$	Sensitivity, 1Msps nRF mode[15]		-93		dBm
$P_{SENS,IT,SP,1M,BLE}$	Sensitivity, 1Msps BLE ideal transmitter, <=37 bytes BER=1E-3[16]		-96		dBm
$P_{SENS,IT,LP,1M,BLE}$	Sensitivity, 1Msps BLE ideal transmitter >=128 bytes BER=1E-4 [17]		-95		dBm
$P_{SENS,IT,2M}$	Sensitivity, 2Msps nRF mode[18]		-89		dBm

23.15.6 RX selectivity

RX selectivity with equal modulation on interfering signal[19]

Symbol	Description	Min.	Typ.	Max.	Units
$C/I_{1M,co\text{-}channel}$	1Msps mode, Co-Channel interference		9		dB
$C/I_{1M,-1MHz}$	1 Msps mode, Adjacent (-1 MHz) interference		-2		dB
$C/I_{1M,+1MHz}$	1 Msps mode, Adjacent (+1 MHz) interference		-10		dB
$C/I_{1M,-2MHz}$	1 Msps mode, Adjacent (-2 MHz) interference		-19		dB
$C/I_{1M,+2MHz}$	1 Msps mode, Adjacent (+2 MHz) interference		-42		dB
$C/I_{1M,-3MHz}$	1 Msps mode, Adjacent (-3 MHz) interference		-38		dB
$C/I_{1M,+3MHz}$	1 Msps mode, Adjacent (+3 MHz) interference		-48		dB
$C/I_{1M,\pm6MHz}$	1 Msps mode, Adjacent (≥6 MHz) interference		-50		dB
$C/I_{1MBLE,co\text{-}channel}$	1 Msps BLE mode, Co-Channel interference		6		dB

15 Typical sensitivity applies when ADDR0 is used for receiver address correlation. When ADDR[1...7] are used for receiver address correlation, the typical sensitivity for this mode is degraded by 3dB.

16 As defined in the Bluetooth Core Specification v4.0 Volume 6: Core System Package (Low Energy Controller Volume)

17 Equivalent BER limit < 10E-04

18 Typical sensitivity applies when ADDR0 is used for receiver address correlation. When ADDR[1...7] are used for receiver address correlation, the typical sensitivity for this mode is degraded by 3dB.

19 Wanted signal level at PIN = -67 dBm. One interferer is used, having equal modulation as the wanted signal. The input power of the interferer where the sensitivity equals BER = 0.1% is presented

Symbol	Description	Min.	Typ.	Max.	Units
$C/I_{1MBLE,-1MHz}$	1 Msps BLE mode, Adjacent (-1 MHz) interference		-2		dB
$C/I_{1MBLE,+1MHz}$	1 Msps BLE mode, Adjacent (+1 MHz) interference		-9		dB
$C/I_{1MBLE,-2MHz}$	1 Msps BLE mode, Adjacent (-2 MHz) interference		-22		dB
$C/I_{1MBLE,+2MHz}$	1 Msps BLE mode, Adjacent (+2 MHz) interference		-46		dB
$C/I_{1MBLE,>3MHz}$	1 Msps BLE mode, Adjacent (≥3 MHz) interference		-50		dB
$C/I_{1MBLE,image}$	Image frequency Interference		-22		dB
$C/I_{1MBLE,image,1MHz}$	Adjacent (1 MHz) interference to in-band image frequency		-35		dB
$C/I_{2M,co-channel}$	2Msps mode, Co-Channel interference		10		dB
$C/I_{2M,-2MHz}$	2 Msps mode, Adjacent (-2 MHz) interference		6		dB
$C/I_{2M,+2MHz}$	2 Msps mode, Adjacent (+2 MHz) interference		-14		dB
$C/I_{2M,-4MHz}$	2 Msps mode, Adjacent (-4 MHz) interference		-20		dB
$C/I_{2M,+4MHz}$	2 Msps mode, Adjacent (+4 MHz) interference		-44		dB
$C/I_{2M,-6MHz}$	2 Msps mode, Adjacent (-6 MHz) interference		-42		dB
$C/I_{2M,+6MHz}$	2 Msps mode, Adjacent (+6 MHz) interference		-47		dB
$C/I_{2M,\geq12MHz}$	2 Msps mode, Adjacent (≥12 MHz) interference		-52		dB

23.15.7 RX intermodulation

RX intermodulation[20]

Symbol	Description	Min.	Typ.	Max.	Units
$P_{IMD,1M}$	IMD performance, 1 Msps, 3rd, 4th, and 5th offset channel		-33		dBm
$P_{IMD,1M,BLE}$	IMD performance, BLE 1 Msps, 3rd, 4th, and 5th offset channel		-30		dBm
$P_{IMD,2M}$	IMD performance, 2 Msps, 3rd, 4th, and 5th offset channel		-33		dBm

23.15.8 Radio timing

Symbol	Description	Min.	Typ.	Max.	Units
t_{TXEN}	Time between TXEN task and READY event after channel FREQUENCY configured		140		us
$t_{TXEN,FAST}$	Time between TXEN task and READY event after channel FREQUENCY configured (Fast Mode)		40		us
$t_{TXDISABLE}$	Time between DISABLE task and DISABLED event when the radio was in TX and mode is set to 1Msps		6		us
$t_{TXDISABLE,2M}$	Time between DISABLE task and DISABLED event when the radio was in TX and mode is set to 2Msps		4		us
t_{RXEN}	Time between the RXEN task and READY event after channel FREQUENCY configured in default mode		140		us
$t_{RXEN,FAST}$	Time between the RXEN task and READY event after channel FREQUENCY configured in fast mode		40		us
t_{SWITCH}	The minimum time taken to switch from RX to TX or TX to RX (channel FREQUENCY unchanged)		20		us
$t_{RXDISABLE}$	Time between DISABLE task and DISABLED event when the radio was in RX		0		us
$t_{TXCHAIN}$	TX chain delay		0.6		us
$t_{RXCHAIN}$	RX chain delay		9.4		us
$t_{RXCHAIN,2M}$	RX chain delay in 2Msps mode		5		us

23.15.9 Received Signal Strength Indicator (RSSI) specifications

Symbol	Description	Min.	Typ.	Max.	Units
$RSSI_{ACC}$	RSSI Accuracy Valid range -90 to -20 dBm		±2		dB
$RSSI_{RESOLUTION}$	RSSI resolution		1		dB
$RSSI_{PERIOD}$	Sample period		8		us

[20] Wanted signal level at PIN = -64 dBm. Two interferers with equal input power are used. The interferer closest in frequency is not modulated, the other interferer is modulated equal with the wanted signal. The input power of the interferers where the sensitivity equals BER = 0.1% is presented.

23.15.10 Jitter

Symbol	Description	Min.	Typ.	Max.	Units
$t_{DISABLEDJITTER}$	Jitter on DISABLED event relative to END event when shortcut between END and DISABLE is enabled.		0.25		us
$t_{READYJITTER}$	Jitter on READY event relative to TXEN and RXEN task.		0.25		us

23.15.11 Delay when disabling the RADIO

Symbol	Description	Min.	Typ.	Max.	Units
$t_{TXDISABLE,1M}$	Disable delay from TX. Delay between DISABLE and DISABLED for MODE = Nrf_1Mbit and MODE = Ble_1Mbit		6		us
$t_{RXDISABLE,1M}$	Disable delay from RX. Delay between DISABLE and DISABLED for MODE = Nrf_1Mbit and MODE = Ble_1Mbit		0		us

24 TIMER — Timer/counter

The TIMER can operate in two modes: timer and counter.

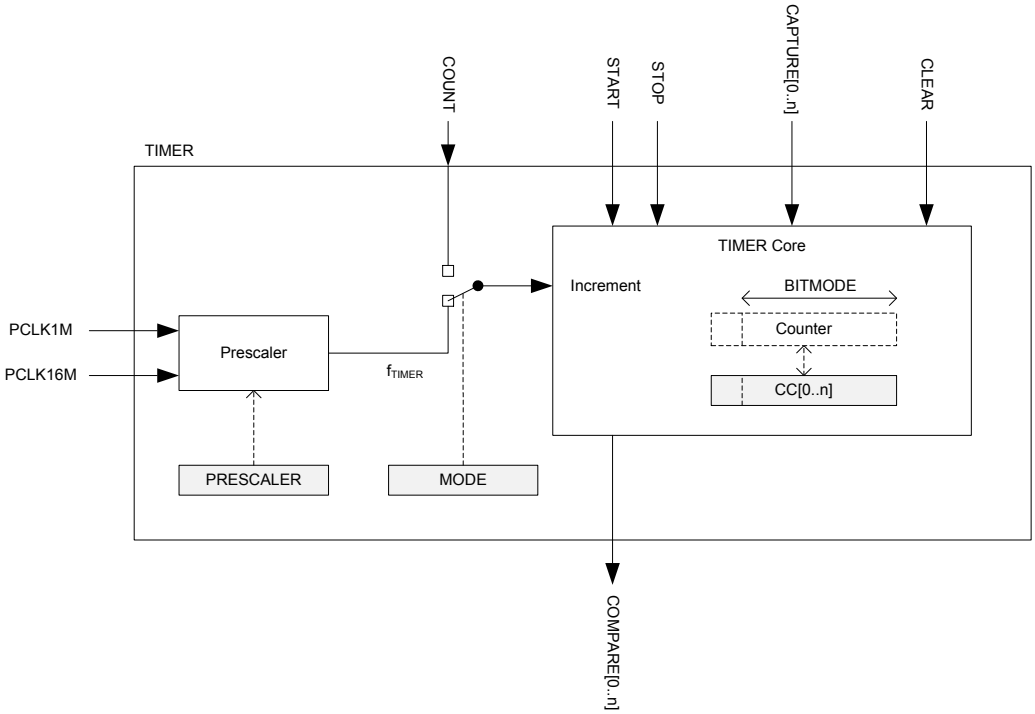

Figure 41: Block schematic for timer/counter

The timer/counter runs on the high-frequency clock source (HFCLK) and includes a four-bit (1/2X) prescaler that can divide the timer input clock from the HFCLK controller. Clock source selection between PCLK16M and PCLK1M is automatic according to TIMER base frequency set by the prescaler. The TIMER base frequency is always given as 16 MHz divided by the prescaler value.

The PPI system allows a TIMER event to trigger a task of any other system peripheral of the device. The PPI system also enables the TIMER task/event features to generate periodic output and PWM signals to any GPIO. The number of input/outputs used at the same time is limited by the number of GPIOTE channels.

The TIMER can operate in two modes, Timer mode and Counter mode. In both modes, the TIMER is started by triggering the START task, and stopped by triggering the STOP task. After the timer is stopped the timer can resume timing/counting by triggering the START task again. When timing/counting is resumed, the timer will continue from the value it had prior to being stopped.

In Timer mode, the TIMER's internal Counter register is incremented by one for every tick of the timer frequency f_{TIMER} as illustrated in *Figure 41: Block schematic for timer/counter* on page 230. The timer frequency is derived from PCLK16M as described in *Equation 1* using the values specified in the PRESCALER register:

$$f_{TIMER} = 16\ \text{MHz} / (2^{PRESCALER})$$

When f_{TIMER} <= 1 MHz the TIMER will use PCLK1M instead of PCLK16M for reduced power consumption.

In counter mode, the TIMER's internal Counter register is incremented by one each time the COUNT task is triggered, that is, the timer frequency and the prescaler are not utilized in counter mode. Similarly, the COUNT task has no effect in Timer mode.

The TIMER's maximum value is configured by changing the bit-width of the timer in the *BITMODE* on page 235 register.

PRESCALER on page 235 and the *BITMODE* on page 235 must only be updated when the timer is stopped. If these registers are updated while the TIMER is started then this may result in unpredictable behavior.

When the timer is incremented beyond its maximum value the Counter register will overflow and the TIMER will automatically start over from zero.

The Counter register can be cleared, that is, its internal value set to zero explicitly, by triggering the CLEAR task.

The TIMER implements multiple capture/compare registers.

Independent of prescaler setting the accuracy of the TIMER is equivalent to one tick of the timer frequency f_{TIMER} as illustrated in *Figure 41: Block schematic for timer/counter* on page 230.

24.1 Capture

The TIMER implements one capture task for every available capture/compare register.

Every time the CAPTURE[n] task is triggered, the Counter value is copied to the CC[n] register.

24.2 Compare

The TIMER implements one COMPARE event for every available capture/compare register.

A COMPARE event is generated when the Counter is incremented and then becomes equal to the value specified in one of the capture compare registers. When the Counter value becomes equal to the value specified in a capture compare register CC[n], the corresponding compare event COMPARE[n] is generated.

BITMODE on page 235 specifies how many bits of the Counter register and the capture/compare register that are used when the comparison is performed. Other bits will be ignored.

24.3 Task delays

After the TIMER is started, the CLEAR task, COUNT task and the STOP task will guarantee to take effect within one clock cycle of the PCLK16M.

24.4 Task priority

If the START task and the STOP task are triggered at the same time, that is, within the same period of PCLK16M, the STOP task will be prioritized.

24.5 Registers

Table 38: Instances

Base address	Peripheral	Instance	Description	Configuration
0x40008000	TIMER	TIMER0	Timer 0	This timer instance has 4 CC registers (CC[0..3])
0x40009000	TIMER	TIMER1	Timer 1	This timer instance has 4 CC registers (CC[0..3])

Base address	Peripheral	Instance	Description	Configuration
0x4000A000	TIMER	TIMER2	Timer 2	This timer instance has 4 CC registers (CC[0..3])
0x4001A000	TIMER	TIMER3	Timer 3	This timer instance has 6 CC registers (CC[0..5])
0x4001B000	TIMER	TIMER4	Timer 4	This timer instance has 6 CC registers (CC[0..5])

Table 39: Register Overview

Register	Offset	Description	
TASKS_START	0x000	Start Timer	
TASKS_STOP	0x004	Stop Timer	
TASKS_COUNT	0x008	Increment Timer (Counter mode only)	
TASKS_CLEAR	0x00C	Clear time	
TASKS_SHUTDOWN	0x010	Shut down timer	Deprecated
TASKS_CAPTURE[0]	0x040	Capture Timer value to CC[0] register	
TASKS_CAPTURE[1]	0x044	Capture Timer value to CC[1] register	
TASKS_CAPTURE[2]	0x048	Capture Timer value to CC[2] register	
TASKS_CAPTURE[3]	0x04C	Capture Timer value to CC[3] register	
TASKS_CAPTURE[4]	0x050	Capture Timer value to CC[4] register	
TASKS_CAPTURE[5]	0x054	Capture Timer value to CC[5] register	
EVENTS_COMPARE[0]	0x140	Compare event on CC[0] match	
EVENTS_COMPARE[1]	0x144	Compare event on CC[1] match	
EVENTS_COMPARE[2]	0x148	Compare event on CC[2] match	
EVENTS_COMPARE[3]	0x14C	Compare event on CC[3] match	
EVENTS_COMPARE[4]	0x150	Compare event on CC[4] match	
EVENTS_COMPARE[5]	0x154	Compare event on CC[5] match	
SHORTS	0x200	Shortcut register	
INTENSET	0x304	Enable interrupt	
INTENCLR	0x308	Disable interrupt	
MODE	0x504	Timer mode selection	
BITMODE	0x508	Configure the number of bits used by the TIMER	
PRESCALER	0x510	Timer prescaler register	
CC[0]	0x540	Capture/Compare register 0	
CC[1]	0x544	Capture/Compare register 1	
CC[2]	0x548	Capture/Compare register 2	
CC[3]	0x54C	Capture/Compare register 3	
CC[4]	0x550	Capture/Compare register 4	
CC[5]	0x554	Capture/Compare register 5	

24.5.1 SHORTS

Address offset: 0x200

Shortcut register

Bit number	31	30	29	28	27	26	25	24	23	22	21	20	19	18	17	16	15	14	13	12	11	10	9	8	7	6	5	4	3	2	1	0
Id																			M	L	K	J	I	H			F	E	D	C	B	A
Reset 0x00000000	**0**	**0**	**0**	**0**	**0**	**0**	**0**	**0**	**0**	**0**	**0**	**0**	**0**	**0**	**0**	**0**	**0**	**0**	**0**	**0**	**0**	**0**	**0**	**0**	**0**	**0**	**0**	**0**	**0**	**0**	**0**	**0**

Id	RW	Field	Value Id	Value	Description
A	RW	COMPARE0_CLEAR			Shortcut between COMPARE[0] event and CLEAR task See *EVENTS_COMPARE[0]* and *TASKS_CLEAR*
			Disabled	0	Disable shortcut
			Enabled	1	Enable shortcut
B	RW	COMPARE1_CLEAR			Shortcut between COMPARE[1] event and CLEAR task See *EVENTS_COMPARE[1]* and *TASKS_CLEAR*
			Disabled	0	Disable shortcut
			Enabled	1	Enable shortcut

Bit number				31	30	29	28	27	26	25	24	23	22	21	20	19	18	17	16	15	14	13	12	11	10	9	8	7	6	5	4	3	2	1	0
Id																						M	L	K	J	I	H			F	E	D	C	B	A
Reset 0x00000000				**0**	**0**	**0**	**0**	**0**	**0**	**0**	**0**	**0**	**0**	**0**	**0**	**0**	**0**	**0**	**0**	**0**	**0**	**0**	**0**	**0**	**0**	**0**	**0**	**0**	**0**	**0**	**0**	**0**	**0**	**0**	**0**
Id	**RW**	**Field**	**Value Id**	**Value**																															
C	RW	COMPARE2_CLEAR																																	
			Disabled	0																															
			Enabled	1																															
D	RW	COMPARE3_CLEAR																																	
			Disabled	0																															
			Enabled	1																															
E	RW	COMPARE4_CLEAR																																	
			Disabled	0																															
			Enabled	1																															
F	RW	COMPARE5_CLEAR																																	
			Disabled	0																															
			Enabled	1																															
H	RW	COMPARE0_STOP																																	
			Disabled	0																															
			Enabled	1																															
I	RW	COMPARE1_STOP																																	
			Disabled	0																															
			Enabled	1																															
J	RW	COMPARE2_STOP																																	
			Disabled	0																															
			Enabled	1																															
K	RW	COMPARE3_STOP																																	
			Disabled	0																															
			Enabled	1																															
L	RW	COMPARE4_STOP																																	
			Disabled	0																															
			Enabled	1																															
M	RW	COMPARE5_STOP																																	
			Disabled	0																															
			Enabled	1																															

24.5.2 INTENSET

Address offset: 0x304

Enable interrupt

Bit number				31	30	29	28	27	26	25	24	23	22	21	20	19	18	17	16	15	14	13	12	11	10	9	8	7	6	5	4	3	2	1	0
Id														F	E	D	C	B	A																
Reset 0x00000000				**0**	**0**	**0**	**0**	**0**	**0**	**0**	**0**	**0**	**0**	**0**	**0**	**0**	**0**	**0**	**0**	**0**	**0**	**0**	**0**	**0**	**0**	**0**	**0**	**0**	**0**	**0**	**0**	**0**	**0**	**0**	**0**
Id	**RW**	**Field**	**Value Id**	**Value**																															
A	RW	COMPARE0																																	

Bit number				31	30	29	28	27	26	25	24	23	22	21	20	19	18	17	16	15	14	13	12	11	10	9	8	7	6	5	4	3	2	1	0
Id														F	E	D	C	B	A																
Reset 0x00000000				**0**	**0**	**0**	**0**	**0**	**0**	**0**	**0**	**0**	**0**	**0**	**0**	**0**	**0**	**0**	**0**	**0**	**0**	**0**	**0**	**0**	**0**	**0**	**0**	**0**	**0**	**0**	**0**	**0**	**0**	**0**	**0**
Id	**RW**	**Field**	**Value Id**	**Value**										**Description**																					
														See *EVENTS_COMPARE[0]*																					
			Set	1										Enable																					
			Disabled	0										Read: Disabled																					
			Enabled	1										Read: Enabled																					
B	RW	COMPARE1												Write '1' to Enable interrupt for COMPARE[1] event See *EVENTS_COMPARE[1]*																					
			Set	1										Enable																					
			Disabled	0										Read: Disabled																					
			Enabled	1										Read: Enabled																					
C	RW	COMPARE2												Write '1' to Enable interrupt for COMPARE[2] event See *EVENTS_COMPARE[2]*																					
			Set	1										Enable																					
			Disabled	0										Read: Disabled																					
			Enabled	1										Read: Enabled																					
D	RW	COMPARE3												Write '1' to Enable interrupt for COMPARE[3] event See *EVENTS_COMPARE[3]*																					
			Set	1										Enable																					
			Disabled	0										Read: Disabled																					
			Enabled	1										Read: Enabled																					
E	RW	COMPARE4												Write '1' to Enable interrupt for COMPARE[4] event See *EVENTS_COMPARE[4]*																					
			Set	1										Enable																					
			Disabled	0										Read: Disabled																					
			Enabled	1										Read: Enabled																					
F	RW	COMPARE5												Write '1' to Enable interrupt for COMPARE[5] event See *EVENTS_COMPARE[5]*																					
			Set	1										Enable																					
			Disabled	0										Read: Disabled																					
			Enabled	1										Read: Enabled																					

24.5.3 INTENCLR

Address offset: 0x308

Disable interrupt

Bit number				31	30	29	28	27	26	25	24	23	22	21	20	19	18	17	16	15	14	13	12	11	10	9	8	7	6	5	4	3	2	1	0
Id														F	E	D	C	B	A																
Reset 0x00000000				**0**	**0**	**0**	**0**	**0**	**0**	**0**	**0**	**0**	**0**	**0**	**0**	**0**	**0**	**0**	**0**	**0**	**0**	**0**	**0**	**0**	**0**	**0**	**0**	**0**	**0**	**0**	**0**	**0**	**0**	**0**	**0**
Id	**RW**	**Field**	**Value Id**	**Value**										**Description**																					
A	RW	COMPARE0												Write '1' to Disable interrupt for COMPARE[0] event See *EVENTS_COMPARE[0]*																					
			Clear	1										Disable																					
			Disabled	0										Read: Disabled																					
			Enabled	1										Read: Enabled																					
B	RW	COMPARE1												Write '1' to Disable interrupt for COMPARE[1] event See *EVENTS_COMPARE[1]*																					
			Clear	1										Disable																					
			Disabled	0										Read: Disabled																					
			Enabled	1										Read: Enabled																					
C	RW	COMPARE2												Write '1' to Disable interrupt for COMPARE[2] event See *EVENTS_COMPARE[2]*																					
			Clear	1										Disable																					

Bit number				31	30	29	28	27	26	25	24	23	22	21	20	19	18	17	16	15	14	13	12	11	10	9	8	7	6	5	4	3	2	1	0
Id														F	E	D	C	B	A																
Reset 0x00000000				**0**	**0**	**0**	**0**	**0**	**0**	**0**	**0**	**0**	**0**	**0**	**0**	**0**	**0**	**0**	**0**	**0**	**0**	**0**	**0**	**0**	**0**	**0**	**0**	**0**	**0**	**0**	**0**	**0**	**0**	**0**	**0**
Id	**RW**	**Field**	**Value Id**	**Value**										**Description**																					
			Disabled	0										Read: Disabled																					
			Enabled	1										Read: Enabled																					
D	RW	COMPARE3												Write '1' to Disable interrupt for COMPARE[3] event See *EVENTS_COMPARE[3]*																					
			Clear	1										Disable																					
			Disabled	0										Read: Disabled																					
			Enabled	1										Read: Enabled																					
E	RW	COMPARE4												Write '1' to Disable interrupt for COMPARE[4] event See *EVENTS_COMPARE[4]*																					
			Clear	1										Disable																					
			Disabled	0										Read: Disabled																					
			Enabled	1										Read: Enabled																					
F	RW	COMPARE5												Write '1' to Disable interrupt for COMPARE[5] event See *EVENTS_COMPARE[5]*																					
			Clear	1										Disable																					
			Disabled	0										Read: Disabled																					
			Enabled	1										Read: Enabled																					

24.5.4 MODE

Address offset: 0x504

Timer mode selection

Bit number				31	30	29	28	27	26	25	24	23	22	21	20	19	18	17	16	15	14	13	12	11	10	9	8	7	6	5	4	3	2	1	0
Id																																		A	A
Reset 0x00000000				**0**	**0**	**0**	**0**	**0**	**0**	**0**	**0**	**0**	**0**	**0**	**0**	**0**	**0**	**0**	**0**	**0**	**0**	**0**	**0**	**0**	**0**	**0**	**0**	**0**	**0**	**0**	**0**	**0**	**0**	**0**	**0**
Id	**RW**	**Field**	**Value Id**	**Value**										**Description**																					
A	RW	MODE												Timer mode																					
			Timer	0										Select Timer mode																					
			Counter	1										Select Counter mode																			Deprecated		
			LowPowerCounter	2										Select Low Power Counter mode																					

24.5.5 BITMODE

Address offset: 0x508

Configure the number of bits used by the TIMER

Bit number				31	30	29	28	27	26	25	24	23	22	21	20	19	18	17	16	15	14	13	12	11	10	9	8	7	6	5	4	3	2	1	0
Id																																		A	A
Reset 0x00000000				**0**	**0**	**0**	**0**	**0**	**0**	**0**	**0**	**0**	**0**	**0**	**0**	**0**	**0**	**0**	**0**	**0**	**0**	**0**	**0**	**0**	**0**	**0**	**0**	**0**	**0**	**0**	**0**	**0**	**0**	**0**	**0**
Id	**RW**	**Field**	**Value Id**	**Value**										**Description**																					
A	RW	BITMODE												Timer bit width																					
			16Bit	0										16 bit timer bit width																					
			08Bit	1										8 bit timer bit width																					
			24Bit	2										24 bit timer bit width																					
			32Bit	3										32 bit timer bit width																					

24.5.6 PRESCALER

Address offset: 0x510

Timer prescaler register

Bit number	31	30	29	28	27	26	25	24	23	22	21	20	19	18	17	16	15	14	13	12	11	10	9	8	7	6	5	4	3	2	1	0
Id																													A	A	A	A
Reset 0x00000004	**0**	**0**	**0**	**0**	**0**	**0**	**0**	**0**	**0**	**0**	**0**	**0**	**0**	**0**	**0**	**0**	**0**	**0**	**0**	**0**	**0**	**0**	**0**	**0**	**0**	**0**	**0**	**0**	**0**	**1**	**0**	**0**

Id	RW	Field	Value Id	Value	Description
A	RW	PRESCALER		[0..9]	Prescaler value

24.5.7 CC[0]

Address offset: 0x540

Capture/Compare register 0

Bit number	31	30	29	28	27	26	25	24	23	22	21	20	19	18	17	16	15	14	13	12	11	10	9	8	7	6	5	4	3	2	1	0
Id	A	A	A	A	A	A	A	A	A	A	A	A	A	A	A	A	A	A	A	A	A	A	A	A	A	A	A	A	A	A	A	A
Reset 0x00000000	**0**	**0**	**0**	**0**	**0**	**0**	**0**	**0**	**0**	**0**	**0**	**0**	**0**	**0**	**0**	**0**	**0**	**0**	**0**	**0**	**0**	**0**	**0**	**0**	**0**	**0**	**0**	**0**	**0**	**0**	**0**	**0**

Id	RW	Field	Value Id	Value	Description
A	RW	CC			Capture/Compare value Only the number of bits indicated by BITMODE will be used by the TIMER.

24.5.8 CC[1]

Address offset: 0x544

Capture/Compare register 1

Bit number	31	30	29	28	27	26	25	24	23	22	21	20	19	18	17	16	15	14	13	12	11	10	9	8	7	6	5	4	3	2	1	0
Id	A	A	A	A	A	A	A	A	A	A	A	A	A	A	A	A	A	A	A	A	A	A	A	A	A	A	A	A	A	A	A	A
Reset 0x00000000	**0**	**0**	**0**	**0**	**0**	**0**	**0**	**0**	**0**	**0**	**0**	**0**	**0**	**0**	**0**	**0**	**0**	**0**	**0**	**0**	**0**	**0**	**0**	**0**	**0**	**0**	**0**	**0**	**0**	**0**	**0**	**0**

Id	RW	Field	Value Id	Value	Description
A	RW	CC			Capture/Compare value Only the number of bits indicated by BITMODE will be used by the TIMER.

24.5.9 CC[2]

Address offset: 0x548

Capture/Compare register 2

Bit number	31	30	29	28	27	26	25	24	23	22	21	20	19	18	17	16	15	14	13	12	11	10	9	8	7	6	5	4	3	2	1	0
Id	A	A	A	A	A	A	A	A	A	A	A	A	A	A	A	A	A	A	A	A	A	A	A	A	A	A	A	A	A	A	A	A
Reset 0x00000000	**0**	**0**	**0**	**0**	**0**	**0**	**0**	**0**	**0**	**0**	**0**	**0**	**0**	**0**	**0**	**0**	**0**	**0**	**0**	**0**	**0**	**0**	**0**	**0**	**0**	**0**	**0**	**0**	**0**	**0**	**0**	**0**

Id	RW	Field	Value Id	Value	Description
A	RW	CC			Capture/Compare value Only the number of bits indicated by BITMODE will be used by the TIMER.

24.5.10 CC[3]

Address offset: 0x54C

Capture/Compare register 3

Bit number	31	30	29	28	27	26	25	24	23	22	21	20	19	18	17	16	15	14	13	12	11	10	9	8	7	6	5	4	3	2	1	0
Id	A	A	A	A	A	A	A	A	A	A	A	A	A	A	A	A	A	A	A	A	A	A	A	A	A	A	A	A	A	A	A	A
Reset 0x00000000	**0**	**0**	**0**	**0**	**0**	**0**	**0**	**0**	**0**	**0**	**0**	**0**	**0**	**0**	**0**	**0**	**0**	**0**	**0**	**0**	**0**	**0**	**0**	**0**	**0**	**0**	**0**	**0**	**0**	**0**	**0**	**0**

Id	RW	Field	Value Id	Value	Description
A	RW	CC			Capture/Compare value Only the number of bits indicated by BITMODE will be used by the TIMER.

24.5.11 CC[4]

Address offset: 0x550

Capture/Compare register 4

Bit number	31	30	29	28	27	26	25	24	23	22	21	20	19	18	17	16	15	14	13	12	11	10	9	8	7	6	5	4	3	2	1	0
Id	A	A	A	A	A	A	A	A	A	A	A	A	A	A	A	A	A	A	A	A	A	A	A	A	A	A	A	A	A	A	A	A
Reset 0x00000000	**0**	**0**	**0**	**0**	**0**	**0**	**0**	**0**	**0**	**0**	**0**	**0**	**0**	**0**	**0**	**0**	**0**	**0**	**0**	**0**	**0**	**0**	**0**	**0**	**0**	**0**	**0**	**0**	**0**	**0**	**0**	**0**

Id	RW	Field	Value Id	Value	Description
A	RW	CC			Capture/Compare value Only the number of bits indicated by BITMODE will be used by the TIMER.

24.5.12 CC[5]

Address offset: 0x554

Capture/Compare register 5

Bit number	31	30	29	28	27	26	25	24	23	22	21	20	19	18	17	16	15	14	13	12	11	10	9	8	7	6	5	4	3	2	1	0
Id	A	A	A	A	A	A	A	A	A	A	A	A	A	A	A	A	A	A	A	A	A	A	A	A	A	A	A	A	A	A	A	A
Reset 0x00000000	**0**	**0**	**0**	**0**	**0**	**0**	**0**	**0**	**0**	**0**	**0**	**0**	**0**	**0**	**0**	**0**	**0**	**0**	**0**	**0**	**0**	**0**	**0**	**0**	**0**	**0**	**0**	**0**	**0**	**0**	**0**	**0**

Id	RW	Field	Value Id	Value	Description
A	RW	CC			Capture/Compare value Only the number of bits indicated by BITMODE will be used by the TIMER.

24.6 Electrical Specification

24.6.1 Timers Electrical Specification

Symbol	Description	Min.	Typ.	Max.	Units
I_{TIMER_1M}	Run current with 1 MHz clock input (PCLK1M)	3	5	8	µA
I_{TIMER_16M}	Run current with 16 MHz clock input (PCLK16M)	50	70	120	µA
$t_{TIMER,START}$	Time from START task is given until timer starts counting		0.25		µs

25 RTC — Real-time counter

The Real-time counter (RTC) module provides a generic, low power timer on the low-frequency clock source (LFCLK).

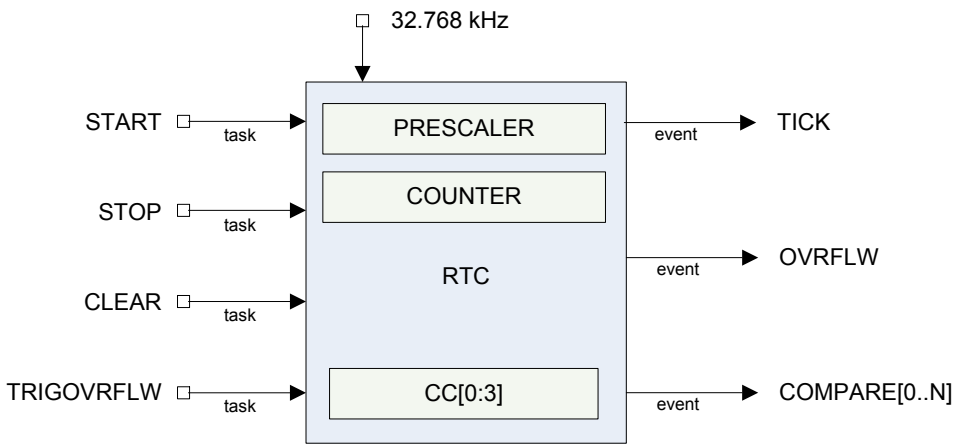

Figure 42: RTC block schematic

The RTC module features a 24-bit COUNTER, a 12-bit (1/X) prescaler, capture/compare registers, and a tick event generator for low power, tickless RTOS implementation.

25.1 Clock source

The RTC will run off the LFCLK.

The COUNTER resolution will therefore be 30.517 µs. Depending on the source, the RTC is able to run while the HFCLK is OFF and PCLK16M is not available.

The software has to explicitely start LFCLK before using the RTC.

See *CLOCK — Clock control* on page 98 for more information about clock sources.

25.2 Resolution versus overflow and the PRESCALER

Counter increment frequency:

$$f_{RTC}\ [kHz] = 32.768\ /\ (PRESCALER + 1\ )$$

The PRESCALER register is read/write when the RTC is stopped. The PRESCALER register is read-only once the RTC is STARTed. Writing to the PRESCALER register when the RTC is started has no effect.

The PRESCALER is restarted on START, CLEAR and TRIGOVRFLW, that is, the prescaler value is latched to an internal register (<<PRESC>>) on these tasks.

Examples:

1. Desired COUNTER frequency 100 Hz (10 ms counter period)

   PRESCALER = round(32.768 kHz / 100 Hz) - 1 = 327

   f_{RTC} = 99.9 Hz

10009.576 µs counter period

2. Desired COUNTER frequency 8 Hz (125 ms counter period)

   PRESCALER = round(32.768 kHz / 8 Hz) – 1 = 4095

   f_{RTC} = 8 Hz

   125 ms counter period

Table 40: RTC resolution versus overflow

Prescaler	Counter resolution	Overflow
0	30.517 µs	512 seconds
2^8-1	7812.5 µs	131072 seconds
2^{12}-1	125 ms	582.542 hours

25.3 COUNTER register

The COUNTER increments on LFCLK when the internal PRESCALER register (<<PRESC>>) is 0x00. <<PRESC>> is reloaded from the PRESCALER register. If enabled, the TICK event occurs on each increment of the COUNTER. The TICK event is disabled by default.

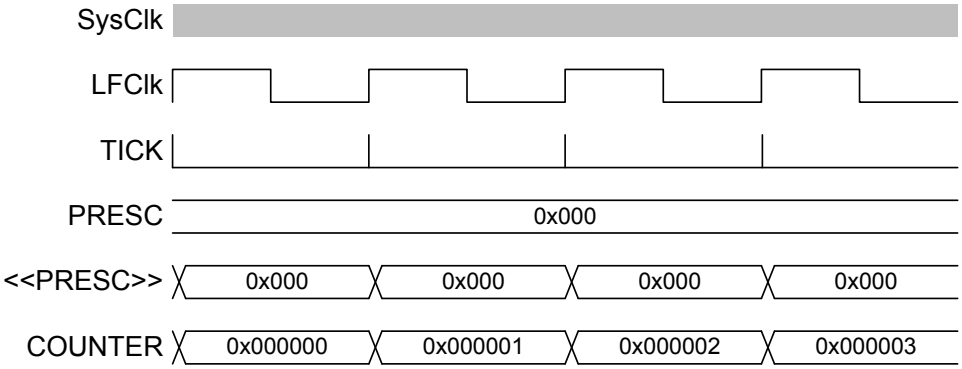

Figure 43: Timing diagram - COUNTER_PRESCALER_0

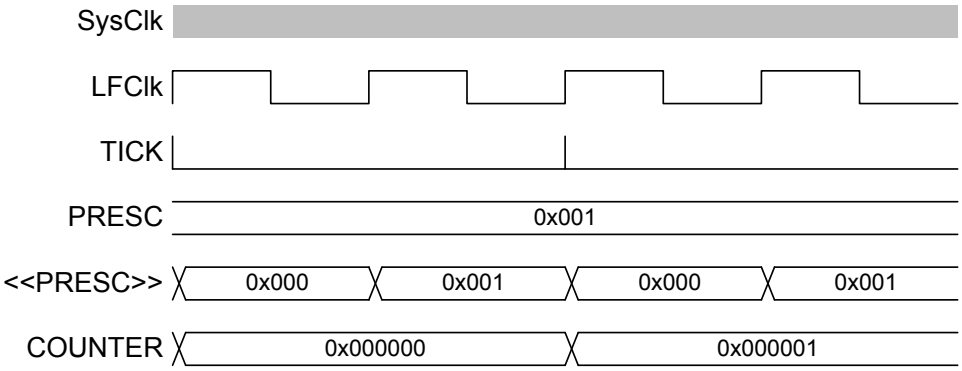

Figure 44: Timing diagram - COUNTER_PRESCALER_1

25.4 Overflow features

The TRIGOVRFLW task sets the COUNTER value to 0xFFFFF0 to allow SW test of the overflow condition.

OVRFLW occurs when COUNTER overflows from 0xFFFFFF to 0.

Important: The OVRFLW event is disabled by default.

25.5 TICK event

The TICK event enables low power "tick-less" RTOS implementation as it optionally provides a regular interrupt source for a RTOS without the need to use the ARM® SysTick feature.

Using the RTC TICK event rather than the SysTick allows the CPU to be powered down while still keeping RTOS scheduling active.

Important: The TICK event is disabled by default.

25.6 Event control feature

To optimize RTC power consumption, events in the RTC can be individually disabled to prevent PCLK16M and HFCLK being requested when those events are triggered. This is managed using the EVTEN register.

For example, if the TICK event is not required for an application, this event should be disabled as it is frequently occurring and may increase power consumption if HFCLK otherwise could be powered down for long durations.

This means that the RTC implements a slightly different task and event system compared to the standard system described in *Figure 9: Tasks, events, shortcuts, and interrupts* on page 66. The RTC task and event system is illustrated in *Figure 45: Tasks, events and interrupts in the RTC* on page 240.

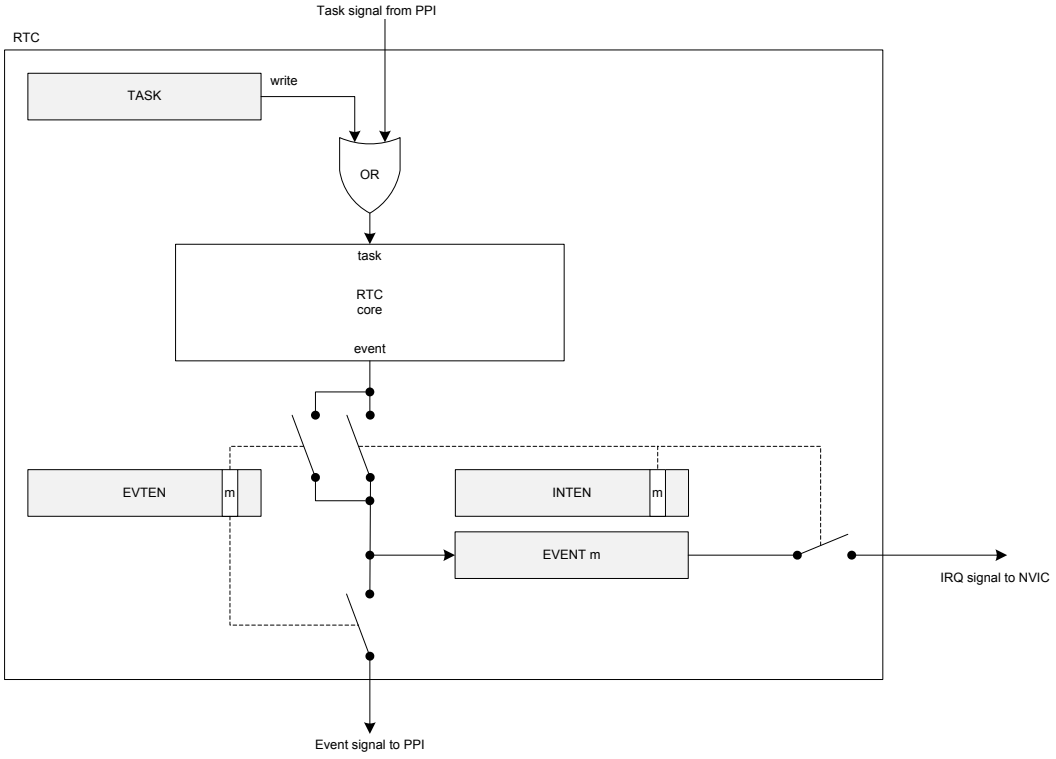

Figure 45: Tasks, events and interrupts in the RTC

25.7 Compare feature

There are a number of Compare registers.

For more information, see table *Instances*.

When setting a compare register, the following behavior of the RTC compare event should be noted:

- If a CC register value is 0 when a CLEAR task is set, this will not trigger a COMPARE event.

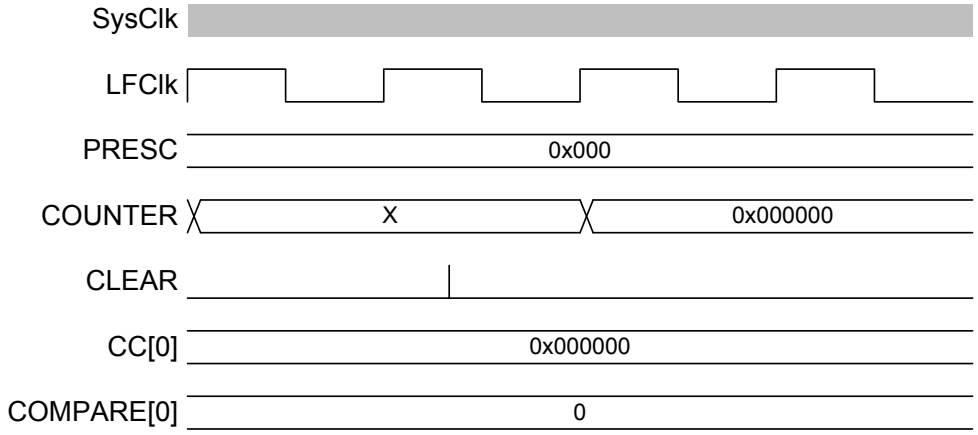

Figure 46: Timing diagram - COMPARE_CLEAR

- If a CC register is N and the COUNTER value is N when the START task is set, this will not trigger a COMPARE event.

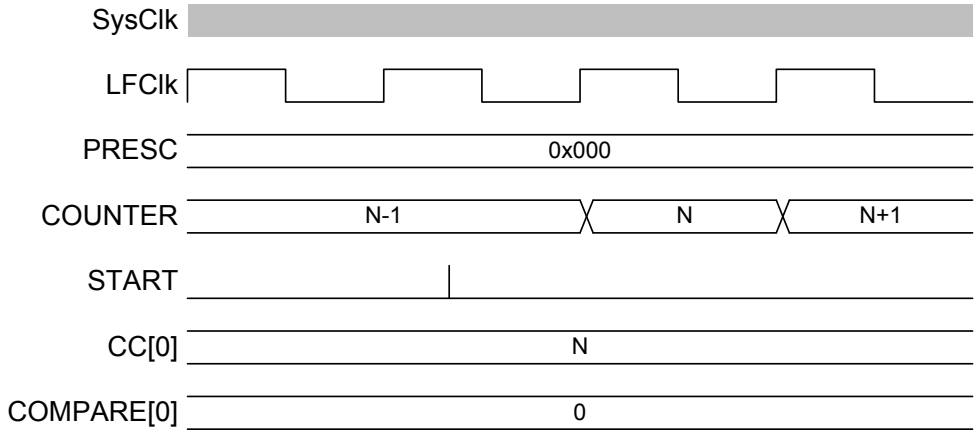

Figure 47: Timing diagram - COMPARE_START

- COMPARE occurs when a CC register is N and the COUNTER value transitions from N-1 to N.

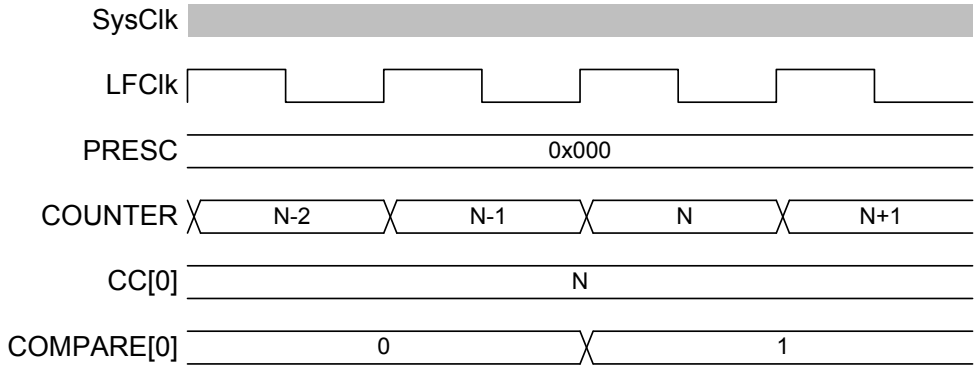

Figure 48: Timing diagram - COMPARE

- If the COUNTER is N, writing N+2 to a CC register is guaranteed to trigger a COMPARE event at N+2.

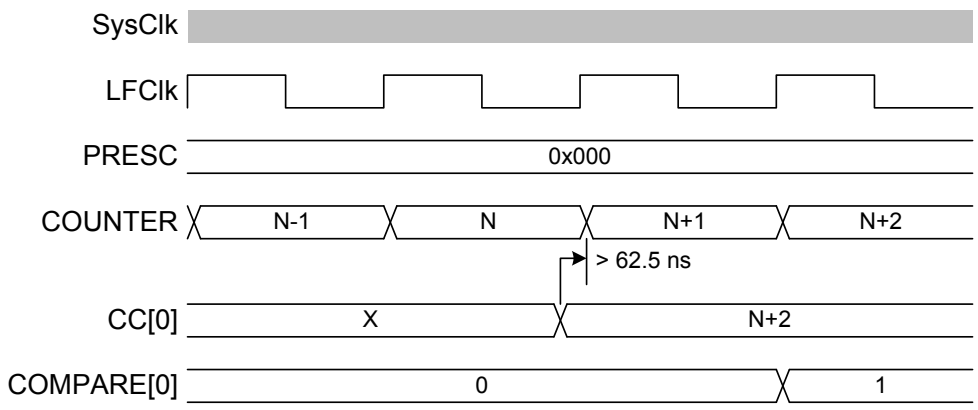

Figure 49: Timing diagram - COMPARE_N+2

- If the COUNTER is N, writing N or N+1 to a CC register may not trigger a COMPARE event.

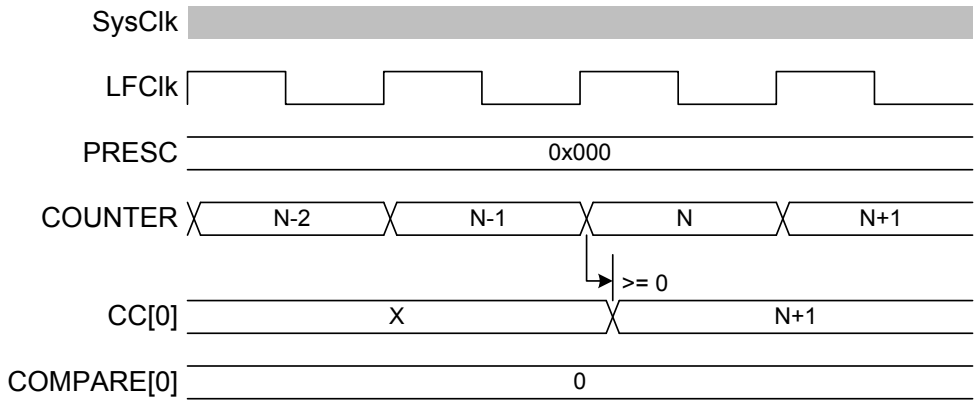

Figure 50: Timing diagram - COMPARE_N+1

- If the COUNTER is N and the current CC register value is N+1 or N+2 when a new CC value is written, a match may trigger on the previous CC value before the new value takes effect. If the current CC value greater than N+2 when the new value is written, there will be no event due to the old value.

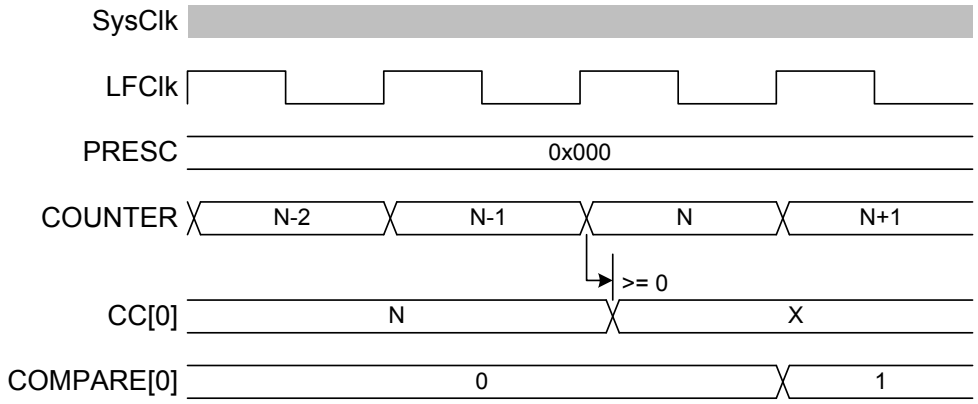

Figure 51: Timing diagram - COMPARE_N-1

25.8 TASK and EVENT jitter/delay

Jitter or delay in the RTC is due to the peripheral clock being a low frequency clock (LFCLK) which is not synchronous to the faster PCLK16M.

Registers in the peripheral interface, part of the PCLK16M domain, have a set of mirrored registers in the LFCLK domain. For example, the COUNTER value accessible from the CPU is in the PCLK16M domain and is latched on read from an internal register called COUNTER in the LFCLK domain. COUNTER is the register which is actually modified each time the RTC ticks. These registers must be synchronised between clock domains (PCLK16M and LFCLK).

The following is a summary of the jitter introduced on tasks and events. Figures illustrating jitter follow.

Table 41: RTC jitter magnitudes on tasks

Task	Delay
CLEAR, STOP, START, TRIGOVRFLOW	+15 to 46 µs

Table 42: RTC jitter magnitudes on events

Operation/Function	Jitter
START to COUNTER increment	+/- 15 µs
COMPARE to COMPARE [21]	+/- 62.5 ns

1. CLEAR and STOP (and TRIGOVRFLW; not shown) will be delayed as long as it takes for the peripheral to clock a falling edge and rising of the LFCLK. This is between 15.2585 µs and 45.7755 µs – rounded to 15 µs and 46 µs for the remainder of the section.

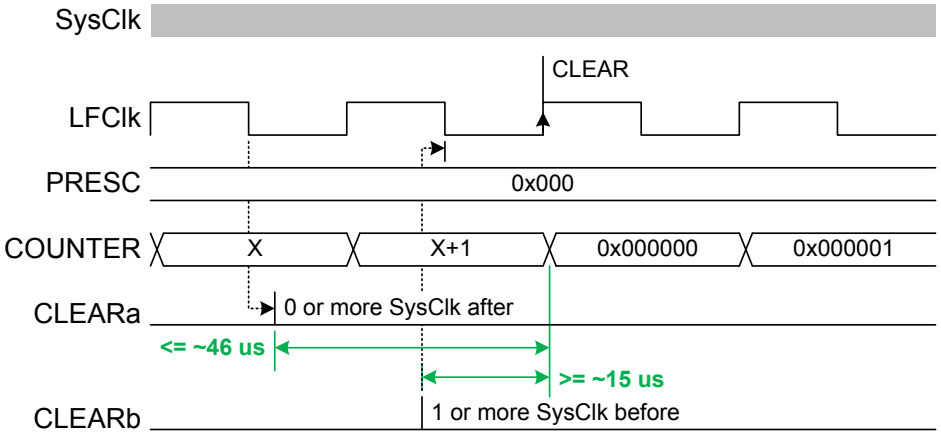

Figure 52: Timing diagram - DELAY_CLEAR

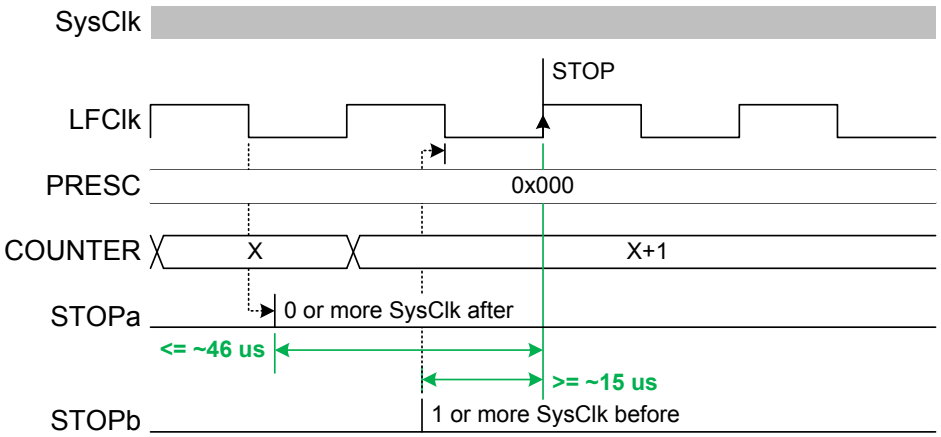

Figure 53: Timing diagram - DELAY_STOP

2. The START task will start the RTC. Assuming that the LFCLK was previously running and stable, the first increment of COUNTER (and instance of TICK event) will be typically after 30.5 µs +/-15 µs. In some cases, in particular if the RTC is STARTed before the LFCLK is running, that timing can be up to ~250 µs. The software should therefore wait for the first TICK if it has to make sure the RTC is running. Sending a TRIGOVRFLW task sets the COUNTER to a value close to overflow. However, since the update of COUNTER relies on a stable LFCLK, sending this task while LFCLK is not running will start LFCLK, but the update will then be delayed by the same amount of time of up to ~250 us. The figures show the smallest and largest delays to on the START task which appears as a +/-15 µs jitter on the first COUNTER increment.

[21] Assumes RTC runs continuously between these events.

Note: 32.768 kHz clock jitter is additional to the numbers provided above.

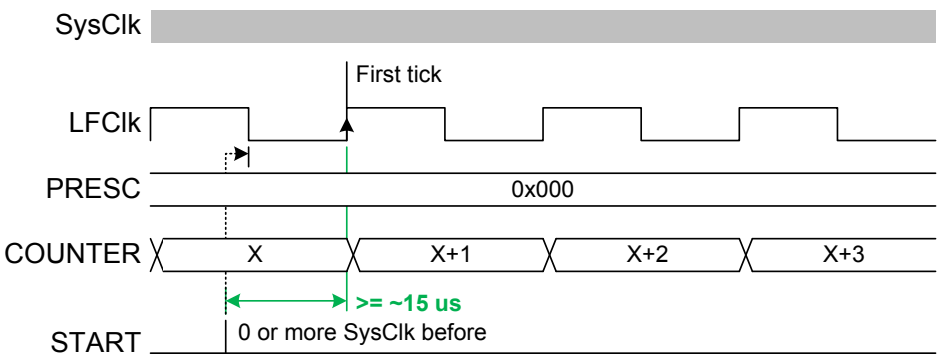

Figure 54: Timing diagram - JITTER_START-

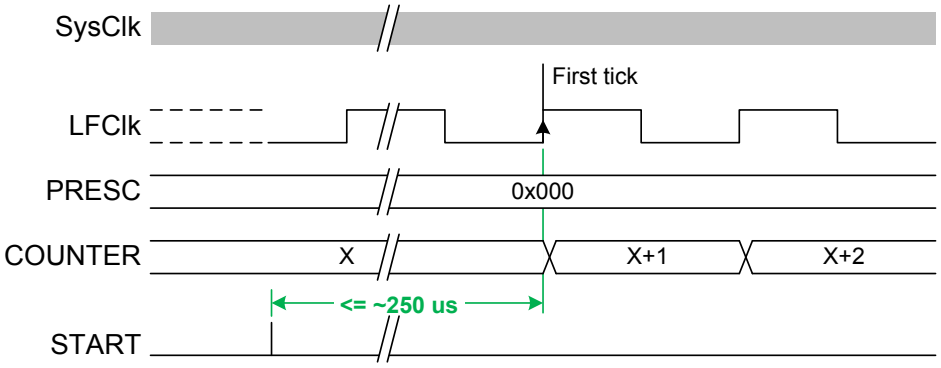

Figure 55: Timing diagram - JITTER_START+

25.9 Reading the COUNTER register

To read the COUNTER register, the internal <<COUNTER>> value is sampled.

To ensure that the <<COUNTER>> is safely sampled (considering an LFCLK transition may occur during a read), the CPU and core memory bus are halted for three cycles by lowering the core PREADY signal. The Read takes the CPU 2 cycles in addition resulting in the COUNTER register read taking a fixed five PCLK16M clock cycles.

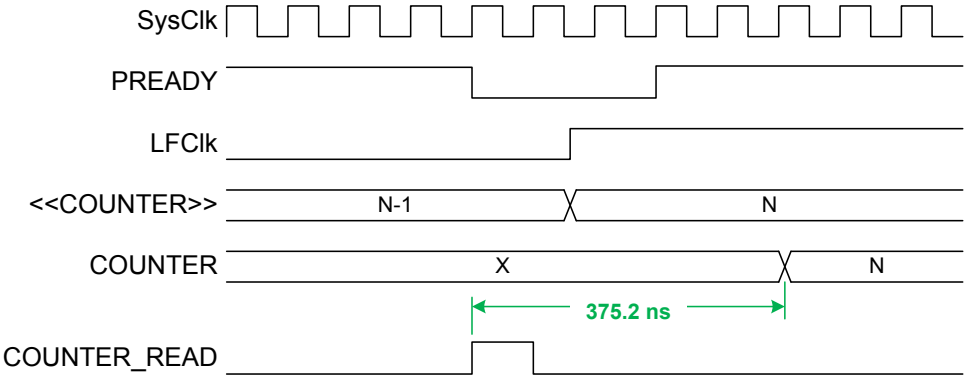

Figure 56: Timing diagram - COUNTER_READ

25.10 Registers

Table 43: Instances

Base address	Peripheral	Instance	Description	Configuration
0x4000B000	RTC	RTC0	Real-time counter 0	CC[0..2] implemented, CC[3] not implemented

Base address	Peripheral	Instance	Description	Configuration
0x40011000	RTC	RTC1	Real-time counter 1	CC[0..3] implemented
0x40024000	RTC	RTC2	Real-time counter 2.	CC[0..3] implemented

Table 44: Register Overview

Register	Offset	Description
TASKS_START	0x000	Start RTC COUNTER
TASKS_STOP	0x004	Stop RTC COUNTER
TASKS_CLEAR	0x008	Clear RTC COUNTER
TASKS_TRIGOVRFLW	0x00C	Set COUNTER to 0xFFFFF0
EVENTS_TICK	0x100	Event on COUNTER increment
EVENTS_OVRFLW	0x104	Event on COUNTER overflow
EVENTS_COMPARE[0]	0x140	Compare event on CC[0] match
EVENTS_COMPARE[1]	0x144	Compare event on CC[1] match
EVENTS_COMPARE[2]	0x148	Compare event on CC[2] match
EVENTS_COMPARE[3]	0x14C	Compare event on CC[3] match
INTENSET	0x304	Enable interrupt
INTENCLR	0x308	Disable interrupt
EVTEN	0x340	Enable or disable event routing
EVTENSET	0x344	Enable event routing
EVTENCLR	0x348	Disable event routing
COUNTER	0x504	Current COUNTER value
PRESCALER	0x508	12 bit prescaler for COUNTER frequency (32768/(PRESCALER+1)).Must be written when RTC is stopped
CC[0]	0x540	Compare register 0
CC[1]	0x544	Compare register 1
CC[2]	0x548	Compare register 2
CC[3]	0x54C	Compare register 3

25.10.1 INTENSET

Address offset: 0x304

Enable interrupt

Bit number				31	30	29	28	27	26	25	24	23	22	21	20	19	18	17	16	15	14	13	12	11	10	9	8	7	6	5	4	3	2	1	0
Id																F	E	D	C															B	A
Reset 0x00000000				**0**	**0**	**0**	**0**	**0**	**0**	**0**	**0**	**0**	**0**	**0**	**0**	**0**	**0**	**0**	**0**	**0**	**0**	**0**	**0**	**0**	**0**	**0**	**0**	**0**	**0**	**0**	**0**	**0**	**0**	**0**	**0**
Id	**RW**	**Field**	**Value Id**	**Value**																															
A	RW	TICK																																	
			Set	1																															
			Disabled	0																															
			Enabled	1																															
B	RW	OVRFLW																																	
			Set	1																															
			Disabled	0																															
			Enabled	1																															
C	RW	COMPARE0																																	
			Set	1																															
			Disabled	0																															
			Enabled	1																															
D	RW	COMPARE1																																	
			Set	1																															
			Disabled	0																															

Bit number				31	30	29	28	27	26	25	24	23	22	21	20	19	18	17	16	15	14	13	12	11	10	9	8	7	6	5	4	3	2	1	0
Id																F	E	D	C															B	A
Reset 0x00000000				**0**	**0**	**0**	**0**	**0**	**0**	**0**	**0**	**0**	**0**	**0**	**0**	**0**	**0**	**0**	**0**	**0**	**0**	**0**	**0**	**0**	**0**	**0**	**0**	**0**	**0**	**0**	**0**	**0**	**0**	**0**	**0**
Id	**RW**	**Field**	**Value Id**	**Value**												**Description**																					
			Enabled	1												Read: Enabled																			
E	RW	COMPARE2														Write '1' to Enable interrupt for COMPARE[2] event See *EVENTS_COMPARE[2]*																			
			Set	1												Enable																			
			Disabled	0												Read: Disabled																			
			Enabled	1												Read: Enabled																			
F	RW	COMPARE3														Write '1' to Enable interrupt for COMPARE[3] event See *EVENTS_COMPARE[3]*																			
			Set	1												Enable																			
			Disabled	0												Read: Disabled																			
			Enabled	1												Read: Enabled																			

25.10.2 INTENCLR

Address offset: 0x308

Disable interrupt

Bit number				31	30	29	28	27	26	25	24	23	22	21	20	19	18	17	16	15	14	13	12	11	10	9	8	7	6	5	4	3	2	1	0
Id																F	E	D	C															B	A
Reset 0x00000000				**0**	**0**	**0**	**0**	**0**	**0**	**0**	**0**	**0**	**0**	**0**	**0**	**0**	**0**	**0**	**0**	**0**	**0**	**0**	**0**	**0**	**0**	**0**	**0**	**0**	**0**	**0**	**0**	**0**	**0**	**0**	**0**
Id	**RW**	**Field**	**Value Id**	**Value**												**Description**																					
A	RW	TICK														Write '1' to Disable interrupt for TICK event See *EVENTS_TICK*																			
			Clear	1												Disable																			
			Disabled	0												Read: Disabled																			
			Enabled	1												Read: Enabled																			
B	RW	OVRFLW														Write '1' to Disable interrupt for OVRFLW event See *EVENTS_OVRFLW*																			
			Clear	1												Disable																			
			Disabled	0												Read: Disabled																			
			Enabled	1												Read: Enabled																			
C	RW	COMPARE0														Write '1' to Disable interrupt for COMPARE[0] event See *EVENTS_COMPARE[0]*																			
			Clear	1												Disable																			
			Disabled	0												Read: Disabled																			
			Enabled	1												Read: Enabled																			
D	RW	COMPARE1														Write '1' to Disable interrupt for COMPARE[1] event See *EVENTS_COMPARE[1]*																			
			Clear	1												Disable																			
			Disabled	0												Read: Disabled																			
			Enabled	1												Read: Enabled																			
E	RW	COMPARE2														Write '1' to Disable interrupt for COMPARE[2] event See *EVENTS_COMPARE[2]*																			
			Clear	1												Disable																			
			Disabled	0												Read: Disabled																			
			Enabled	1												Read: Enabled																			
F	RW	COMPARE3														Write '1' to Disable interrupt for COMPARE[3] event See *EVENTS_COMPARE[3]*																			
			Clear	1												Disable																			
			Disabled	0												Read: Disabled																			
			Enabled	1												Read: Enabled																			

25.10.3 EVTEN

Address offset: 0x340

Enable or disable event routing

Bit number	31	30	29	28	27	26	25	24	23	22	21	20	19	18	17	16	15	14	13	12	11	10	9	8	7	6	5	4	3	2	1	0
Id													F	E	D	C															B	A
Reset 0x00000000	**0**	**0**	**0**	**0**	**0**	**0**	**0**	**0**	**0**	**0**	**0**	**0**	**0**	**0**	**0**	**0**	**0**	**0**	**0**	**0**	**0**	**0**	**0**	**0**	**0**	**0**	**0**	**0**	**0**	**0**	**0**	**0**

Id	RW	Field	Value Id	Value	Description
A	RW	TICK			Enable or disable event routing for TICK event See *EVENTS_TICK*
			Disabled	0	Disable
			Enabled	1	Enable
B	RW	OVRFLW			Enable or disable event routing for OVRFLW event See *EVENTS_OVRFLW*
			Disabled	0	Disable
			Enabled	1	Enable
C	RW	COMPARE0			Enable or disable event routing for COMPARE[0] event See *EVENTS_COMPARE[0]*
			Disabled	0	Disable
			Enabled	1	Enable
D	RW	COMPARE1			Enable or disable event routing for COMPARE[1] event See *EVENTS_COMPARE[1]*
			Disabled	0	Disable
			Enabled	1	Enable
E	RW	COMPARE2			Enable or disable event routing for COMPARE[2] event See *EVENTS_COMPARE[2]*
			Disabled	0	Disable
			Enabled	1	Enable
F	RW	COMPARE3			Enable or disable event routing for COMPARE[3] event See *EVENTS_COMPARE[3]*
			Disabled	0	Disable
			Enabled	1	Enable

25.10.4 EVTENSET

Address offset: 0x344

Enable event routing

Bit number	31	30	29	28	27	26	25	24	23	22	21	20	19	18	17	16	15	14	13	12	11	10	9	8	7	6	5	4	3	2	1	0
Id													F	E	D	C															B	A
Reset 0x00000000	**0**	**0**	**0**	**0**	**0**	**0**	**0**	**0**	**0**	**0**	**0**	**0**	**0**	**0**	**0**	**0**	**0**	**0**	**0**	**0**	**0**	**0**	**0**	**0**	**0**	**0**	**0**	**0**	**0**	**0**	**0**	**0**

Id	RW	Field	Value Id	Value	Description
A	RW	TICK			Write '1' to Enable event routing for TICK event See *EVENTS_TICK*
			Set	1	Enable
			Disabled	0	Read: Disabled
			Enabled	1	Read: Enabled
B	RW	OVRFLW			Write '1' to Enable event routing for OVRFLW event See *EVENTS_OVRFLW*
			Set	1	Enable
			Disabled	0	Read: Disabled
			Enabled	1	Read: Enabled
C	RW	COMPARE0			Write '1' to Enable event routing for COMPARE[0] event See *EVENTS_COMPARE[0]*
			Set	1	Enable

Bit number				31	30	29	28	27	26	25	24	23	22	21	20	19	18	17	16	15	14	13	12	11	10	9	8	7	6	5	4	3	2	1	0
Id																F	E	D	C															B	A
Reset 0x00000000				**0**	**0**	**0**	**0**	**0**	**0**	**0**	**0**	**0**	**0**	**0**	**0**	**0**	**0**	**0**	**0**	**0**	**0**	**0**	**0**	**0**	**0**	**0**	**0**	**0**	**0**	**0**	**0**	**0**	**0**	**0**	**0**
Id	**RW**	**Field**	**Value Id**	**Value**												**Description**																					
			Disabled	0												Read: Disabled																			
			Enabled	1												Read: Enabled																			
D	RW	COMPARE1														Write '1' to Enable event routing for COMPARE[1] event See *EVENTS_COMPARE[1]*																			
			Set	1												Enable																			
			Disabled	0												Read: Disabled																			
			Enabled	1												Read: Enabled																			
E	RW	COMPARE2														Write '1' to Enable event routing for COMPARE[2] event See *EVENTS_COMPARE[2]*																			
			Set	1												Enable																			
			Disabled	0												Read: Disabled																			
			Enabled	1												Read: Enabled																			
F	RW	COMPARE3														Write '1' to Enable event routing for COMPARE[3] event See *EVENTS_COMPARE[3]*																			
			Set	1												Enable																			
			Disabled	0												Read: Disabled																			
			Enabled	1												Read: Enabled																			

25.10.5 EVTENCLR

Address offset: 0x348

Disable event routing

Bit number				31	30	29	28	27	26	25	24	23	22	21	20	19	18	17	16	15	14	13	12	11	10	9	8	7	6	5	4	3	2	1	0
Id																F	E	D	C															B	A
Reset 0x00000000				**0**	**0**	**0**	**0**	**0**	**0**	**0**	**0**	**0**	**0**	**0**	**0**	**0**	**0**	**0**	**0**	**0**	**0**	**0**	**0**	**0**	**0**	**0**	**0**	**0**	**0**	**0**	**0**	**0**	**0**	**0**	**0**
Id	**RW**	**Field**	**Value Id**	**Value**												**Description**																					
A	RW	TICK														Write '1' to Disable event routing for TICK event See *EVENTS_TICK*																			
			Clear	1												Disable																			
			Disabled	0												Read: Disabled																			
			Enabled	1												Read: Enabled																			
B	RW	OVRFLW														Write '1' to Disable event routing for OVRFLW event See *EVENTS_OVRFLW*																			
			Clear	1												Disable																			
			Disabled	0												Read: Disabled																			
			Enabled	1												Read: Enabled																			
C	RW	COMPARE0														Write '1' to Disable event routing for COMPARE[0] event See *EVENTS_COMPARE[0]*																			
			Clear	1												Disable																			
			Disabled	0												Read: Disabled																			
			Enabled	1												Read: Enabled																			
D	RW	COMPARE1														Write '1' to Disable event routing for COMPARE[1] event See *EVENTS_COMPARE[1]*																			
			Clear	1												Disable																			
			Disabled	0												Read: Disabled																			
			Enabled	1												Read: Enabled																			
E	RW	COMPARE2														Write '1' to Disable event routing for COMPARE[2] event See *EVENTS_COMPARE[2]*																			
			Clear	1												Disable																			
			Disabled	0												Read: Disabled																			
			Enabled	1												Read: Enabled																			

Bit number				31	30	29	28	27	26	25	24	23	22	21	20	19	18	17	16	15	14	13	12	11	10	9	8	7	6	5	4	3	2	1	0
Id																F	E	D	C															B	A
Reset 0x00000000				**0**	**0**	**0**	**0**	**0**	**0**	**0**	**0**	**0**	**0**	**0**	**0**	**0**	**0**	**0**	**0**	**0**	**0**	**0**	**0**	**0**	**0**	**0**	**0**	**0**	**0**	**0**	**0**	**0**	**0**	**0**	**0**
Id	**RW**	**Field**	**Value Id**	**Value**								**Description**																							
F	RW	COMPARE3										Write '1' to Disable event routing for COMPARE[3] event See *EVENTS_COMPARE[3]*																							
			Clear	1								Disable																							
			Disabled	0								Read: Disabled																							
			Enabled	1								Read: Enabled																							

25.10.6 COUNTER

Address offset: 0x504

Current COUNTER value

Bit number				31	30	29	28	27	26	25	24	23	22	21	20	19	18	17	16	15	14	13	12	11	10	9	8	7	6	5	4	3	2	1	0
Id												A	A	A	A	A	A	A	A	A	A	A	A	A	A	A	A	A	A	A	A	A	A	A	A
Reset 0x00000000				**0**	**0**	**0**	**0**	**0**	**0**	**0**	**0**	**0**	**0**	**0**	**0**	**0**	**0**	**0**	**0**	**0**	**0**	**0**	**0**	**0**	**0**	**0**	**0**	**0**	**0**	**0**	**0**	**0**	**0**	**0**	**0**
Id	**RW**	**Field**	**Value Id**	**Value**								**Description**																							
A	R	COUNTER										Counter value																							

25.10.7 PRESCALER

Address offset: 0x508

12 bit prescaler for COUNTER frequency (32768/(PRESCALER+1)).Must be written when RTC is stopped

Bit number				31	30	29	28	27	26	25	24	23	22	21	20	19	18	17	16	15	14	13	12	11	10	9	8	7	6	5	4	3	2	1	0
Id																								A	A	A	A	A	A	A	A	A	A	A	A
Reset 0x00000000				**0**	**0**	**0**	**0**	**0**	**0**	**0**	**0**	**0**	**0**	**0**	**0**	**0**	**0**	**0**	**0**	**0**	**0**	**0**	**0**	**0**	**0**	**0**	**0**	**0**	**0**	**0**	**0**	**0**	**0**	**0**	**0**
Id	**RW**	**Field**	**Value Id**	**Value**								**Description**																							
A	RW	PRESCALER										Prescaler value																							

25.10.8 CC[0]

Address offset: 0x540

Compare register 0

Bit number				31	30	29	28	27	26	25	24	23	22	21	20	19	18	17	16	15	14	13	12	11	10	9	8	7	6	5	4	3	2	1	0
Id												A	A	A	A	A	A	A	A	A	A	A	A	A	A	A	A	A	A	A	A	A	A	A	A
Reset 0x00000000				**0**	**0**	**0**	**0**	**0**	**0**	**0**	**0**	**0**	**0**	**0**	**0**	**0**	**0**	**0**	**0**	**0**	**0**	**0**	**0**	**0**	**0**	**0**	**0**	**0**	**0**	**0**	**0**	**0**	**0**	**0**	**0**
Id	**RW**	**Field**	**Value Id**	**Value**								**Description**																							
A	RW	COMPARE										Compare value																							

25.10.9 CC[1]

Address offset: 0x544

Compare register 1

Bit number				31	30	29	28	27	26	25	24	23	22	21	20	19	18	17	16	15	14	13	12	11	10	9	8	7	6	5	4	3	2	1	0
Id												A	A	A	A	A	A	A	A	A	A	A	A	A	A	A	A	A	A	A	A	A	A	A	A
Reset 0x00000000				**0**	**0**	**0**	**0**	**0**	**0**	**0**	**0**	**0**	**0**	**0**	**0**	**0**	**0**	**0**	**0**	**0**	**0**	**0**	**0**	**0**	**0**	**0**	**0**	**0**	**0**	**0**	**0**	**0**	**0**	**0**	**0**
Id	**RW**	**Field**	**Value Id**	**Value**								**Description**																							
A	RW	COMPARE										Compare value																							

25.10.10 CC[2]

Address offset: 0x548

Compare register 2

Bit number	31	30	29	28	27	26	25	24	23	22	21	20	19	18	17	16	15	14	13	12	11	10	9	8	7	6	5	4	3	2	1	0
Id									A	A	A	A	A	A	A	A	A	A	A	A	A	A	A	A	A	A	A	A	A	A	A	A
Reset 0x00000000	**0**	**0**	**0**	**0**	**0**	**0**	**0**	**0**	**0**	**0**	**0**	**0**	**0**	**0**	**0**	**0**	**0**	**0**	**0**	**0**	**0**	**0**	**0**	**0**	**0**	**0**	**0**	**0**	**0**	**0**	**0**	**0**

Id	RW	Field	Value Id	Value	Description
A	RW	COMPARE			Compare value

25.10.11 CC[3]

Address offset: 0x54C

Compare register 3

Bit number	31	30	29	28	27	26	25	24	23	22	21	20	19	18	17	16	15	14	13	12	11	10	9	8	7	6	5	4	3	2	1	0
Id									A	A	A	A	A	A	A	A	A	A	A	A	A	A	A	A	A	A	A	A	A	A	A	A
Reset 0x00000000	**0**	**0**	**0**	**0**	**0**	**0**	**0**	**0**	**0**	**0**	**0**	**0**	**0**	**0**	**0**	**0**	**0**	**0**	**0**	**0**	**0**	**0**	**0**	**0**	**0**	**0**	**0**	**0**	**0**	**0**	**0**	**0**

Id	RW	Field	Value Id	Value	Description
A	RW	COMPARE			Compare value

25.11 Electrical Specification

25.11.1 RTC Electrical Specification

Symbol	Description	Min.	Typ.	Max.	Units
I_{RTC}	Run current Real Time Counter (LFCLK source)		0.1		µA

26 RNG — Random number generator

The Random number generator (RNG) generates true non-deterministic random numbers based on internal thermal noise that are suitable for cryptographic purposes. The RNG does not require a seed value.

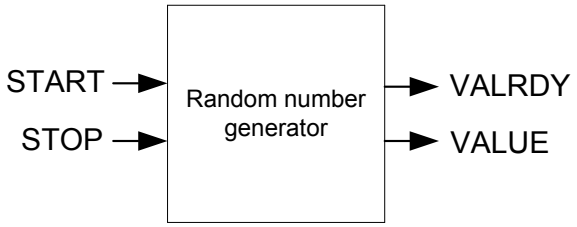

Figure 57: Random number generator

The RNG is started by triggering the START task and stopped by triggering the STOP task. When started, new random numbers are generated continuously and written to the VALUE register when ready. A VALRDY event is generated for every new random number that is written to the VALUE register. This means that after a VALRDY event is generated the CPU has the time until the next VALRDY event to read out the random number from the VALUE register before it is overwritten by a new random number.

26.1 Bias correction

A bias correction algorithm is employed on the internal bit stream to remove any bias toward '1' or '0'. The bits are then queued into an eight-bit register for parallel readout from the VALUE register.

It is possible to enable bias correction in the CONFIG register. This will result in slower value generation, but will ensure a statistically uniform distribution of the random values.

26.2 Speed

The time needed to generate one random byte of data is unpredictable, and may vary from one byte to the next. This is especially true when bias correction is enabled.

26.3 Registers

Table 45: Instances

Base address	Peripheral	Instance	Description	Configuration
0x4000D000	RNG	RNG	Random Number Generator	

Table 46: Register Overview

Register	Offset	Description
TASKS_START	0x000	Task starting the random number generator
TASKS_STOP	0x004	Task stopping the random number generator
EVENTS_VALRDY	0x100	Event being generated for every new random number written to the VALUE register
SHORTS	0x200	Shortcut register
INTENSET	0x304	Enable interrupt
INTENCLR	0x308	Disable interrupt
CONFIG	0x504	Configuration register
VALUE	0x508	Output random number

26.3.1 SHORTS

Address offset: 0x200

Shortcut register

Bit number				31	30	29	28	27	26	25	24	23	22	21	20	19	18	17	16	15	14	13	12	11	10	9	8	7	6	5	4	3	2	1	0
Id																																			A
Reset 0x00000000				**0**	**0**	**0**	**0**	**0**	**0**	**0**	**0**	**0**	**0**	**0**	**0**	**0**	**0**	**0**	**0**	**0**	**0**	**0**	**0**	**0**	**0**	**0**	**0**	**0**	**0**	**0**	**0**	**0**	**0**	**0**	**0**
Id	**RW**	**Field**	**Value Id**	**Value**																															**Description**
A	RW	VALRDY_STOP																																	Shortcut between VALRDY event and STOP task
																																			See *EVENTS_VALRDY* and *TASKS_STOP*
			Disabled	0																															Disable shortcut
			Enabled	1																															Enable shortcut

26.3.2 INTENSET

Address offset: 0x304

Enable interrupt

Bit number				31	30	29	28	27	26	25	24	23	22	21	20	19	18	17	16	15	14	13	12	11	10	9	8	7	6	5	4	3	2	1	0
Id																																			A
Reset 0x00000000				**0**	**0**	**0**	**0**	**0**	**0**	**0**	**0**	**0**	**0**	**0**	**0**	**0**	**0**	**0**	**0**	**0**	**0**	**0**	**0**	**0**	**0**	**0**	**0**	**0**	**0**	**0**	**0**	**0**	**0**	**0**	**0**
Id	**RW**	**Field**	**Value Id**	**Value**																															**Description**
A	RW	VALRDY																																	Write '1' to Enable interrupt for VALRDY event
																																			See *EVENTS_VALRDY*
			Set	1																															Enable
			Disabled	0																															Read: Disabled
			Enabled	1																															Read: Enabled

26.3.3 INTENCLR

Address offset: 0x308

Disable interrupt

Bit number				31	30	29	28	27	26	25	24	23	22	21	20	19	18	17	16	15	14	13	12	11	10	9	8	7	6	5	4	3	2	1	0
Id																																			A
Reset 0x00000000				**0**	**0**	**0**	**0**	**0**	**0**	**0**	**0**	**0**	**0**	**0**	**0**	**0**	**0**	**0**	**0**	**0**	**0**	**0**	**0**	**0**	**0**	**0**	**0**	**0**	**0**	**0**	**0**	**0**	**0**	**0**	**0**
Id	**RW**	**Field**	**Value Id**	**Value**																															**Description**
A	RW	VALRDY																																	Write '1' to Disable interrupt for VALRDY event
																																			See *EVENTS_VALRDY*
			Clear	1																															Disable
			Disabled	0																															Read: Disabled
			Enabled	1																															Read: Enabled

26.3.4 CONFIG

Address offset: 0x504

Configuration register

Bit number				31	30	29	28	27	26	25	24	23	22	21	20	19	18	17	16	15	14	13	12	11	10	9	8	7	6	5	4	3	2	1	0
Id																																			A
Reset 0x00000000				**0**	**0**	**0**	**0**	**0**	**0**	**0**	**0**	**0**	**0**	**0**	**0**	**0**	**0**	**0**	**0**	**0**	**0**	**0**	**0**	**0**	**0**	**0**	**0**	**0**	**0**	**0**	**0**	**0**	**0**	**0**	**0**
Id	**RW**	**Field**	**Value Id**	**Value**																															**Description**
A	RW	DERCEN																																	Bias correction
			Disabled	0																															Disabled
			Enabled	1																															Enabled

26.3.5 VALUE

Address offset: 0x508

Output random number

Bit number	31	30	29	28	27	26	25	24	23	22	21	20	19	18	17	16	15	14	13	12	11	10	9	8	7	6	5	4	3	2	1	0
Id																									A	A	A	A	A	A	A	A
Reset 0x00000000	**0**	**0**	**0**	**0**	**0**	**0**	**0**	**0**	**0**	**0**	**0**	**0**	**0**	**0**	**0**	**0**	**0**	**0**	**0**	**0**	**0**	**0**	**0**	**0**	**0**	**0**	**0**	**0**	**0**	**0**	**0**	**0**

Id	RW	Field	Value Id	Value	Description
A	R	VALUE		[0..255]	Generated random number

26.4 Electrical Specification

26.4.1 RNG Electrical Specification

Symbol	Description	Min.	Typ.	Max.	Units
I_{RNG}	Run current, CPU sleeping.		500		µA
$t_{RNG,START}$	Time from setting the START task to generation begins. This is a one-time delay on START signal and does not apply between samples.		128		µs
$t_{RNG,RAW}$	Run time per byte without bias correction. Uniform distribution of 0 and 1 is not guaranteed.		30		µs
$t_{RNG,BC}$	Run time per byte with bias correction. Uniform distribution of 0 and 1 is guaranteed. Time to generate a byte cannot be guaranteed.		120		µs

27 TEMP — Temperature sensor

The temperature sensor measures die temperature over the temperature range of the device. Linearity compensation can be implemented if required by the application.

Listed here are the main features for TEMP:

- Temperature range is greater than or equal to operating temperature of the device
- Resolution is 0.25 degrees

TEMP is started by triggering the START task.

When the temperature measurement is completed, a DATARDY event will be generated and the result of the measurement can be read from the TEMP register.

To achieve the measurement accuracy stated in the electrical specification, the crystal oscillator must be selected as the HFCLK source, see *CLOCK — Clock control* on page 98 for more information.

When the temperature measurement is completed, TEMP analog electronics power down to save power.

TEMP only supports one-shot operation, meaning that every TEMP measurement has to be explicitly started using the START task.

27.1 Registers

Table 47: Instances

Base address	Peripheral	Instance	Description	Configuration
0x4000C000	TEMP	TEMP	Temperature Sensor	

Table 48: Register Overview

Register	Offset	Description
TASKS_START	0x000	Start temperature measurement
TASKS_STOP	0x004	Stop temperature measurement
EVENTS_DATARDY	0x100	Temperature measurement complete, data ready
INTENSET	0x304	Enable interrupt
INTENCLR	0x308	Disable interrupt
TEMP	0x508	Temperature in °C (0.25° steps)
A0	0x520	Slope of 1st piece wise linear function
A1	0x524	Slope of 2nd piece wise linear function
A2	0x528	Slope of 3rd piece wise linear function
A3	0x52C	Slope of 4th piece wise linear function
A4	0x530	Slope of 5th piece wise linear function
A5	0x534	Slope of 6th piece wise linear function
B0	0x540	y-intercept of 1st piece wise linear function
B1	0x544	y-intercept of 2nd piece wise linear function
B2	0x548	y-intercept of 3rd piece wise linear function
B3	0x54C	y-intercept of 4th piece wise linear function
B4	0x550	y-intercept of 5th piece wise linear function
B5	0x554	y-intercept of 6th piece wise linear function
T0	0x560	End point of 1st piece wise linear function
T1	0x564	End point of 2nd piece wise linear function
T2	0x568	End point of 3rd piece wise linear function
T3	0x56C	End point of 4th piece wise linear function
T4	0x570	End point of 5th piece wise linear function

27.1.1 INTENSET

Address offset: 0x304

Enable interrupt

Bit number	31	30	29	28	27	26	25	24	23	22	21	20	19	18	17	16	15	14	13	12	11	10	9	8	7	6	5	4	3	2	1	0
Id																																A
Reset 0x00000000	**0**	**0**	**0**	**0**	**0**	**0**	**0**	**0**	**0**	**0**	**0**	**0**	**0**	**0**	**0**	**0**	**0**	**0**	**0**	**0**	**0**	**0**	**0**	**0**	**0**	**0**	**0**	**0**	**0**	**0**	**0**	**0**

Id	RW	Field	Value Id	Value	Description
A	RW	DATARDY			Write '1' to Enable interrupt for DATARDY event See *EVENTS_DATARDY*
			Set	1	Enable
			Disabled	0	Read: Disabled
			Enabled	1	Read: Enabled

27.1.2 INTENCLR

Address offset: 0x308

Disable interrupt

Bit number	31	30	29	28	27	26	25	24	23	22	21	20	19	18	17	16	15	14	13	12	11	10	9	8	7	6	5	4	3	2	1	0
Id																																A
Reset 0x00000000	**0**	**0**	**0**	**0**	**0**	**0**	**0**	**0**	**0**	**0**	**0**	**0**	**0**	**0**	**0**	**0**	**0**	**0**	**0**	**0**	**0**	**0**	**0**	**0**	**0**	**0**	**0**	**0**	**0**	**0**	**0**	**0**

Id	RW	Field	Value Id	Value	Description
A	RW	DATARDY			Write '1' to Disable interrupt for DATARDY event See *EVENTS_DATARDY*
			Clear	1	Disable
			Disabled	0	Read: Disabled
			Enabled	1	Read: Enabled

27.1.3 TEMP

Address offset: 0x508

Temperature in °C (0.25° steps)

Bit number	31	30	29	28	27	26	25	24	23	22	21	20	19	18	17	16	15	14	13	12	11	10	9	8	7	6	5	4	3	2	1	0
Id	A	A	A	A	A	A	A	A	A	A	A	A	A	A	A	A	A	A	A	A	A	A	A	A	A	A	A	A	A	A	A	A
Reset 0x00000000	**0**	**0**	**0**	**0**	**0**	**0**	**0**	**0**	**0**	**0**	**0**	**0**	**0**	**0**	**0**	**0**	**0**	**0**	**0**	**0**	**0**	**0**	**0**	**0**	**0**	**0**	**0**	**0**	**0**	**0**	**0**	**0**

Id	RW	Field	Value Id	Value	Description
A	R	TEMP			Temperature in °C (0.25° steps) Result of temperature measurement. Die temperature in °C, 2's complement format, 0.25 °C steps Decision point: DATARDY

27.1.4 A0

Address offset: 0x520

Slope of 1st piece wise linear function

Bit number	31	30	29	28	27	26	25	24	23	22	21	20	19	18	17	16	15	14	13	12	11	10	9	8	7	6	5	4	3	2	1	0
Id																					A	A	A	A	A	A	A	A	A	A	A	A
Reset 0x00000320	**0**	**0**	**0**	**0**	**0**	**0**	**0**	**0**	**0**	**0**	**0**	**0**	**0**	**0**	**0**	**0**	**0**	**0**	**0**	**0**	**0**	**0**	**1**	**1**	**0**	**0**	**1**	**0**	**0**	**0**	**0**	**0**

Id	RW	Field	Value Id	Value	Description
A	RW	A0			Slope of 1st piece wise linear function

27.1.5 A1

Address offset: 0x524

Slope of 2nd piece wise linear function

Bit number	31	30	29	28	27	26	25	24	23	22	21	20	19	18	17	16	15	14	13	12	11	10	9	8	7	6	5	4	3	2	1	0
Id																					A	A	A	A	A	A	A	A	A	A	A	A
Reset 0x00000343	**0**	**0**	**0**	**0**	**0**	**0**	**0**	**0**	**0**	**0**	**0**	**0**	**0**	**0**	**0**	**0**	**0**	**0**	**0**	**0**	**0**	**0**	**1**	**1**	**0**	**1**	**0**	**0**	**0**	**0**	**1**	**1**

Id	RW	Field	Value Id	Value	Description
A	RW	A1			Slope of 2nd piece wise linear function

27.1.6 A2

Address offset: 0x528

Slope of 3rd piece wise linear function

Bit number	31	30	29	28	27	26	25	24	23	22	21	20	19	18	17	16	15	14	13	12	11	10	9	8	7	6	5	4	3	2	1	0
Id																					A	A	A	A	A	A	A	A	A	A	A	A
Reset 0x0000035D	**0**	**0**	**0**	**0**	**0**	**0**	**0**	**0**	**0**	**0**	**0**	**0**	**0**	**0**	**0**	**0**	**0**	**0**	**0**	**0**	**0**	**0**	**1**	**1**	**0**	**1**	**0**	**1**	**1**	**1**	**0**	**1**

Id	RW	Field	Value Id	Value	Description
A	RW	A2			Slope of 3rd piece wise linear function

27.1.7 A3

Address offset: 0x52C

Slope of 4th piece wise linear function

Bit number	31	30	29	28	27	26	25	24	23	22	21	20	19	18	17	16	15	14	13	12	11	10	9	8	7	6	5	4	3	2	1	0
Id																					A	A	A	A	A	A	A	A	A	A	A	A
Reset 0x00000400	**0**	**0**	**0**	**0**	**0**	**0**	**0**	**0**	**0**	**0**	**0**	**0**	**0**	**0**	**0**	**0**	**0**	**0**	**0**	**0**	**0**	**1**	**0**	**0**	**0**	**0**	**0**	**0**	**0**	**0**	**0**	**0**

Id	RW	Field	Value Id	Value	Description
A	RW	A3			Slope of 4th piece wise linear function

27.1.8 A4

Address offset: 0x530

Slope of 5th piece wise linear function

Bit number	31	30	29	28	27	26	25	24	23	22	21	20	19	18	17	16	15	14	13	12	11	10	9	8	7	6	5	4	3	2	1	0
Id																					A	A	A	A	A	A	A	A	A	A	A	A
Reset 0x0000047F	**0**	**0**	**0**	**0**	**0**	**0**	**0**	**0**	**0**	**0**	**0**	**0**	**0**	**0**	**0**	**0**	**0**	**0**	**0**	**0**	**0**	**1**	**0**	**0**	**0**	**1**	**1**	**1**	**1**	**1**	**1**	**1**

Id	RW	Field	Value Id	Value	Description
A	RW	A4			Slope of 5th piece wise linear function

27.1.9 A5

Address offset: 0x534

Slope of 6th piece wise linear function

Bit number	31	30	29	28	27	26	25	24	23	22	21	20	19	18	17	16	15	14	13	12	11	10	9	8	7	6	5	4	3	2	1	0
Id																					A	A	A	A	A	A	A	A	A	A	A	A
Reset 0x0000037B	**0**	**0**	**0**	**0**	**0**	**0**	**0**	**0**	**0**	**0**	**0**	**0**	**0**	**0**	**0**	**0**	**0**	**0**	**0**	**0**	**0**	**0**	**1**	**1**	**0**	**1**	**1**	**1**	**1**	**0**	**1**	**1**

Id	RW	Field	Value Id	Value	Description
A	RW	A5			Slope of 6th piece wise linear function

27.1.10 B0

Address offset: 0x540

y-intercept of 1st piece wise linear function

Bit number	31	30	29	28	27	26	25	24	23	22	21	20	19	18	17	16	15	14	13	12	11	10	9	8	7	6	5	4	3	2	1	0
Id																			A	A	A	A	A	A	A	A	A	A	A	A	A	A
Reset 0x00003FCC	**0**	**0**	**0**	**0**	**0**	**0**	**0**	**0**	**0**	**0**	**0**	**0**	**0**	**0**	**0**	**0**	**0**	**0**	**1**	**1**	**1**	**1**	**1**	**1**	**1**	**1**	**0**	**0**	**1**	**1**	**0**	**0**

Id	RW	Field	Value Id	Value	Description
A	RW	B0			y-intercept of 1st piece wise linear function

27.1.11 B1

Address offset: 0x544

y-intercept of 2nd piece wise linear function

Bit number	31	30	29	28	27	26	25	24	23	22	21	20	19	18	17	16	15	14	13	12	11	10	9	8	7	6	5	4	3	2	1	0
Id																			A	A	A	A	A	A	A	A	A	A	A	A	A	A
Reset 0x00003F98	**0**	**0**	**0**	**0**	**0**	**0**	**0**	**0**	**0**	**0**	**0**	**0**	**0**	**0**	**0**	**0**	**0**	**0**	**1**	**1**	**1**	**1**	**1**	**1**	**1**	**0**	**0**	**1**	**1**	**0**	**0**	**0**

Id	RW	Field	Value Id	Value	Description
A	RW	B1			y-intercept of 2nd piece wise linear function

27.1.12 B2

Address offset: 0x548

y-intercept of 3rd piece wise linear function

Bit number	31	30	29	28	27	26	25	24	23	22	21	20	19	18	17	16	15	14	13	12	11	10	9	8	7	6	5	4	3	2	1	0
Id																			A	A	A	A	A	A	A	A	A	A	A	A	A	A
Reset 0x00003F98	**0**	**0**	**0**	**0**	**0**	**0**	**0**	**0**	**0**	**0**	**0**	**0**	**0**	**0**	**0**	**0**	**0**	**0**	**1**	**1**	**1**	**1**	**1**	**1**	**1**	**0**	**0**	**1**	**1**	**0**	**0**	**0**

Id	RW	Field	Value Id	Value	Description
A	RW	B2			y-intercept of 3rd piece wise linear function

27.1.13 B3

Address offset: 0x54C

y-intercept of 4th piece wise linear function

Bit number	31	30	29	28	27	26	25	24	23	22	21	20	19	18	17	16	15	14	13	12	11	10	9	8	7	6	5	4	3	2	1	0
Id																			A	A	A	A	A	A	A	A	A	A	A	A	A	A
Reset 0x00000012	**0**	**0**	**0**	**0**	**0**	**0**	**0**	**0**	**0**	**0**	**0**	**0**	**0**	**0**	**0**	**0**	**0**	**0**	**0**	**0**	**0**	**0**	**0**	**0**	**0**	**0**	**0**	**1**	**0**	**0**	**1**	**0**

Id	RW	Field	Value Id	Value	Description
A	RW	B3			y-intercept of 4th piece wise linear function

27.1.14 B4

Address offset: 0x550

y-intercept of 5th piece wise linear function

Bit number	31	30	29	28	27	26	25	24	23	22	21	20	19	18	17	16	15	14	13	12	11	10	9	8	7	6	5	4	3	2	1	0
Id																			A	A	A	A	A	A	A	A	A	A	A	A	A	A
Reset 0x0000006A	**0**	**0**	**0**	**0**	**0**	**0**	**0**	**0**	**0**	**0**	**0**	**0**	**0**	**0**	**0**	**0**	**0**	**0**	**0**	**0**	**0**	**0**	**0**	**0**	**0**	**1**	**1**	**0**	**1**	**0**	**1**	**0**

Id	RW	Field	Value Id	Value	Description
A	RW	B4			y-intercept of 5th piece wise linear function

27.1.15 B5

Address offset: 0x554

y-intercept of 6th piece wise linear function

Bit number	31	30	29	28	27	26	25	24	23	22	21	20	19	18	17	16	15	14	13	12	11	10	9	8	7	6	5	4	3	2	1	0
Id																			A	A	A	A	A	A	A	A	A	A	A	A	A	A
Reset 0x00003DD0	**0**	**0**	**0**	**0**	**0**	**0**	**0**	**0**	**0**	**0**	**0**	**0**	**0**	**0**	**0**	**0**	**0**	**0**	**1**	**1**	**1**	**1**	**0**	**1**	**1**	**1**	**0**	**1**	**0**	**0**	**0**	**0**

Id	RW	Field	Value Id	Value	Description
A	RW	B5			y-intercept of 6th piece wise linear function

27.1.16 T0

Address offset: 0x560

End point of 1st piece wise linear function

Bit number	31	30	29	28	27	26	25	24	23	22	21	20	19	18	17	16	15	14	13	12	11	10	9	8	7	6	5	4	3	2	1	0
Id																									A	A	A	A	A	A	A	A
Reset 0x000000E2	**0**	**0**	**0**	**0**	**0**	**0**	**0**	**0**	**0**	**0**	**0**	**0**	**0**	**0**	**0**	**0**	**0**	**0**	**0**	**0**	**0**	**0**	**0**	**0**	**1**	**1**	**1**	**0**	**0**	**0**	**1**	**0**

Id	RW	Field	Value Id	Value	Description
A	RW	T0			End point of 1st piece wise linear function

27.1.17 T1

Address offset: 0x564

End point of 2nd piece wise linear function

Bit number	31	30	29	28	27	26	25	24	23	22	21	20	19	18	17	16	15	14	13	12	11	10	9	8	7	6	5	4	3	2	1	0
Id																									A	A	A	A	A	A	A	A
Reset 0x00000000	**0**	**0**	**0**	**0**	**0**	**0**	**0**	**0**	**0**	**0**	**0**	**0**	**0**	**0**	**0**	**0**	**0**	**0**	**0**	**0**	**0**	**0**	**0**	**0**	**0**	**0**	**0**	**0**	**0**	**0**	**0**	**0**

Id	RW	Field	Value Id	Value	Description
A	RW	T1			End point of 2nd piece wise linear function

27.1.18 T2

Address offset: 0x568

End point of 3rd piece wise linear function

Bit number	31	30	29	28	27	26	25	24	23	22	21	20	19	18	17	16	15	14	13	12	11	10	9	8	7	6	5	4	3	2	1	0
Id																									A	A	A	A	A	A	A	A
Reset 0x00000014	**0**	**0**	**0**	**0**	**0**	**0**	**0**	**0**	**0**	**0**	**0**	**0**	**0**	**0**	**0**	**0**	**0**	**0**	**0**	**0**	**0**	**0**	**0**	**0**	**0**	**0**	**0**	**1**	**0**	**1**	**0**	**0**

Id	RW	Field	Value Id	Value	Description
A	RW	T2			End point of 3rd piece wise linear function

27.1.19 T3

Address offset: 0x56C

End point of 4th piece wise linear function

Bit number	31	30	29	28	27	26	25	24	23	22	21	20	19	18	17	16	15	14	13	12	11	10	9	8	7	6	5	4	3	2	1	0
Id																									A	A	A	A	A	A	A	A
Reset 0x00000019	**0**	**0**	**0**	**0**	**0**	**0**	**0**	**0**	**0**	**0**	**0**	**0**	**0**	**0**	**0**	**0**	**0**	**0**	**0**	**0**	**0**	**0**	**0**	**0**	**0**	**0**	**0**	**1**	**1**	**0**	**0**	**1**

Id	RW	Field	Value Id	Value	Description
A	RW	T3			End point of 4th piece wise linear function

27.1.20 T4

Address offset: 0x570

End point of 5th piece wise linear function

Bit number	31	30	29	28	27	26	25	24	23	22	21	20	19	18	17	16	15	14	13	12	11	10	9	8	7	6	5	4	3	2	1	0
Id																									A	A	A	A	A	A	A	A
Reset 0x00000050	**0**	**0**	**0**	**0**	**0**	**0**	**0**	**0**	**0**	**0**	**0**	**0**	**0**	**0**	**0**	**0**	**0**	**0**	**0**	**0**	**0**	**0**	**0**	**0**	**0**	**1**	**0**	**1**	**0**	**0**	**0**	**0**

Id	RW	Field	Value Id	Value	Description
A	RW	T4			End point of 5th piece wise linear function

27.2 Electrical Specification

27.2.1 Temperature Sensor Electrical Specification

Symbol	Description	Min.	Typ.	Max.	Units
t_{TEMP}	Time required for temperature measurement		36		µs
$T_{TEMP,RANGE}$	Temperature sensor range	-40		85	°C
$T_{TEMP,ACC}$	Temperature sensor accuracy	-5		5	°C
$T_{TEMP,RES}$	Temperature sensor resolution		0.25		°C
$T_{TEMP,STB}$	Sample to sample stability at constant device temperature		+/-0.25		°C
$T_{TEMP,OFFST}$	Sample offset at 25°C	-2.5		2.5	°C

28 ECB — AES electronic codebook mode encryption

The AES electronic codebook mode encryption (ECB) can be used for a range of cryptographic functions like hash generation, digital signatures, and keystream generation for data encryption/decryption. The ECB encryption block supports 128 bit AES encryption (encryption only, not decryption).

AES ECB operates with EasyDMA access to system Data RAM for in-place operations on cleartext and ciphertext during encryption. ECB uses the same AES core as the CCM and AAR blocks and is an asynchronous operation which may not complete if the AES core is busy.

AES ECB features:

- 128 bit AES encryption
- Supports standard AES ECB block encryption
- Memory pointer support
- DMA data transfer

AES ECB performs a 128 bit AES block encrypt. At the STARTECB task, data and key is loaded into the algorithm by EasyDMA. When output data has been written back to memory, the ENDECB event is triggered.

AES ECB can be stopped by triggering the STOPECB task.

28.1 Shared resources

The ECB, CCM, and AAR share the same AES module. The ECB will always have lowest priority and if there is a sharing conflict during encryption, the ECB operation will be aborted and an ERRORECB event will be generated.

28.2 EasyDMA

The ECB implements an EasyDMA mechanism for reading and writing to the Data RAM. This DMA cannot access the program memory or any other parts of the memory area except RAM.

If the ECBDATAPTR is not pointing to the Data RAM region, an EasyDMA transfer may result in a HardFault or RAM corruption. See *Memory* on page 20 for more information about the different memory regions.

The EasyDMA will have finished accessing the Data RAM when the ENDECB or ERRORECB is generated.

28.3 ECB data structure

Input to the block encrypt and output from the block encrypt are stored in the same data structure. ECBDATAPTR should point to this data structure before STARTECB is initiated.

Table 49: ECB data structure overview

Property	Address offset	Description
KEY	0	16 byte AES key
CLEARTEXT	16	16 byte AES cleartext input block
CIPHERTEXT	32	16 byte AES ciphertext output block

28.4 Registers

Table 50: Instances

Base address	Peripheral	Instance	Description	Configuration
0x4000E000	ECB	ECB	AES ECB Mode Encryption	

Table 51: Register Overview

Register	Offset	Description
TASKS_STARTECB	0x000	Start ECB block encrypt
TASKS_STOPECB	0x004	Abort a possible executing ECB operation
EVENTS_ENDECB	0x100	ECB block encrypt complete
EVENTS_ERRORECB	0x104	ECB block encrypt aborted because of a STOPECB task or due to an error
INTENSET	0x304	Enable interrupt
INTENCLR	0x308	Disable interrupt
ECBDATAPTR	0x504	ECB block encrypt memory pointers

28.4.1 INTENSET

Address offset: 0x304

Enable interrupt

Bit number				31	30	29	28	27	26	25	24	23	22	21	20	19	18	17	16	15	14	13	12	11	10	9	8	7	6	5	4	3	2	1	0
Id																																		B	A
Reset 0x00000000				**0**	**0**	**0**	**0**	**0**	**0**	**0**	**0**	**0**	**0**	**0**	**0**	**0**	**0**	**0**	**0**	**0**	**0**	**0**	**0**	**0**	**0**	**0**	**0**	**0**	**0**	**0**	**0**	**0**	**0**	**0**	**0**
Id	**RW**	**Field**	**Value Id**	**Value**																															
A	RW	ENDECB																																	
			Set	1																															
			Disabled	0																															
			Enabled	1																															
B	RW	ERRORECB																																	
			Set	1																															
			Disabled	0																															
			Enabled	1																															

28.4.2 INTENCLR

Address offset: 0x308

Disable interrupt

Bit number				31	30	29	28	27	26	25	24	23	22	21	20	19	18	17	16	15	14	13	12	11	10	9	8	7	6	5	4	3	2	1	0
Id																																		B	A
Reset 0x00000000				**0**	**0**	**0**	**0**	**0**	**0**	**0**	**0**	**0**	**0**	**0**	**0**	**0**	**0**	**0**	**0**	**0**	**0**	**0**	**0**	**0**	**0**	**0**	**0**	**0**	**0**	**0**	**0**	**0**	**0**	**0**	**0**
Id	**RW**	**Field**	**Value Id**	**Value**																															
A	RW	ENDECB																																	
			Clear	1																															
			Disabled	0																															
			Enabled	1																															
B	RW	ERRORECB																																	
			Clear	1																															
			Disabled	0																															
			Enabled	1																															

28.4.3 ECBDATAPTR

Address offset: 0x504

ECB block encrypt memory pointers

Bit number	31	30	29	28	27	26	25	24	23	22	21	20	19	18	17	16	15	14	13	12	11	10	9	8	7	6	5	4	3	2	1	0
Id	A	A	A	A	A	A	A	A	A	A	A	A	A	A	A	A	A	A	A	A	A	A	A	A	A	A	A	A	A	A	A	A
Reset 0x00000000	**0**	**0**	**0**	**0**	**0**	**0**	**0**	**0**	**0**	**0**	**0**	**0**	**0**	**0**	**0**	**0**	**0**	**0**	**0**	**0**	**0**	**0**	**0**	**0**	**0**	**0**	**0**	**0**	**0**	**0**	**0**	**0**

Id	RW	Field	Value Id	Value	Description
A	RW	ECBDATAPTR			Pointer to the ECB data structure (see Table 1 ECB data structure overview)

28.5 Electrical Specification

28.5.1 ECB Electrical Specification

Symbol	Description	Min.	Typ.	Max.	Units
t_{ECB}	Run time per 16 byte block in all modes		6		µs

29 CCM — AES CCM mode encryption

Cipher block chaining - message authentication code (CCM) mode is an authenticated encryption algorithm designed to provide both authentication and confidentiality during data transfer. CCM combines counter mode encryption and CBC-MAC authentication. The CCM terminology "Message authentication code (MAC)" is called the "Message integrity check (MIC)" in '*Bluetooth* terminology and also in this document.

The CCM block generates an encrypted keystream that is applied to input data using the XOR operation and generates the 4 byte MIC field in one operation. The CCM and radio can be configured to work synchronously. The CCM will encrypt in time for transmission and decrypt after receiving bytes into memory from the Radio. All operations can complete within the packet RX or TX time. CCM on this device is implemented according to *Bluetooth* requirements and the algorithm as defined in IETF *RFC3610*, and depends on the AES-128 block cipher. A description of the CCM algorithm can also be found in *NIST Special Publication 800-38C*. The *Bluetooth* specification describes the configuration of counter mode blocks and encryption blocks to implement compliant encryption for BLE.

The CCM block uses EasyDMA to load key, counter mode blocks (including the nonce required), and to read/write plain text and cipher text.

The AES CCM supports three operations: key-stream generation, packet encryption, and packet decryption. All these operations are done in compliance with the *Bluetooth* specification.[22] A new key-stream must be generated before a new packet encryption or packet decryption operation can be started.

A key-stream is generated by triggering the KSGEN task. An ENDKSGEN event will be generated when the new key-stream has been generated. The key-stream will be stored in the AES CCM's temporary memory area, specified by the SCRATCHPTR, where it will be used in subsequent encryption and decryption operations.

Encryption is started by triggering the CRYPT task with the MODE register set to ENCRYPTION. Similarly, decryption is started by triggering the same task with MODE set to DECRYPTION. An ENDCRYPT event will be generated when packet encryption is completed as well as when packet decryption is completed, see *Figure 58: Key-stream generation followed by encryption or decryption. The shortcut is optional.* on page 263.

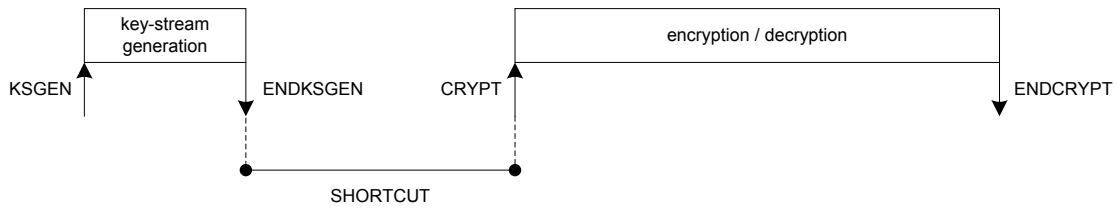

Figure 58: Key-stream generation followed by encryption or decryption. The shortcut is optional.

Key-stream generation, packet encryption, and packet decryption operations utilize the configuration specified in the data structure pointed to by the CNFPTR pointer. It is necessary to configure this pointer and its underlying data structure, and the MODE register before the KSGEN task is triggered. It is also necessary to configure the INPTR pointer and the OUTPTR pointer before the CRYPT task is triggered.

If a shortcut is used between ENDKSGEN event and CRYPT task, the INPTR pointer and the OUTPTR pointer must be configured before the KSGEN task is triggered.

The AES CCM supports different packet lengths, this is configured via the PACKETLENGTH field in the MODE register.

[22] *Bluetooth* AES CCM 128 bit block encryption, see *Bluetooth* Core specification Version 4.0.

29.1 Shared resources

The CCM shares registers and other resources with other peripherals that have the same ID as the CCM. The user must therefore disable all peripherals that have the same ID as the CCM before the CCM can be configured and used.

Disabling a peripheral that have the same ID as the CCM will not reset any of the registers that are shared with the CCM. It is therefore important to configure all relevant CCM registers explicitly to secure that it operates correctly.

See the Instantiation table in *Instantiation* on page 21 for details on peripherals and their IDs.

29.2 Encryption

During packet encryption, the AES CCM will read the unencrypted packet located in RAM at the address specified in the INPTR pointer, encrypt the packet and append a four byte long Message Integrity Check (MIC) field to the packet.

The AES CCM will also modify the length field of the packet to adjust for the appended MIC field, that is, add four bytes to the length, and store the resulting packet back into RAM at the address specified in the OUTPTR pointer, see *Figure 59: Encryption* on page 264.

Empty packets (length field is set to 0) will not be encrypted but instead moved unmodified through the AES CCM.

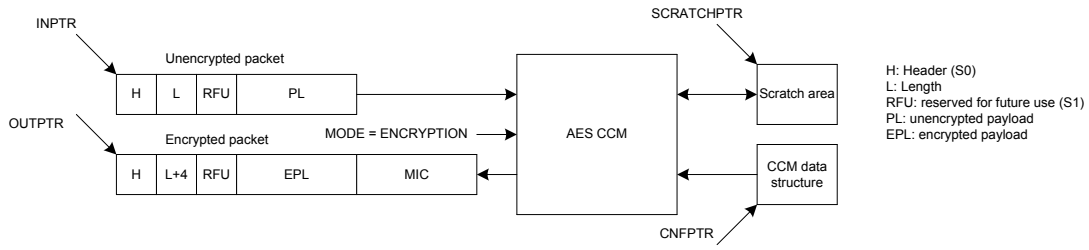

Figure 59: Encryption

29.3 Decryption

During packet decryption, the AES CCM will read the encrypted packet located in RAM at the address specified in the INPTR pointer, decrypt the packet, authenticate the packet's MIC field and generate the appropriate MIC status.

The AES CCM will also modify the length field of the packet to adjust for the MIC field, that is, subtract four bytes from the length, and then store the decrypted packet into RAM at the address pointed to by the OUTPTR pointer, see *Figure 60: Decryption* on page 265.

The CCM is only able to decrypt packets that are at least 5 bytes long, that is, 1 byte or more encrypted payload (EPL) and 4 bytes of MIC. The CCM will therefore generate a MIC error for packets where the length field is set to 1, 2, 3 or 4.

Empty packets (length field is set to 0) will not be decrypted but instead moved unmodified through the AES CCM, these packets will always pass the MIC check.

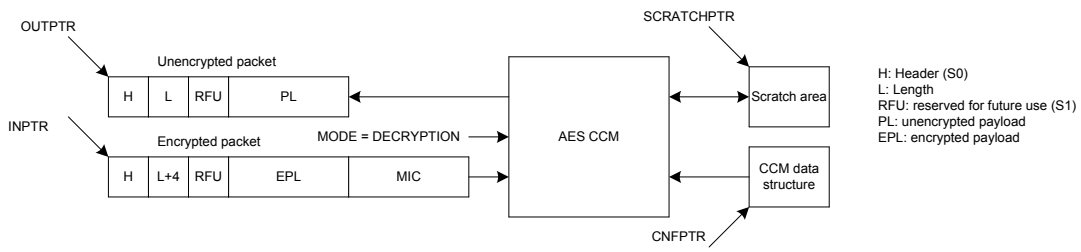

Figure 60: Decryption

29.4 AES CCM and RADIO concurrent operation

The AES CCM is designed to run in parallel with the RADIO to enable on-the-fly encryption and decryption of RADIO packets without CPU involvement. To facilitate this, the RADIO has to be configured with specific settings.

Table 52: Radio configuration settings

Radio parameter	Value	Description
PCNF0.S0LEN	1	Length of HEADER field in: *Table 54: Data structure for unencrypted packet* on page 267 and *Table 55: Data structure for encrypted packet* on page 267.
PCNF0.LFLEN	5 or 8	Length of LENGTH field in: *Table 54: Data structure for unencrypted packet* on page 267 and *Table 55: Data structure for encrypted packet* on page 267.
PCNF0.S1LEN	3 or 0	Length of the RFU field in: *Table 54: Data structure for unencrypted packet* on page 267 and *Table 55: Data structure for encrypted packet* on page 267. The combined length of LENGTH and RFU must always be 8 bit.
PCNF0.S1	Include	Always include the S1 field (RFU field) in RAM to secure that the same data structure can be used for PCNF0.S1LEN = 3 and PCNF0.S1LEN = 0: *Table 54: Data structure for unencrypted packet* on page 267 and *Table 55: Data structure for encrypted packet* on page 267.
MODE	Ble_1Mbit	Data rate. Must match CCM->MODE.DATARATE
PCNF1.BALEN	3	Length of address (32 bit)
CRCCNF.LEN	3	Length of CRC (24 bit)

29.5 Encrypting packets on-the-fly in radio transmit mode

When the AES CCM is encrypting a packet on-the-fly at the same time as the RADIO is transmitting it, the RADIO must read the encrypted packet from the same memory location as the AES CCM is writing to.

The OUTPTR pointer in the AES CCM must therefore point to the same memory location as the PACKETPTR pointer in the RADIO, see *Figure 61: Configuration of on-the-fly encryption* on page 265.

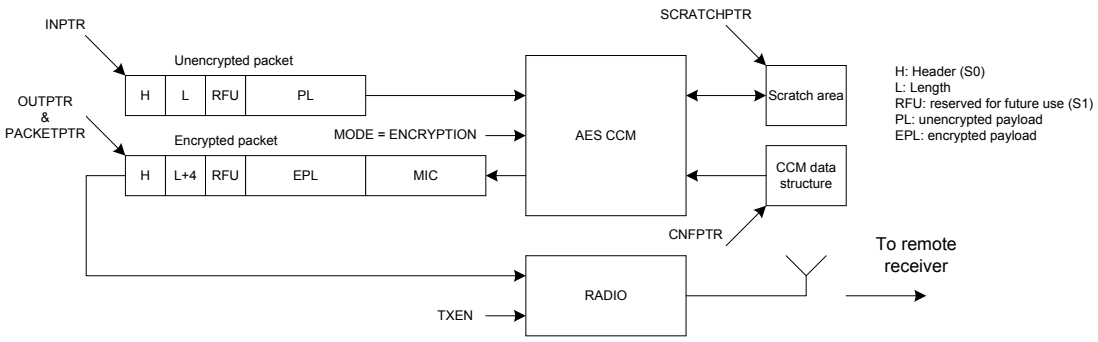

Figure 61: Configuration of on-the-fly encryption

In order to match the RADIO's timing, the KSGEN task must be triggered no later than when the START task in the RADIO is triggered, in addition the shortcut between the ENDKSGEN event and the CRYPT task must be enabled. This use-case is illustrated in *Figure 62: On-the-fly encryption using a PPI connection* on page 266 using a PPI connection between the READY event in the RADIO and the KSGEN task in the AES CCM.

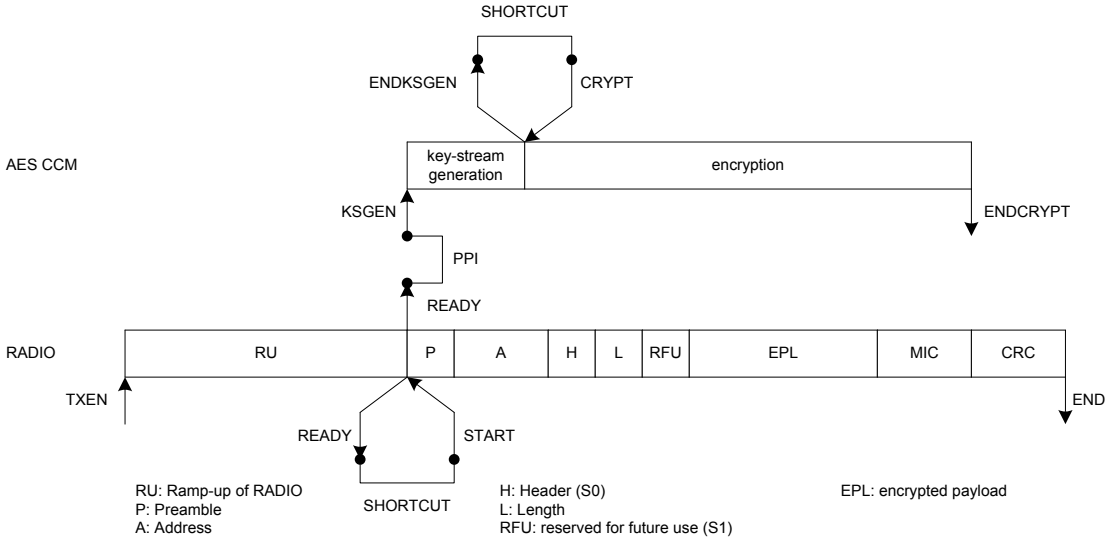

Figure 62: On-the-fly encryption using a PPI connection

29.6 Decrypting packets on-the-fly in radio receive mode

When the AES CCM is decrypting a packet on-the-fly at the same time as the RADIO is receiving it, the AES CCM must read the encrypted packet from the same memory location as the RADIO is writing to.

The INPTR pointer in the AES CCM must therefore point to the same memory location as the PACKETPTR pointer in the RADIO, see *Figure 63: Configuration of on-the-fly decryption* on page 266.

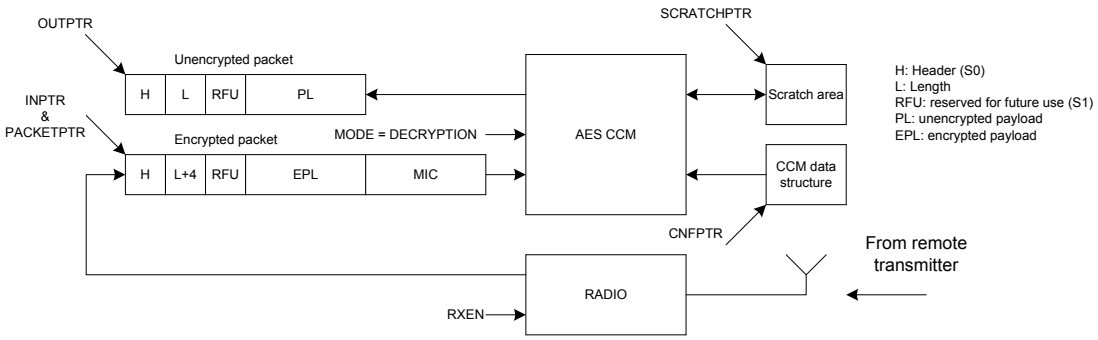

Figure 63: Configuration of on-the-fly decryption

In order to match the RADIO's timing, the KSGEN task must be triggered no later than when the START task in the RADIO is triggered. In addition, the CRYPT task must be triggered no earlier than when the ADDRESS event is generated by the RADIO.

If the CRYPT task is triggered exactly at the same time as the ADDRESS event is generated by the RADIO, the AES CCM will guarantee that the decryption is completed no later than when the END event in the RADIO is generated.

This use-case is illustrated in *Figure 64: On-the-fly decryption using a PPI connection between the READY event in the RADIO and the KSGEN task in the AES CCM* on page 267 using a PPI connection between the ADDRESS event in the RADIO and the CRYPT task in the AES CCM. The KSGEN task is triggered from the READY event in the RADIO through a PPI connection.

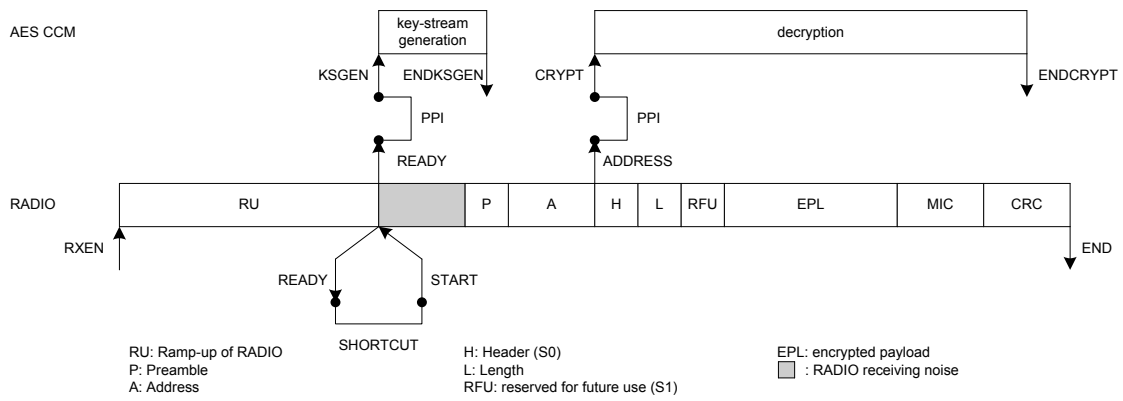

Figure 64: On-the-fly decryption using a PPI connection between the READY event in the RADIO and the KSGEN task in the AES CCM

29.7 CCM data structure

The CCM data structure is located in Data RAM at the memory location specified by the CNFPTR pointer register.

Table 53: CCM data structure overview

Property	Address offset	Description
KEY	0	16 byte AES key
PKTCTR	16	Octet0 (LSO) of packet counter
	17	Octet1 of packet counter
	18	Octet2 of packet counter
	19	Octet3 of packet counter
	20	Bit 6 – Bit 0: Octet4 (7 most significant bits of packet counter, with Bit 6 being the most significant bit) Bit7: Ignored
	21	Ignored
	22	Ignored
	23	Ignored
	24	Bit 0: Direction bit Bit 7 – Bit 1: Zero padded
IV	25	8 byte initialization vector (IV) Octet0 (LSO) of IV, Octet1 of IV, … , Octet7 (MSO) of IV

The NONCE vector (as specified by the *Bluetooth* Core Specification) will be generated by hardware based on the information specified in the CCM data structure from *Table 53: CCM data structure overview* on page 267 .

Table 54: Data structure for unencrypted packet

Property	Address offset	Description
HEADER	0	Packet Header
LENGTH	1	Number of bytes in unencrypted payload
RFU	2	Reserved Future Use
PAYLOAD	3	Unencrypted payload

Table 55: Data structure for encrypted packet

Property	Address offset	Description
HEADER	0	Packet Header
LENGTH	1	Number of bytes in encrypted payload including length of MIC **Important:** LENGTH will be 0 for empty packets since the MIC is not added to empty packets
RFU	2	Reserved Future Use
PAYLOAD	3	Encrypted payload

Property	Address offset	Description
MIC	3 + payload length	ENCRYPT: 4 bytes encrypted MIC

Important: MIC is not added to empty packets

29.8 EasyDMA and ERROR event

The CCM implements an EasyDMA mechanism for reading and writing to the RAM.

In some scenarios where the CPU and other DMA enabled peripherals are accessing the RAM at the same time, the CCM DMA could experience some bus conflicts which may also result in an error during encryption. If this happens, the ERROR event will be generated.

The EasyDMA will have finished accessing the RAM when the ENDKSGEN and ENDCRYPT events are generated.

If the CNFPTR, SCRATCHPTR, INPTR and the OUTPTR are not pointing to the Data RAM region, an EasyDMA transfer may result in a HardFault or RAM corruption. See *Memory* on page 20 for more information about the different memory regions.

29.9 Registers

Table 56: Instances

Base address	Peripheral	Instance	Description	Configuration
0x4000F000	CCM	CCM	AES CCM Mode Encryption	

Table 57: Register Overview

Register	Offset	Description
TASKS_KSGEN	0x000	Start generation of key-stream. This operation will stop by itself when completed.
TASKS_CRYPT	0x004	Start encryption/decryption. This operation will stop by itself when completed.
TASKS_STOP	0x008	Stop encryption/decryption
EVENTS_ENDKSGEN	0x100	Key-stream generation complete
EVENTS_ENDCRYPT	0x104	Encrypt/decrypt complete
EVENTS_ERROR	0x108	CCM error event
SHORTS	0x200	Shortcut register
INTENSET	0x304	Enable interrupt
INTENCLR	0x308	Disable interrupt
MICSTATUS	0x400	MIC check result
ENABLE	0x500	Enable
MODE	0x504	Operation mode
CNFPTR	0x508	Pointer to data structure holding AES key and NONCE vector
INPTR	0x50C	Input pointer
OUTPTR	0x510	Output pointer
SCRATCHPTR	0x514	Pointer to data area used for temporary storage

29.9.1 SHORTS

Address offset: 0x200

Shortcut register

Bit number	31	30	29	28	27	26	25	24	23	22	21	20	19	18	17	16	15	14	13	12	11	10	9	8	7	6	5	4	3	2	1	0
Id																																A
Reset 0x00000000	**0**	**0**	**0**	**0**	**0**	**0**	**0**	**0**	**0**	**0**	**0**	**0**	**0**	**0**	**0**	**0**	**0**	**0**	**0**	**0**	**0**	**0**	**0**	**0**	**0**	**0**	**0**	**0**	**0**	**0**	**0**	**0**

Id	RW	Field	Value Id	Value	Description
A	RW	ENDKSGEN_CRYPT			Shortcut between ENDKSGEN event and CRYPT task See *EVENTS_ENDKSGEN* and *TASKS_CRYPT*
			Disabled	0	Disable shortcut

Bit number				31	30	29	28	27	26	25	24	23	22	21	20	19	18	17	16	15	14	13	12	11	10	9	8	7	6	5	4	3	2	1	0
Id																																			A
Reset 0x00000000				**0**	**0**	**0**	**0**	**0**	**0**	**0**	**0**	**0**	**0**	**0**	**0**	**0**	**0**	**0**	**0**	**0**	**0**	**0**	**0**	**0**	**0**	**0**	**0**	**0**	**0**	**0**	**0**	**0**	**0**	**0**	**0**
Id	**RW**	**Field**	**Value Id**	**Value**																															**Description**
			Enabled	1																															Enable shortcut

29.9.2 INTENSET

Address offset: 0x304

Enable interrupt

Bit number				31	30	29	28	27	26	25	24	23	22	21	20	19	18	17	16	15	14	13	12	11	10	9	8	7	6	5	4	3	2	1	0
Id																																	C	B	A
Reset 0x00000000				**0**	**0**	**0**	**0**	**0**	**0**	**0**	**0**	**0**	**0**	**0**	**0**	**0**	**0**	**0**	**0**	**0**	**0**	**0**	**0**	**0**	**0**	**0**	**0**	**0**	**0**	**0**	**0**	**0**	**0**	**0**	**0**
Id	**RW**	**Field**	**Value Id**	**Value**																															**Description**
A	RW	ENDKSGEN																																	Write '1' to Enable interrupt for ENDKSGEN event See *EVENTS_ENDKSGEN*
			Set	1																															Enable
			Disabled	0																															Read: Disabled
			Enabled	1																															Read: Enabled
B	RW	ENDCRYPT																																	Write '1' to Enable interrupt for ENDCRYPT event See *EVENTS_ENDCRYPT*
			Set	1																															Enable
			Disabled	0																															Read: Disabled
			Enabled	1																															Read: Enabled
C	RW	ERROR																																	Write '1' to Enable interrupt for ERROR event See *EVENTS_ERROR*
			Set	1																															Enable
			Disabled	0																															Read: Disabled
			Enabled	1																															Read: Enabled

29.9.3 INTENCLR

Address offset: 0x308

Disable interrupt

Bit number				31	30	29	28	27	26	25	24	23	22	21	20	19	18	17	16	15	14	13	12	11	10	9	8	7	6	5	4	3	2	1	0
Id																																	C	B	A
Reset 0x00000000				**0**	**0**	**0**	**0**	**0**	**0**	**0**	**0**	**0**	**0**	**0**	**0**	**0**	**0**	**0**	**0**	**0**	**0**	**0**	**0**	**0**	**0**	**0**	**0**	**0**	**0**	**0**	**0**	**0**	**0**	**0**	**0**
Id	**RW**	**Field**	**Value Id**	**Value**																															**Description**
A	RW	ENDKSGEN																																	Write '1' to Disable interrupt for ENDKSGEN event See *EVENTS_ENDKSGEN*
			Clear	1																															Disable
			Disabled	0																															Read: Disabled
			Enabled	1																															Read: Enabled
B	RW	ENDCRYPT																																	Write '1' to Disable interrupt for ENDCRYPT event See *EVENTS_ENDCRYPT*
			Clear	1																															Disable
			Disabled	0																															Read: Disabled
			Enabled	1																															Read: Enabled
C	RW	ERROR																																	Write '1' to Disable interrupt for ERROR event See *EVENTS_ERROR*
			Clear	1																															Disable
			Disabled	0																															Read: Disabled
			Enabled	1																															Read: Enabled

29.9.4 MICSTATUS

Address offset: 0x400

MIC check result

Bit number	31	30	29	28	27	26	25	24	23	22	21	20	19	18	17	16	15	14	13	12	11	10	9	8	7	6	5	4	3	2	1	0
Id																																A
Reset 0x00000000	**0**	**0**	**0**	**0**	**0**	**0**	**0**	**0**	**0**	**0**	**0**	**0**	**0**	**0**	**0**	**0**	**0**	**0**	**0**	**0**	**0**	**0**	**0**	**0**	**0**	**0**	**0**	**0**	**0**	**0**	**0**	**0**

Id	RW	Field	Value Id	Value	Description
A	R	MICSTATUS			The result of the MIC check performed during the previous decryption operation
			CheckFailed	0	MIC check failed
			CheckPassed	1	MIC check passed

29.9.5 ENABLE

Address offset: 0x500

Enable

Bit number	31	30	29	28	27	26	25	24	23	22	21	20	19	18	17	16	15	14	13	12	11	10	9	8	7	6	5	4	3	2	1	0
Id																															A	A
Reset 0x00000000	**0**	**0**	**0**	**0**	**0**	**0**	**0**	**0**	**0**	**0**	**0**	**0**	**0**	**0**	**0**	**0**	**0**	**0**	**0**	**0**	**0**	**0**	**0**	**0**	**0**	**0**	**0**	**0**	**0**	**0**	**0**	**0**

Id	RW	Field	Value Id	Value	Description
A	RW	ENABLE			Enable or disable CCM
			Disabled	0	Disable
			Enabled	2	Enable

29.9.6 MODE

Address offset: 0x504

Operation mode

Bit number	31	30	29	28	27	26	25	24	23	22	21	20	19	18	17	16	15	14	13	12	11	10	9	8	7	6	5	4	3	2	1	0
Id								C								B																A
Reset 0x00000001	**0**	**0**	**0**	**0**	**0**	**0**	**0**	**0**	**0**	**0**	**0**	**0**	**0**	**0**	**0**	**0**	**0**	**0**	**0**	**0**	**0**	**0**	**0**	**0**	**0**	**0**	**0**	**0**	**0**	**0**	**0**	**1**

Id	RW	Field	Value Id	Value	Description
A	RW	MODE			The mode of operation to be used
			Encryption	0	AES CCM packet encryption mode
			Decryption	1	AES CCM packet decryption mode
B	RW	DATARATE			Data rate that the CCM shall run in synch with
			1Mbit	0	In synch with 1 Mbit data rate
			2Mbit	1	In synch with 2 Mbit data rate
C	RW	LENGTH			Packet length configuration
			Default	0	Default length. Effective length of LENGTH field is 5-bit
			Extended	1	Extended length. Effective length of LENGTH field is 8-bit

29.9.7 CNFPTR

Address offset: 0x508

Pointer to data structure holding AES key and NONCE vector

Bit number	31	30	29	28	27	26	25	24	23	22	21	20	19	18	17	16	15	14	13	12	11	10	9	8	7	6	5	4	3	2	1	0
Id	A	A	A	A	A	A	A	A	A	A	A	A	A	A	A	A	A	A	A	A	A	A	A	A	A	A	A	A	A	A	A	A
Reset 0x00000000	**0**	**0**	**0**	**0**	**0**	**0**	**0**	**0**	**0**	**0**	**0**	**0**	**0**	**0**	**0**	**0**	**0**	**0**	**0**	**0**	**0**	**0**	**0**	**0**	**0**	**0**	**0**	**0**	**0**	**0**	**0**	**0**

Id	RW	Field	Value Id	Value	Description
A	RW	CNFPTR			Pointer to the data structure holding the AES key and the CCM NONCE vector (see Table 1 CCM data structure overview)

29.9.8 INPTR

Address offset: 0x50C

Input pointer

Bit number	31	30	29	28	27	26	25	24	23	22	21	20	19	18	17	16	15	14	13	12	11	10	9	8	7	6	5	4	3	2	1	0
Id	A	A	A	A	A	A	A	A	A	A	A	A	A	A	A	A	A	A	A	A	A	A	A	A	A	A	A	A	A	A	A	A
Reset 0x00000000	**0**	**0**	**0**	**0**	**0**	**0**	**0**	**0**	**0**	**0**	**0**	**0**	**0**	**0**	**0**	**0**	**0**	**0**	**0**	**0**	**0**	**0**	**0**	**0**	**0**	**0**	**0**	**0**	**0**	**0**	**0**	**0**

Id	RW	Field	Value Id	Value	Description
A	RW	INPTR			Input pointer

29.9.9 OUTPTR

Address offset: 0x510

Output pointer

Bit number	31	30	29	28	27	26	25	24	23	22	21	20	19	18	17	16	15	14	13	12	11	10	9	8	7	6	5	4	3	2	1	0
Id	A	A	A	A	A	A	A	A	A	A	A	A	A	A	A	A	A	A	A	A	A	A	A	A	A	A	A	A	A	A	A	A
Reset 0x00000000	**0**	**0**	**0**	**0**	**0**	**0**	**0**	**0**	**0**	**0**	**0**	**0**	**0**	**0**	**0**	**0**	**0**	**0**	**0**	**0**	**0**	**0**	**0**	**0**	**0**	**0**	**0**	**0**	**0**	**0**	**0**	**0**

Id	RW	Field	Value Id	Value	Description
A	RW	OUTPTR			Output pointer

29.9.10 SCRATCHPTR

Address offset: 0x514

Pointer to data area used for temporary storage

Bit number	31	30	29	28	27	26	25	24	23	22	21	20	19	18	17	16	15	14	13	12	11	10	9	8	7	6	5	4	3	2	1	0
Id	A	A	A	A	A	A	A	A	A	A	A	A	A	A	A	A	A	A	A	A	A	A	A	A	A	A	A	A	A	A	A	A
Reset 0x00000000	**0**	**0**	**0**	**0**	**0**	**0**	**0**	**0**	**0**	**0**	**0**	**0**	**0**	**0**	**0**	**0**	**0**	**0**	**0**	**0**	**0**	**0**	**0**	**0**	**0**	**0**	**0**	**0**	**0**	**0**	**0**	**0**

Id	RW	Field	Value Id	Value	Description
A	RW	SCRATCHPTR			Pointer to a "scratch" data area used for temporary storage during key-stream generation, MIC generation and encryption/decryption. The scratch area is used for temporary storage of data during key-stream generation and encryption. A space of 43 bytes must be reserved.

30 AAR — Accelerated address resolver

Accelerated address resolver is a cryptographic support function for implementing the "Resolvable Private Address Resolution Procedure" described in the *Bluetooth Core specification* v4.0. "Resolvable private address generation" should be achieved using ECB and is not supported by AAR.

The procedure allows two devices that share a secret key to generate and resolve a hash based on their device address. The AAR block enables real-time address resolution on incoming packets when configured as described in this chapter. This allows real-time packet filtering (whitelisting) using a list of known shared keys (Identity Resolving Keys (IRK) in *Bluetooth*).

30.1 Shared resources

The AAR shares registers and other resources with the peripherals that have the same ID as the AAR. The user must therefore disable all peripherals that have the same ID as the AAR before the AAR can be configured and used.

Disabling a peripheral that have the same ID as the AAR will not reset any of the registers that are shared with the AAR. It is therefore important to configure all relevant AAR registers explicitly to secure that it operates correctly.

See the Instantiation table in *Instantiation* on page 21 for details on peripherals and their IDs.

30.2 EasyDMA

The AAR implements EasyDMA for reading and writing to the RAM. The EasyDMA will have finished accessing the RAM when the END, RESOLVED, and NOTRESOLVED events are generated.

If the IRKPTR, ADDRPTR and the SCRATCHPTR is not pointing to the Data RAM region, an EasyDMA transfer may result in a HardFault or RAM corruption. See *Memory* on page 20 for more information about the different memory regions.

30.3 Resolving a resolvable address

As per *Bluetooth* specification, a private resolvable address is composed of six bytes.

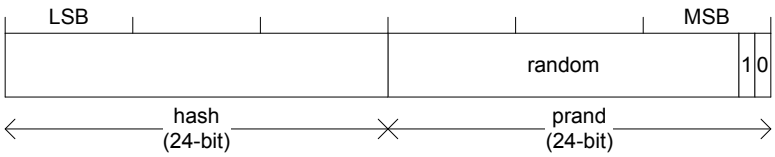

Figure 65: Resolvable address

To resolve an address the ADDRPTR register must point to the start of packet. The resolver is started by triggering the START task. A RESOLVED event is generated when the AAR manages to resolve the address using one of the Identity Resolving Keys (IRK) found in the IRK data structure. The AAR will use the IRK specified in the register IRK0 to IRK15 starting from IRK0. How many to be used is specified by the NIRK register. The AAR module will generate a NOTRESOLVED event if it is not able to resolve the address using the specified list of IRKs.

The AAR will go through the list of available IRKs in the IRK data structure and for each IRK try to resolve the address according to the Resolvable Private Address Resolution Procedure described in the *Bluetooth* Specification[23]. The time it takes to resolve an address may vary depending on where in the list the

[23] *Bluetooth* Specification Version 4.0 [Vol 3] chapter 10.8.2.3.

resolvable address is located. The resolution time will also be affected by RAM accesses performed by other peripherals and the CPU. See the *Electrical specifications* for more information about resolution time.

The AAR will only do a comparison of the received address to those programmed in the module. And not check what type of address it actually is.

The AAR will stop as soon as it has managed to resolve the address, or after trying to resolve the address using NIRK number of IRKs from the IRK data structure. The AAR will generate an END event after it has stopped.

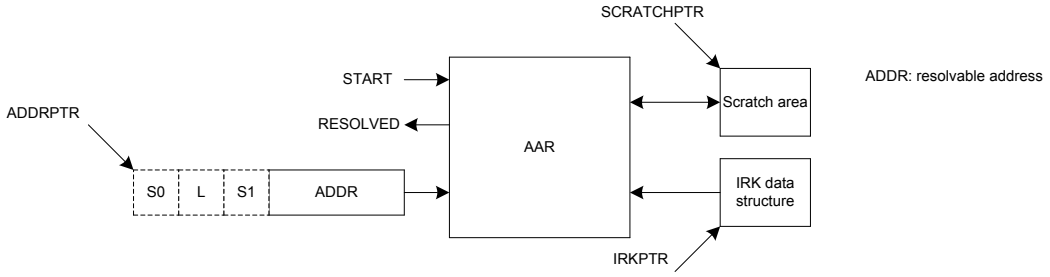

Figure 66: Address resolution with packet preloaded into RAM

30.4 Use case example for chaining RADIO packet reception with address resolution using AAR

The AAR may be started as soon as the 6 bytes required by the AAR have been received by the RADIO and stored in RAM. The ADDRPTR pointer must point to the start of packet.

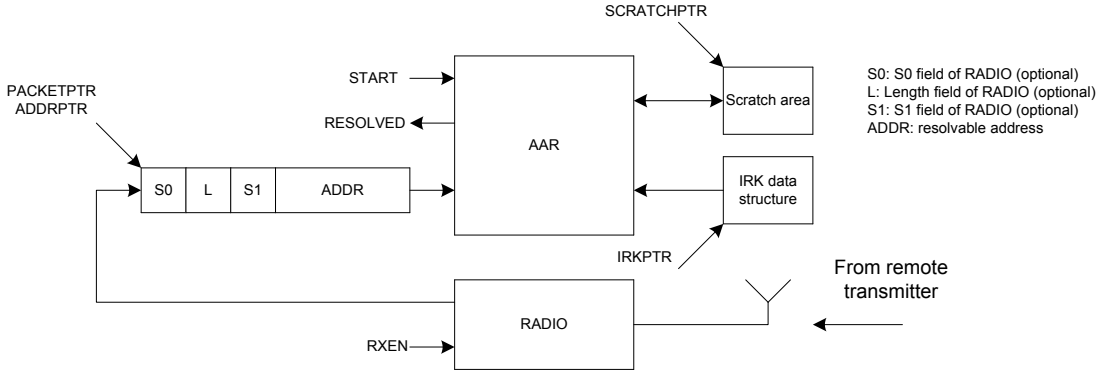

Figure 67: Address resolution with packet loaded into RAM by the RADIO

30.5 IRK data structure

The IRK data structure is located in RAM at the memory location specified by the CNFPTR pointer register.

Table 58: IRK data structure overview

Property	Address offset	Description
IRK0	0	IRK number 0 (16 - byte)
IRK1	16	IRK number 1 (16 - byte)
..	..	..
IRK15	240	IRK number 15 (16 - byte)

30.6 Registers

Table 59: Instances

Base address	Peripheral	Instance	Description	Configuration
0x4000F000	AAR	AAR	Accelerated Address Resolver	

Table 60: Register Overview

Register	Offset	Description
TASKS_START	0x000	Start resolving addresses based on IRKs specified in the IRK data structure
TASKS_STOP	0x008	Stop resolving addresses
EVENTS_END	0x100	Address resolution procedure complete
EVENTS_RESOLVED	0x104	Address resolved
EVENTS_NOTRESOLVED	0x108	Address not resolved
INTENSET	0x304	Enable interrupt
INTENCLR	0x308	Disable interrupt
STATUS	0x400	Resolution status
ENABLE	0x500	Enable AAR
NIRK	0x504	Number of IRKs
IRKPTR	0x508	Pointer to IRK data structure
ADDRPTR	0x510	Pointer to the resolvable address
SCRATCHPTR	0x514	Pointer to data area used for temporary storage

30.6.1 INTENSET

Address offset: 0x304

Enable interrupt

Bit number	31	30	29	28	27	26	25	24	23	22	21	20	19	18	17	16	15	14	13	12	11	10	9	8	7	6	5	4	3	2	1	0
Id																														C	B	A
Reset 0x00000000	**0**	**0**	**0**	**0**	**0**	**0**	**0**	**0**	**0**	**0**	**0**	**0**	**0**	**0**	**0**	**0**	**0**	**0**	**0**	**0**	**0**	**0**	**0**	**0**	**0**	**0**	**0**	**0**	**0**	**0**	**0**	**0**

Id	RW	Field	Value Id	Value	Description
A	RW	END			Write '1' to Enable interrupt for END event See *EVENTS_END*
			Set	1	Enable
			Disabled	0	Read: Disabled
			Enabled	1	Read: Enabled
B	RW	RESOLVED			Write '1' to Enable interrupt for RESOLVED event See *EVENTS_RESOLVED*
			Set	1	Enable
			Disabled	0	Read: Disabled
			Enabled	1	Read: Enabled
C	RW	NOTRESOLVED			Write '1' to Enable interrupt for NOTRESOLVED event See *EVENTS_NOTRESOLVED*
			Set	1	Enable
			Disabled	0	Read: Disabled
			Enabled	1	Read: Enabled

30.6.2 INTENCLR

Address offset: 0x308

Disable interrupt

Bit number				31	30	29	28	27	26	25	24	23	22	21	20	19	18	17	16	15	14	13	12	11	10	9	8	7	6	5	4	3	2	1	0
Id																																	C	B	A
Reset 0x00000000				**0**	**0**	**0**	**0**	**0**	**0**	**0**	**0**	**0**	**0**	**0**	**0**	**0**	**0**	**0**	**0**	**0**	**0**	**0**	**0**	**0**	**0**	**0**	**0**	**0**	**0**	**0**	**0**	**0**	**0**	**0**	**0**
Id	**RW**	**Field**	**Value Id**	**Value**																															**Description**
A	RW	END																																	Write '1' to Disable interrupt for END event See *EVENTS_END*
			Clear	1																															Disable
			Disabled	0																															Read: Disabled
			Enabled	1																															Read: Enabled
B	RW	RESOLVED																																	Write '1' to Disable interrupt for RESOLVED event See *EVENTS_RESOLVED*
			Clear	1																															Disable
			Disabled	0																															Read: Disabled
			Enabled	1																															Read: Enabled
C	RW	NOTRESOLVED																																	Write '1' to Disable interrupt for NOTRESOLVED event See *EVENTS_NOTRESOLVED*
			Clear	1																															Disable
			Disabled	0																															Read: Disabled
			Enabled	1																															Read: Enabled

30.6.3 STATUS

Address offset: 0x400

Resolution status

Bit number				31	30	29	28	27	26	25	24	23	22	21	20	19	18	17	16	15	14	13	12	11	10	9	8	7	6	5	4	3	2	1	0
Id																																A	A	A	A
Reset 0x00000000				**0**	**0**	**0**	**0**	**0**	**0**	**0**	**0**	**0**	**0**	**0**	**0**	**0**	**0**	**0**	**0**	**0**	**0**	**0**	**0**	**0**	**0**	**0**	**0**	**0**	**0**	**0**	**0**	**0**	**0**	**0**	**0**
Id	**RW**	**Field**	**Value Id**	**Value**																															**Description**
A	R	STATUS		[0..15]																															The IRK that was used last time an address was resolved

30.6.4 ENABLE

Address offset: 0x500

Enable AAR

Bit number				31	30	29	28	27	26	25	24	23	22	21	20	19	18	17	16	15	14	13	12	11	10	9	8	7	6	5	4	3	2	1	0
Id																																		A	A
Reset 0x00000000				**0**	**0**	**0**	**0**	**0**	**0**	**0**	**0**	**0**	**0**	**0**	**0**	**0**	**0**	**0**	**0**	**0**	**0**	**0**	**0**	**0**	**0**	**0**	**0**	**0**	**0**	**0**	**0**	**0**	**0**	**0**	**0**
Id	**RW**	**Field**	**Value Id**	**Value**																															**Description**
A	RW	ENABLE																																	Enable or disable AAR
			Disabled	0																															Disable
			Enabled	3																															Enable

30.6.5 NIRK

Address offset: 0x504

Number of IRKs

Bit number				31	30	29	28	27	26	25	24	23	22	21	20	19	18	17	16	15	14	13	12	11	10	9	8	7	6	5	4	3	2	1	0
Id																															A	A	A	A	A
Reset 0x00000001				**0**	**0**	**0**	**0**	**0**	**0**	**0**	**0**	**0**	**0**	**0**	**0**	**0**	**0**	**0**	**0**	**0**	**0**	**0**	**0**	**0**	**0**	**0**	**0**	**0**	**0**	**0**	**0**	**0**	**0**	**0**	**1**
Id	**RW**	**Field**	**Value Id**	**Value**																															**Description**
A	RW	NIRK		[1..16]																															Number of Identity root keys available in the IRK data structure

30.6.6 IRKPTR

Address offset: 0x508

Pointer to IRK data structure

Bit number	31	30	29	28	27	26	25	24	23	22	21	20	19	18	17	16	15	14	13	12	11	10	9	8	7	6	5	4	3	2	1	0
Id	A	A	A	A	A	A	A	A	A	A	A	A	A	A	A	A	A	A	A	A	A	A	A	A	A	A	A	A	A	A	A	A
Reset 0x00000000	**0**	**0**	**0**	**0**	**0**	**0**	**0**	**0**	**0**	**0**	**0**	**0**	**0**	**0**	**0**	**0**	**0**	**0**	**0**	**0**	**0**	**0**	**0**	**0**	**0**	**0**	**0**	**0**	**0**	**0**	**0**	**0**

Id	RW	Field	Value Id	Value	Description
A	RW	IRKPTR			Pointer to the IRK data structure

30.6.7 ADDRPTR

Address offset: 0x510

Pointer to the resolvable address

Bit number	31	30	29	28	27	26	25	24	23	22	21	20	19	18	17	16	15	14	13	12	11	10	9	8	7	6	5	4	3	2	1	0
Id	A	A	A	A	A	A	A	A	A	A	A	A	A	A	A	A	A	A	A	A	A	A	A	A	A	A	A	A	A	A	A	A
Reset 0x00000000	**0**	**0**	**0**	**0**	**0**	**0**	**0**	**0**	**0**	**0**	**0**	**0**	**0**	**0**	**0**	**0**	**0**	**0**	**0**	**0**	**0**	**0**	**0**	**0**	**0**	**0**	**0**	**0**	**0**	**0**	**0**	**0**

Id	RW	Field	Value Id	Value	Description
A	RW	ADDRPTR			Pointer to the resolvable address (6-bytes)

30.6.8 SCRATCHPTR

Address offset: 0x514

Pointer to data area used for temporary storage

Bit number	31	30	29	28	27	26	25	24	23	22	21	20	19	18	17	16	15	14	13	12	11	10	9	8	7	6	5	4	3	2	1	0
Id	A	A	A	A	A	A	A	A	A	A	A	A	A	A	A	A	A	A	A	A	A	A	A	A	A	A	A	A	A	A	A	A
Reset 0x00000000	**0**	**0**	**0**	**0**	**0**	**0**	**0**	**0**	**0**	**0**	**0**	**0**	**0**	**0**	**0**	**0**	**0**	**0**	**0**	**0**	**0**	**0**	**0**	**0**	**0**	**0**	**0**	**0**	**0**	**0**	**0**	**0**

Id	RW	Field	Value Id	Value	Description
A	RW	SCRATCHPTR			Pointer to a "scratch" data area used for temporary storage during resolution.A space of minimum 3 bytes must be reserved.

30.7 Electrical Specification

30.7.1 AAR Electrical Specification

Symbol	Description	Min.	Typ.	Max.	Units
$t_{AAR,8}$	Time for address resolution of 8 IRKs		48		µs

31 SPIM — Serial peripheral interface master with EasyDMA

The SPI master can communicate with multiple slaves using individual chip select signals for each of the slave devices attached to a bus.

Listed here are the main features for the SPIM

- Three SPIM instances
- SPI mode 0-3
- EasyDMA direct transfer to/from RAM for both SPI Slave and SPI Master
- Individual selection of IO pin for each SPI signal

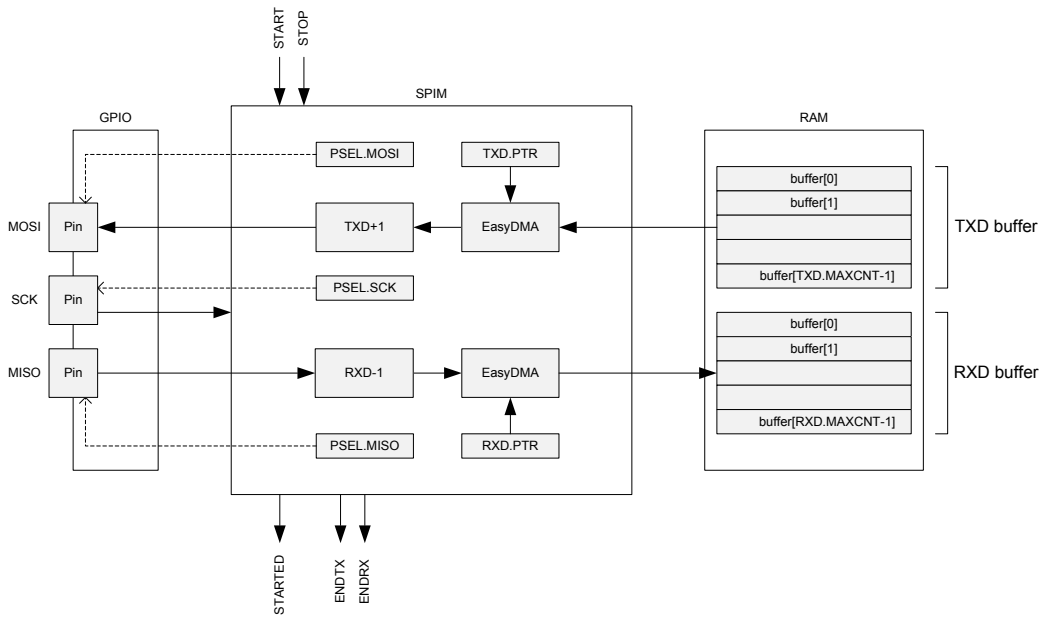

Figure 68: SPIM — SPI master with EasyDMA

The SPIM does not implement support for chip select directly. Therefore, the CPU must use available GPIOs to select the correct slave and control this independently of the SPI master. The SPIM supports SPI modes 0 through 3. The CONFIG register allows setting CPOL and CPHA appropriately.

Table 61: SPI modes

Mode	Clock polarity CPOL	Clock phase CPHA
SPI_MODE	0 (Leading)	0 (Active High)
SPI_MODE	0 (Leading)	1 (Active Low)
SPI_MODE	1 (Trailing)	0 (Active High)
SPI_MODE	1 (Trailing)	1 (Active Low)

31.1 Shared resources

The SPI shares registers and other resources with other peripherals that have the same ID as the SPI. Therefore, the user must disable all peripherals that have the same ID as the SPI before the SPI can be configured and used.

Disabling a peripheral that has the same ID as the SPI will not reset any of the registers that are shared with the SPI. It is therefore important to configure all relevant SPI registers explicitly to secure that it operates correctly.

See the Instantiation table in *Instantiation* on page 21 for details on peripherals and their IDs.

31.2 EasyDMA

The SPI master implements EasyDMA for reading and writing of data packets from and to the DATA RAM without CPU involvement.

The RXD.PTR and TXD.PTR point to the RXD buffer (receive buffer) and TXD buffer (transmit buffer) respectively, see *Figure 68: SPIM — SPI master with EasyDMA* on page 277. RXD.MAXCNT and TXD.MAXCNT specify the maximum number of bytes allocated to the buffers.

The SPI master will automatically stop transmitting after TXD.MAXCNT bytes have been transmitted and RXD.MAXCNT bytes have been received. If TXD.MAXCNT is larger than RXD.MAXCNT, the superfluous received bytes will be ignored. If RXD.MAXCNT is larger than TXD.MAXCNT, the remaining transmitted bytes will contain the value defined in the ORC register.

If the RXD.PTR and the TXD.PTR are not pointing to the Data RAM region, an EasyDMA transfer may result in a HardFault or RAM corruption. See *Memory* on page 20 for more information about the different memory regions.

The .PTR and .MAXCNT registers are double-buffered. They can be updated and prepared for the next transmission immediately after having received the STARTED event.

The ENDRX/ENDTX event indicate that EasyDMA has finished accessing respectively the RX/TX buffer in RAM. The END event gets generated when both RX and TX are finished accessing the buffers in RAM.

31.2.1 EasyDMA list

EasyDMA supports one list type.

The supported list type is:

- Array list

EasyDMA array list

The EasyDMA array list can be represented by the data structure ArrayList_type.

For illustration, see the code example below. This data structure includes only a buffer with size equal to Channel.MAXCNT. EasyDMA will use the Channel.MAXCNT register to determine when the buffer is full. Replace 'Channel' by the specific data channel you want to use, for instance 'NRF_SPIM->RXD', 'NRF_SPIM->TXD', 'NRF_TWIM->RXD', etc.

The Channel.MAXCNT register cannot be specified larger than the actual size of the buffer. If Channel.MAXCNT is specified larger than the size of the buffer, the EasyDMA channel may overflow the buffer.

This array list does not provide a mechanism to explicitly specify where the next item in the list is located. Instead, it assumes that the list is organized as a linear array where items are located one after the other in RAM.

```
#define BUFFER_SIZE  4

typedef struct ArrayList
{
  uint8_t buffer[BUFFER_SIZE];
} ArrayList_type;

ArrayList_type MyArrayList[3];
```

```
//replace 'Channel' below by the specific data channel you want to use,
//         for instance 'NRF_SPIM->RXD', 'NRF_TWIM->RXD', etc.
Channel.MAXCNT = BUFFER_SIZE;
Channel.PTR = &MyArrayList;
```

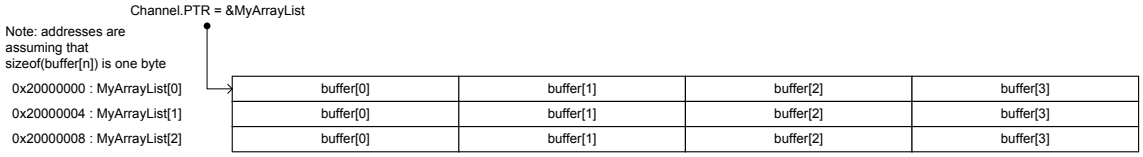

Figure 69: EasyDMA array list

31.3 SPI master transaction sequence

An SPI master transaction consists of a sequence started by the START task followed by a number of events, and finally the STOP task.

An SPI master transaction is started by triggering the START task. The ENDTX event will be generated when the transmitter has transmitted all bytes in the TXD buffer as specified in the TXD.MAXCNT register. The ENDRX event will be generated when the receiver has filled the RXD buffer, i.e. received the last possible byte as specified in the RXD.MAXCNT register.

Following a START task, the SPI master will generate an END event when both ENDRX and ENDTX have been generated.

The SPI master is stopped by triggering the STOP task. A STOPPED event is generated when the SPI master has stopped.

If the ENDRX event has not already been generated when the SPI master has come to a stop, the SPI master will generate the ENDRX event explicitly even though the RX buffer is not full.

If the ENDTX event has not already been generated when the SPI master has come to a stop, the SPI master will generate the ENDTX event explicitly even though all bytes in the TXD buffer, as specified in the TXD.MAXCNT register, have not been transmitted.

The SPI master is a synchronous interface, and for every byte that is sent, a different byte will be received at the same time; this is illustrated in *Figure 70: SPI master transaction* on page 280.

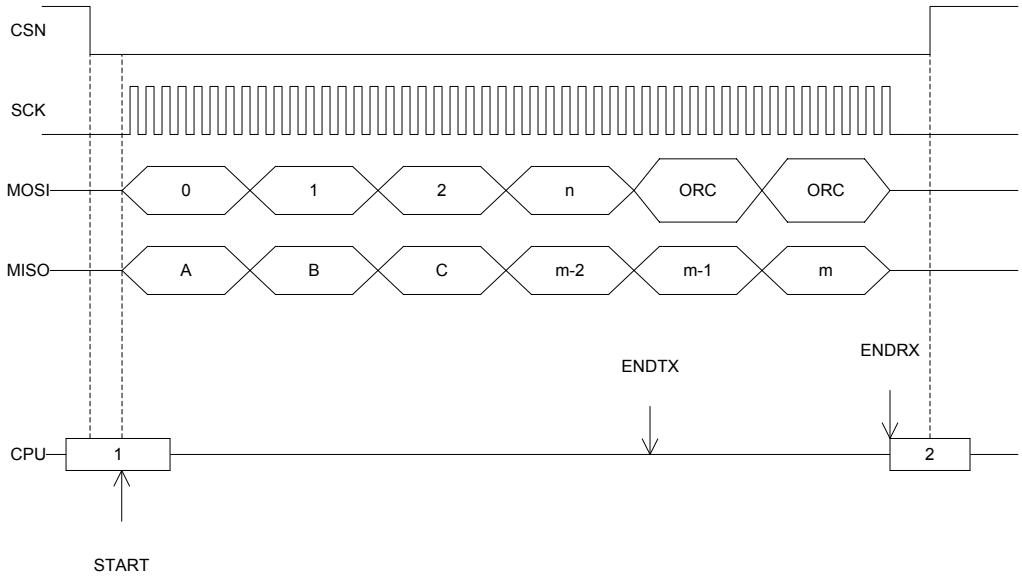

Figure 70: SPI master transaction

31.4 Low power

When putting the system in low power and the peripheral is not needed, lowest possible power consumption is achieved by stopping, and then disabling the peripheral.

The STOP task may not be always needed (the peripheral might already be stopped), but if it is sent, software shall wait until the STOPPED event was received as a response before disabling the peripheral through the ENABLE register.

31.5 Master mode pin configuration

The SCK, MOSI, and MISO signals associated with the SPI master are mapped to physical pins according to the configuration specified in the PSEL.SCK, PSEL.MOSI, and PSEL.MISO registers respectively.

The PSEL.SCK, PSEL.MOSI, and PSEL.MISO registers and their configurations are only used as long as the SPI master is enabled, and retained only as long as the device is in ON mode. PSEL.SCK, PSEL.MOSI and PSEL.MISO must only be configured when the SPI master is disabled.

To secure correct behavior in the SPI, the pins used by the SPI must be configured in the GPIO peripheral as described in *Table 62: GPIO configuration* on page 280 prior to enabling the SPI. The SCK must always be connected to a pin, and that pin's input buffer must always be connected for the SPI to work. This configuration must be retained in the GPIO for the selected IOs as long as the SPI is enabled.

Only one peripheral can be assigned to drive a particular GPIO pin at a time. Failing to do so may result in unpredictable behavior.

Table 62: GPIO configuration

SPI master signal	SPI master pin	Direction	Output value	Comments
SCK	As specified in PSEL.SCK	Output	Same as CONFIG.CPOL	
MOSI	As specified in PSEL.MOSI	Output	0	
MISO	As specified in PSEL.MISO	Input	Not applicable	

31.6 Registers

Table 63: Instances

Base address	Peripheral	Instance	Description	Configuration
0x40003000	SPIM	SPIM0	SPI master 0	
0x40004000	SPIM	SPIM1	SPI master 1	
0x40023000	SPIM	SPIM2	SPI master 2.	

Table 64: Register Overview

Register	Offset	Description
TASKS_START	0x010	Start SPI transaction
TASKS_STOP	0x014	Stop SPI transaction
TASKS_SUSPEND	0x01C	Suspend SPI transaction
TASKS_RESUME	0x020	Resume SPI transaction
EVENTS_STOPPED	0x104	SPI transaction has stopped
EVENTS_ENDRX	0x110	End of RXD buffer reached
EVENTS_END	0x118	End of RXD buffer and TXD buffer reached
EVENTS_ENDTX	0x120	End of TXD buffer reached
EVENTS_STARTED	0x14C	Transaction started
SHORTS	0x200	Shortcut register
INTENSET	0x304	Enable interrupt
INTENCLR	0x308	Disable interrupt
ENABLE	0x500	Enable SPIM
PSEL.SCK	0x508	Pin select for SCK
PSEL.MOSI	0x50C	Pin select for MOSI signal
PSEL.MISO	0x510	Pin select for MISO signal
FREQUENCY	0x524	SPI frequency
RXD.PTR	0x534	Data pointer
RXD.MAXCNT	0x538	Maximum number of bytes in receive buffer
RXD.AMOUNT	0x53C	Number of bytes transferred in the last transaction
RXD.LIST	0x540	EasyDMA list type
TXD.PTR	0x544	Data pointer
TXD.MAXCNT	0x548	Maximum number of bytes in transmit buffer
TXD.AMOUNT	0x54C	Number of bytes transferred in the last transaction
TXD.LIST	0x550	EasyDMA list type
CONFIG	0x554	Configuration register
ORC	0x5C0	Over-read character. Character clocked out in case and over-read of the TXD buffer.

31.6.1 SHORTS

Address offset: 0x200

Shortcut register

Bit number	31	30	29	28	27	26	25	24	23	22	21	20	19	18	17	16	15	14	13	12	11	10	9	8	7	6	5	4	3	2	1	0
Id															A																	
Reset 0x00000000	**0**	**0**	**0**	**0**	**0**	**0**	**0**	**0**	**0**	**0**	**0**	**0**	**0**	**0**	**0**	**0**	**0**	**0**	**0**	**0**	**0**	**0**	**0**	**0**	**0**	**0**	**0**	**0**	**0**	**0**	**0**	**0**

Id	RW	Field	Value Id	Value	Description
A	RW	END_START			Shortcut between END event and START task See *EVENTS_END* and *TASKS_START*
			Disabled	0	Disable shortcut
			Enabled	1	Enable shortcut

31.6.2 INTENSET

Address offset: 0x304

Enable interrupt

Bit number				31	30	29	28	27	26	25	24	23	22	21	20	19	18	17	16	15	14	13	12	11	10	9	8	7	6	5	4	3	2	1	0
Id																E											D		C		B			A	
Reset 0x00000000				**0**	**0**	**0**	**0**	**0**	**0**	**0**	**0**	**0**	**0**	**0**	**0**	**0**	**0**	**0**	**0**	**0**	**0**	**0**	**0**	**0**	**0**	**0**	**0**	**0**	**0**	**0**	**0**	**0**	**0**	**0**	**0**
Id	**RW**	**Field**	**Value Id**	**Value**												**Description**																					
A	RW	STOPPED														Write '1' to Enable interrupt for STOPPED event See *EVENTS_STOPPED*																					
			Set	1												Enable																			
			Disabled	0												Read: Disabled																			
			Enabled	1												Read: Enabled																			
B	RW	ENDRX														Write '1' to Enable interrupt for ENDRX event See *EVENTS_ENDRX*																					
			Set	1												Enable																			
			Disabled	0												Read: Disabled																			
			Enabled	1												Read: Enabled																			
C	RW	END														Write '1' to Enable interrupt for END event See *EVENTS_END*																					
			Set	1												Enable																			
			Disabled	0												Read: Disabled																			
			Enabled	1												Read: Enabled																			
D	RW	ENDTX														Write '1' to Enable interrupt for ENDTX event See *EVENTS_ENDTX*																					
			Set	1												Enable																			
			Disabled	0												Read: Disabled																			
			Enabled	1												Read: Enabled																			
E	RW	STARTED														Write '1' to Enable interrupt for STARTED event See *EVENTS_STARTED*																					
			Set	1												Enable																			
			Disabled	0												Read: Disabled																			
			Enabled	1												Read: Enabled																			

31.6.3 INTENCLR

Address offset: 0x308

Disable interrupt

Bit number				31	30	29	28	27	26	25	24	23	22	21	20	19	18	17	16	15	14	13	12	11	10	9	8	7	6	5	4	3	2	1	0
Id																E											D		C		B			A	
Reset 0x00000000				**0**	**0**	**0**	**0**	**0**	**0**	**0**	**0**	**0**	**0**	**0**	**0**	**0**	**0**	**0**	**0**	**0**	**0**	**0**	**0**	**0**	**0**	**0**	**0**	**0**	**0**	**0**	**0**	**0**	**0**	**0**	**0**
Id	**RW**	**Field**	**Value Id**	**Value**												**Description**																					
A	RW	STOPPED														Write '1' to Disable interrupt for STOPPED event See *EVENTS_STOPPED*																					
			Clear	1												Disable																			
			Disabled	0												Read: Disabled																			
			Enabled	1												Read: Enabled																			
B	RW	ENDRX														Write '1' to Disable interrupt for ENDRX event See *EVENTS_ENDRX*																					
			Clear	1												Disable																			
			Disabled	0												Read: Disabled																			
			Enabled	1												Read: Enabled																			
C	RW	END														Write '1' to Disable interrupt for END event See *EVENTS_END*																					
			Clear	1												Disable																			
			Disabled	0												Read: Disabled																			
			Enabled	1												Read: Enabled																			
D	RW	ENDTX														Write '1' to Disable interrupt for ENDTX event See *EVENTS_ENDTX*																					

Bit number				31	30	29	28	27	26	25	24	23	22	21	20	19	18	17	16	15	14	13	12	11	10	9	8	7	6	5	4	3	2	1	0
Id																E											D		C		B			A	
Reset 0x00000000				**0**	**0**	**0**	**0**	**0**	**0**	**0**	**0**	**0**	**0**	**0**	**0**	**0**	**0**	**0**	**0**	**0**	**0**	**0**	**0**	**0**	**0**	**0**	**0**	**0**	**0**	**0**	**0**	**0**	**0**	**0**	**0**
Id	**RW**	**Field**	**Value Id**	**Value**												**Description**																					
			Clear	1												Disable																			
			Disabled	0												Read: Disabled																			
			Enabled	1												Read: Enabled																			
E	RW	STARTED														Write '1' to Disable interrupt for STARTED event See *EVENTS_STARTED*																			
			Clear	1												Disable																			
			Disabled	0												Read: Disabled																			
			Enabled	1												Read: Enabled																			

31.6.4 ENABLE

Address offset: 0x500

Enable SPIM

Bit number				31	30	29	28	27	26	25	24	23	22	21	20	19	18	17	16	15	14	13	12	11	10	9	8	7	6	5	4	3	2	1	0
Id																																A	A	A	A
Reset 0x00000000				**0**	**0**	**0**	**0**	**0**	**0**	**0**	**0**	**0**	**0**	**0**	**0**	**0**	**0**	**0**	**0**	**0**	**0**	**0**	**0**	**0**	**0**	**0**	**0**	**0**	**0**	**0**	**0**	**0**	**0**	**0**	**0**
Id	**RW**	**Field**	**Value Id**	**Value**												**Description**																					
A	RW	ENABLE														Enable or disable SPIM																					
			Disabled	0												Disable SPIM																			
			Enabled	7												Enable SPIM																			

31.6.5 PSEL.SCK

Address offset: 0x508

Pin select for SCK

Bit number				31	30	29	28	27	26	25	24	23	22	21	20	19	18	17	16	15	14	13	12	11	10	9	8	7	6	5	4	3	2	1	0
Id				C																											A	A	A	A	A
Reset 0xFFFFFFFF				**1**	**1**	**1**	**1**	**1**	**1**	**1**	**1**	**1**	**1**	**1**	**1**	**1**	**1**	**1**	**1**	**1**	**1**	**1**	**1**	**1**	**1**	**1**	**1**	**1**	**1**	**1**	**1**	**1**	**1**	**1**	**1**
Id	**RW**	**Field**	**Value Id**	**Value**												**Description**																					
A	RW	PIN		[0..31]												Pin number																					
C	RW	CONNECT														Connection																					
			Disconnected	1												Disconnect																			
			Connected	0												Connect																			

31.6.6 PSEL.MOSI

Address offset: 0x50C

Pin select for MOSI signal

Bit number				31	30	29	28	27	26	25	24	23	22	21	20	19	18	17	16	15	14	13	12	11	10	9	8	7	6	5	4	3	2	1	0
Id				C																											A	A	A	A	A
Reset 0xFFFFFFFF				**1**	**1**	**1**	**1**	**1**	**1**	**1**	**1**	**1**	**1**	**1**	**1**	**1**	**1**	**1**	**1**	**1**	**1**	**1**	**1**	**1**	**1**	**1**	**1**	**1**	**1**	**1**	**1**	**1**	**1**	**1**	**1**
Id	**RW**	**Field**	**Value Id**	**Value**												**Description**																					
A	RW	PIN		[0..31]												Pin number																					
C	RW	CONNECT														Connection																					
			Disconnected	1												Disconnect																			
			Connected	0												Connect																			

31.6.7 PSEL.MISO

Address offset: 0x510

Pin select for MISO signal

Bit number				31	30	29	28	27	26	25	24	23	22	21	20	19	18	17	16	15	14	13	12	11	10	9	8	7	6	5	4	3	2	1	0
Id				C																											A	A	A	A	A
Reset 0xFFFFFFFF				**1**	**1**	**1**	**1**	**1**	**1**	**1**	**1**	**1**	**1**	**1**	**1**	**1**	**1**	**1**	**1**	**1**	**1**	**1**	**1**	**1**	**1**	**1**	**1**	**1**	**1**	**1**	**1**	**1**	**1**	**1**	**1**
Id	**RW**	**Field**	**Value Id**	**Value**								**Description**																							
A	RW	PIN		[0..31]								Pin number																							
C	RW	CONNECT										Connection																							
			Disconnected	1								Disconnect																							
			Connected	0								Connect																							

31.6.8 FREQUENCY

Address offset: 0x524

SPI frequency

Bit number				31	30	29	28	27	26	25	24	23	22	21	20	19	18	17	16	15	14	13	12	11	10	9	8	7	6	5	4	3	2	1	0
Id				A	A	A	A	A	A	A	A	A	A	A	A	A	A	A	A	A	A	A	A	A	A	A	A	A	A	A	A	A	A	A	A
Reset 0x04000000				**0**	**0**	**0**	**0**	**0**	**1**	**0**	**0**	**0**	**0**	**0**	**0**	**0**	**0**	**0**	**0**	**0**	**0**	**0**	**0**	**0**	**0**	**0**	**0**	**0**	**0**	**0**	**0**	**0**	**0**	**0**	**0**
Id	**RW**	**Field**	**Value Id**	**Value**								**Description**																							
A	RW	FREQUENCY										SPI master data rate																							
			K125	0x02000000								125 kbps																							
			K250	0x04000000								250 kbps																							
			K500	0x08000000								500 kbps																							
			M1	0x10000000								1 Mbps																							
			M2	0x20000000								2 Mbps																							
			M4	0x40000000								4 Mbps																							
			M8	0x80000000								8 Mbps																							

31.6.9 RXD.PTR

Address offset: 0x534

Data pointer

Bit number				31	30	29	28	27	26	25	24	23	22	21	20	19	18	17	16	15	14	13	12	11	10	9	8	7	6	5	4	3	2	1	0
Id				A	A	A	A	A	A	A	A	A	A	A	A	A	A	A	A	A	A	A	A	A	A	A	A	A	A	A	A	A	A	A	A
Reset 0x00000000				**0**	**0**	**0**	**0**	**0**	**0**	**0**	**0**	**0**	**0**	**0**	**0**	**0**	**0**	**0**	**0**	**0**	**0**	**0**	**0**	**0**	**0**	**0**	**0**	**0**	**0**	**0**	**0**	**0**	**0**	**0**	**0**
Id	**RW**	**Field**	**Value Id**	**Value**								**Description**																							
A	RW	PTR										Data pointer																							

31.6.10 RXD.MAXCNT

Address offset: 0x538

Maximum number of bytes in receive buffer

Bit number				31	30	29	28	27	26	25	24	23	22	21	20	19	18	17	16	15	14	13	12	11	10	9	8	7	6	5	4	3	2	1	0
Id																												A	A	A	A	A	A	A	A
Reset 0x00000000				**0**	**0**	**0**	**0**	**0**	**0**	**0**	**0**	**0**	**0**	**0**	**0**	**0**	**0**	**0**	**0**	**0**	**0**	**0**	**0**	**0**	**0**	**0**	**0**	**0**	**0**	**0**	**0**	**0**	**0**	**0**	**0**
Id	**RW**	**Field**	**Value Id**	**Value**								**Description**																							
A	RW	MAXCNT										Maximum number of bytes in receive buffer																							

31.6.11 RXD.AMOUNT

Address offset: 0x53C

Number of bytes transferred in the last transaction

Bit number				31	30	29	28	27	26	25	24	23	22	21	20	19	18	17	16	15	14	13	12	11	10	9	8	7	6	5	4	3	2	1	0
Id																												A	A	A	A	A	A	A	A
Reset 0x00000000				**0**	**0**	**0**	**0**	**0**	**0**	**0**	**0**	**0**	**0**	**0**	**0**	**0**	**0**	**0**	**0**	**0**	**0**	**0**	**0**	**0**	**0**	**0**	**0**	**0**	**0**	**0**	**0**	**0**	**0**	**0**	**0**
Id	**RW**	**Field**	**Value Id**	**Value**								**Description**																							
A	R	AMOUNT										Number of bytes transferred in the last transaction																							

31.6.12 RXD.LIST

Address offset: 0x540

EasyDMA list type

Bit number	31	30	29	28	27	26	25	24	23	22	21	20	19	18	17	16	15	14	13	12	11	10	9	8	7	6	5	4	3	2	1	0
Id																														A	A	A
Reset 0x00000000	**0**	**0**	**0**	**0**	**0**	**0**	**0**	**0**	**0**	**0**	**0**	**0**	**0**	**0**	**0**	**0**	**0**	**0**	**0**	**0**	**0**	**0**	**0**	**0**	**0**	**0**	**0**	**0**	**0**	**0**	**0**	**0**

Id	RW	Field	Value Id	Value	Description
A	RW	LIST			List type
			Disabled	0	Disable EasyDMA list
			ArrayList	1	Use array list

31.6.13 TXD.PTR

Address offset: 0x544

Data pointer

Bit number	31	30	29	28	27	26	25	24	23	22	21	20	19	18	17	16	15	14	13	12	11	10	9	8	7	6	5	4	3	2	1	0
Id	A	A	A	A	A	A	A	A	A	A	A	A	A	A	A	A	A	A	A	A	A	A	A	A	A	A	A	A	A	A	A	A
Reset 0x00000000	**0**	**0**	**0**	**0**	**0**	**0**	**0**	**0**	**0**	**0**	**0**	**0**	**0**	**0**	**0**	**0**	**0**	**0**	**0**	**0**	**0**	**0**	**0**	**0**	**0**	**0**	**0**	**0**	**0**	**0**	**0**	**0**

Id	RW	Field	Value Id	Value	Description
A	RW	PTR			Data pointer

31.6.14 TXD.MAXCNT

Address offset: 0x548

Maximum number of bytes in transmit buffer

Bit number	31	30	29	28	27	26	25	24	23	22	21	20	19	18	17	16	15	14	13	12	11	10	9	8	7	6	5	4	3	2	1	0
Id																									A	A	A	A	A	A	A	A
Reset 0x00000000	**0**	**0**	**0**	**0**	**0**	**0**	**0**	**0**	**0**	**0**	**0**	**0**	**0**	**0**	**0**	**0**	**0**	**0**	**0**	**0**	**0**	**0**	**0**	**0**	**0**	**0**	**0**	**0**	**0**	**0**	**0**	**0**

Id	RW	Field	Value Id	Value	Description
A	RW	MAXCNT			Maximum number of bytes in transmit buffer

31.6.15 TXD.AMOUNT

Address offset: 0x54C

Number of bytes transferred in the last transaction

Bit number	31	30	29	28	27	26	25	24	23	22	21	20	19	18	17	16	15	14	13	12	11	10	9	8	7	6	5	4	3	2	1	0
Id																									A	A	A	A	A	A	A	A
Reset 0x00000000	**0**	**0**	**0**	**0**	**0**	**0**	**0**	**0**	**0**	**0**	**0**	**0**	**0**	**0**	**0**	**0**	**0**	**0**	**0**	**0**	**0**	**0**	**0**	**0**	**0**	**0**	**0**	**0**	**0**	**0**	**0**	**0**

Id	RW	Field	Value Id	Value	Description
A	R	AMOUNT			Number of bytes transferred in the last transaction

31.6.16 TXD.LIST

Address offset: 0x550

EasyDMA list type

Bit number	31	30	29	28	27	26	25	24	23	22	21	20	19	18	17	16	15	14	13	12	11	10	9	8	7	6	5	4	3	2	1	0
Id																														A	A	A
Reset 0x00000000	**0**	**0**	**0**	**0**	**0**	**0**	**0**	**0**	**0**	**0**	**0**	**0**	**0**	**0**	**0**	**0**	**0**	**0**	**0**	**0**	**0**	**0**	**0**	**0**	**0**	**0**	**0**	**0**	**0**	**0**	**0**	**0**

Id	RW	Field	Value Id	Value	Description
A	RW	LIST			List type
			Disabled	0	Disable EasyDMA list
			ArrayList	1	Use array list

31.6.17 CONFIG

Address offset: 0x554

Configuration register

Bit number	31	30	29	28	27	26	25	24	23	22	21	20	19	18	17	16	15	14	13	12	11	10	9	8	7	6	5	4	3	2	1	0
Id																														C	B	A
Reset 0x00000000	**0**	**0**	**0**	**0**	**0**	**0**	**0**	**0**	**0**	**0**	**0**	**0**	**0**	**0**	**0**	**0**	**0**	**0**	**0**	**0**	**0**	**0**	**0**	**0**	**0**	**0**	**0**	**0**	**0**	**0**	**0**	**0**

Id	RW	Field	Value Id	Value	Description
A	RW	ORDER			Bit order
			MsbFirst	0	Most significant bit shifted out first
			LsbFirst	1	Least significant bit shifted out first
B	RW	CPHA			Serial clock (SCK) phase
			Leading	0	Sample on leading edge of clock, shift serial data on trailing edge
			Trailing	1	Sample on trailing edge of clock, shift serial data on leading edge
C	RW	CPOL			Serial clock (SCK) polarity
			ActiveHigh	0	Active high
			ActiveLow	1	Active low

31.6.18 ORC

Address offset: 0x5C0

Over-read character. Character clocked out in case and over-read of the TXD buffer.

Bit number	31	30	29	28	27	26	25	24	23	22	21	20	19	18	17	16	15	14	13	12	11	10	9	8	7	6	5	4	3	2	1	0
Id																									A	A	A	A	A	A	A	A
Reset 0x00000000	**0**	**0**	**0**	**0**	**0**	**0**	**0**	**0**	**0**	**0**	**0**	**0**	**0**	**0**	**0**	**0**	**0**	**0**	**0**	**0**	**0**	**0**	**0**	**0**	**0**	**0**	**0**	**0**	**0**	**0**	**0**	**0**

Id	RW	Field	Value Id	Value	Description
A	RW	ORC			Over-read character. Character clocked out in case and over-read of the TXD buffer.

31.7 Electrical Specification

31.7.1 SPIM master interface

Symbol	Description	Min.	Typ.	Max.	Units
f_{SPIM}	Bit rates for SPIM[24]			8[25]	Mbps
$I_{SPIM,2Mbps}$	Run current for SPIM, 2 Mbps		50		µA
$I_{SPIM,8Mbps}$	Run current for SPIM, 8 Mbps		50		µA
$I_{SPIM,IDLE}$	Idle current for SPIM (STARTed, no CSN activity)		1		µA
$t_{SPIM,START,LP}$	Time from START task to transmission started, low power mode		$t_{SPIM,START,}$ + t_{START_HFIN}		µs
$t_{SPIM,START,CL}$	Time from START task to transmission started, constant latency mode		1		µs

31.7.2 Serial Peripheral Interface Master (SPIM) electrical specifications

Symbol	Description	Min.	Typ.	Max.	Units
$t_{SPIM,CSCK,8Mbps}$	SCK period at 8Mbps		125		ns
$t_{SPIM,CSCK,4Mbps}$	SCK period at 4Mbps		250		ns
$t_{SPIM,CSCK,2Mbps}$	SCK period at 2Mbps		500		ns

[24] Higher bit rates may require GPIOs to be set as High Drive, see GPIO chapter for more details.

[25] The actual maximum data rate depends on the slave's CLK to MISO and MOSI setup and hold timings.

Symbol	Description	Min.	Typ.	Max.	Units
$t_{SPIM,RSCK,LD}$	SCK rise time, low drive[a]			$t_{RF,25pF}$	
$t_{SPIM,RSCK,HD}$	SCK rise time, high drive[a]			$t_{HRF,25pF}$	
$t_{SPIM,FSCK,LD}$	SCK fall time, low drive[a]			$t_{RF,25pF}$	
$t_{SPIM,FSCK,HD}$	SCK fall time, high drive[a]			$t_{HRF,25pF}$	
$t_{SPIM,WHSCK}$	SCK high time[a]	$(0.5*t_{CSCK})$ – t_{RSCK}			
$t_{SPIM,WLSCK}$	SCK low time[a]	$(0.5*t_{CSCK})$ – t_{FSCK}			
$t_{SPIM,SUMI}$	MISO to CLK edge setup time	19			ns
$t_{SPIM,HMI}$	CLK edge to MISO hold time	18			ns
$t_{SPIM,VMO}$	CLK edge to MOSI valid			59	ns
$t_{SPIM,HMO}$	MOSI hold time after CLK edge	20			ns

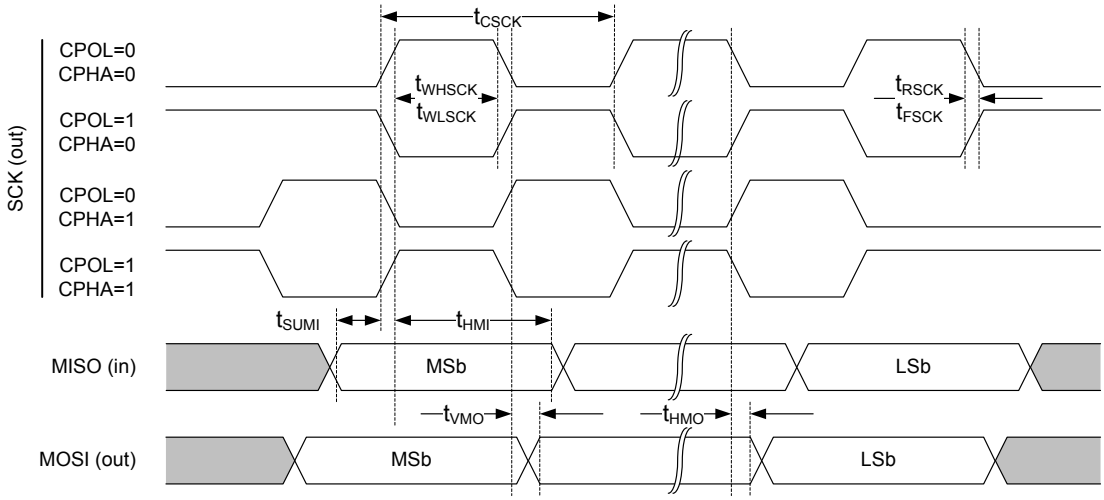

Figure 71: SPIM timing diagram

[a] At 25pF load, including GPIO pin capacitance, see GPIO spec.

32 SPIS — Serial peripheral interface slave with EasyDMA

SPI slave (SPIS) is implemented with EasyDMA support for ultra low power serial communication from an external SPI master. EasyDMA in conjunction with hardware-based semaphore mechanisms removes all real-time requirements associated with controlling the SPI slave from a low priority CPU execution context.

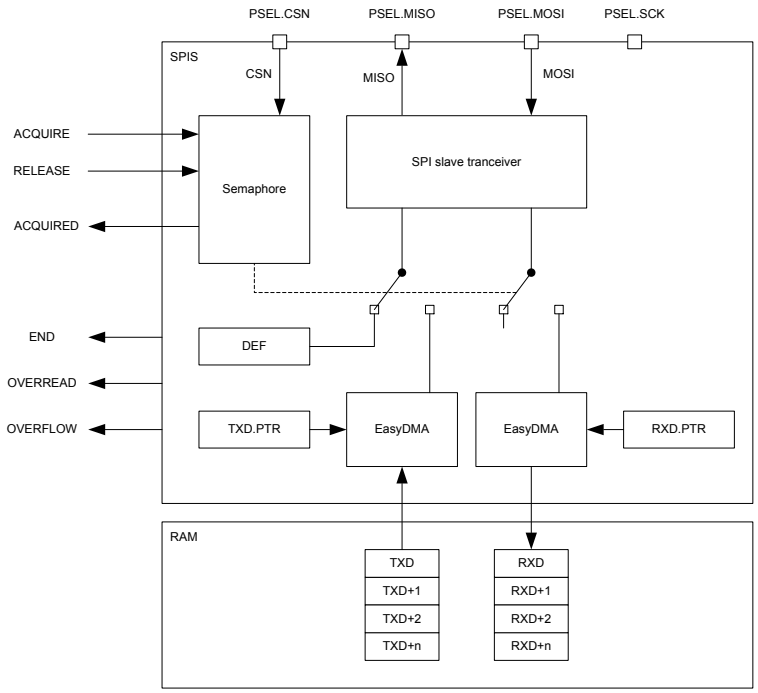

Figure 72: SPI slave

The SPIS supports SPI modes 0 through 3. The CONFIG register allows setting CPOL and CPHA appropriately.

Table 65: SPI modes

Mode	Clock polarity CPOL	Clock phase CPHA
SPI_MODE0	0 (Leading)	0 (Active High)
SPI_MODE1	0 (Leading)	1 (Active Low)
SPI_MODE2	1 (Trailing)	0 (Active High)
SPI_MODE3	1 (Trailing)	1 (Active Low)

32.1 Shared resources

The SPI slave shares registers and other resources with other peripherals that have the same ID as the SPI slave. Therefore, you must disable all peripherals that have the same ID as the SPI slave before the SPI slave can be configured and used.

Disabling a peripheral that has the same ID as the SPI slave will not reset any of the registers that are shared with the SPI slave. It is important to configure all relevant SPI slave registers explicitly to secure that it operates correctly.

The Instantiation table in *Instantiation* on page 21 shows which peripherals have the same ID as the SPI slave.

32.2 EasyDMA

The SPI slave implements EasyDMA for reading and writing to and from the RAM. The END event indicates that EasyDMA has finished accessing the buffer in RAM.

If the TXD.PTR and the RXD.PTR are not pointing to the Data RAM region, an EasyDMA transfer may result in a HardFault or RAM corruption. See *Memory* on page 20 for more information about the different memory regions.

32.3 SPI slave operation

SPI slave uses two memory pointers, RXD.PTR and TXD.PTR, that point to the RXD buffer (receive buffer) and TXD buffer (transmit buffer) respectively. Since these buffers are located in RAM, which can be accessed by both the SPI slave and the CPU, a hardware based semaphore mechanism is implemented to enable safe sharing.

See *Figure 73: SPI transaction when shortcut between END and ACQUIRE is enabled* on page 290.

Before the CPU can safely update the RXD.PTR and TXD.PTR pointers it must first acquire the SPI semaphore. The CPU can acquire the semaphore by triggering the ACQUIRE task and then receiving the ACQUIRED event. When the CPU has updated the RXD.PTR and TXD.PTR pointers the CPU must release the semaphore before the SPI slave will be able to acquire it. The CPU releases the semaphore by triggering the RELEASE task. This is illustrated in *Figure 73: SPI transaction when shortcut between END and ACQUIRE is enabled* on page 290. Triggering the RELEASE task when the semaphore is not granted to the CPU will have no effect.

The semaphore mechanism does not, at any time, prevent the CPU from performing read or write access to the RXD.PTR register, the TXD.PTR registers, or the RAM that these pointers are pointing to. The semaphore is only telling when these can be updated by the CPU so that safe sharing is achieved.

The semaphore is by default assigned to the CPU after the SPI slave is enabled. No ACQUIRED event will be generated for this initial semaphore handover. An ACQUIRED event will be generated immediately if the ACQUIRE task is triggered while the semaphore is assigned to the CPU.

The SPI slave will try to acquire the semaphore when CSN goes low. If the SPI slave does not manage to acquire the semaphore at this point, the transaction will be ignored. This means that all incoming data on MOSI will be discarded, and the DEF (default) character will be clocked out on the MISO line throughout the whole transaction. This will also be the case even if the semaphore is released by the CPU during the transaction. In case of a race condition where the CPU and the SPI slave try to acquire the semaphore at the same time, as illustrated in lifeline item 2 in *Figure 73: SPI transaction when shortcut between END and ACQUIRE is enabled* on page 290, the semaphore will be granted to the CPU.

If the SPI slave acquires the semaphore, the transaction will be granted. The incoming data on MOSI will be stored in the RXD buffer and the data in the TXD buffer will be clocked out on MISO.

When a granted transaction is completed and CSN goes high, the SPI slave will automatically release the semaphore and generate the END event.

As long as the semaphore is available the SPI slave can be granted multiple transactions one after the other. If the CPU is not able to reconfigure the TXD.PTR and RXD.PTR between granted transactions, the same TX data will be clocked out and the RX buffers will be overwritten. To prevent this from happening, the END_ACQUIRE shortcut can be used. With this shortcut enabled the semaphore will be handed over to the CPU automatically after the granted transaction has completed, giving the CPU the ability to update the TXPTR and RXPTR between every granted transaction.

If the CPU tries to acquire the semaphore while it is assigned to the SPI slave, an immediate handover will not be granted. However, the semaphore will be handed over to the CPU as soon as the SPI slave has released the semaphore after the granted transaction is completed. If the END_ACQUIRE shortcut is enabled and the CPU has triggered the ACQUIRE task during a granted transaction, only one ACQUIRE request will be served following the END event.

The MAXRX register specifies the maximum number of bytes the SPI slave can receive in one granted transaction. If the SPI slave receives more than MAXRX number of bytes, an OVERFLOW will be indicated in the STATUS register and the incoming bytes will be discarded.

The MAXTX parameter specifies the maximum number of bytes the SPI slave can transmit in one granted transaction. If the SPI slave is forced to transmit more than MAXTX number of bytes, an OVERREAD will be indicated in the STATUS register and the ORC character will be clocked out.

The RXD.AMOUNT and TXD.AMOUNT registers are updated when a granted transaction is completed. The TXD.AMOUNT register indicates how many bytes were read from the TX buffer in the last transaction, that is, ORC (over-read) characters are not included in this number. Similarly, the RXD.AMOUNT register indicates how many bytes were written into the RX buffer in the last transaction.

The ENDRX event is generated when the RX buffer has been filled.

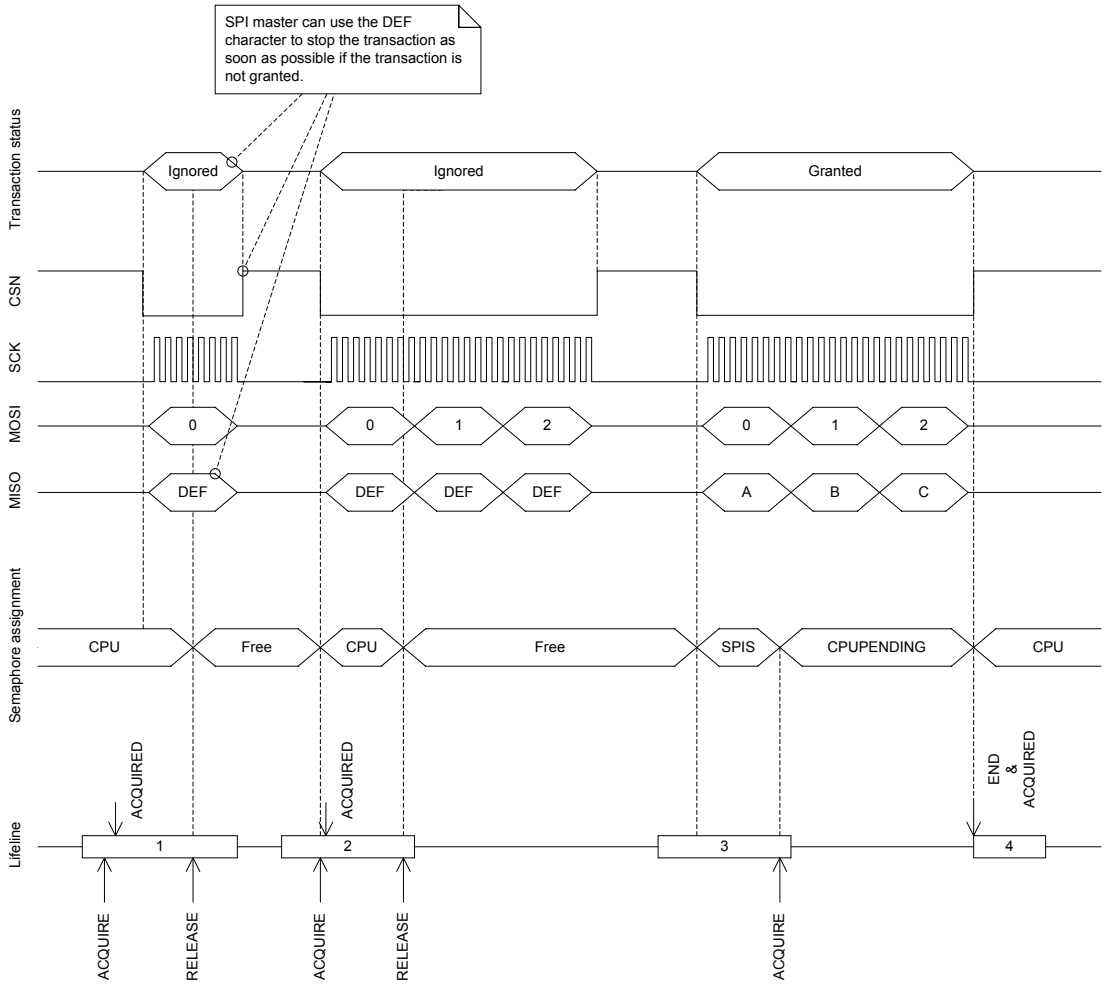

Figure 73: SPI transaction when shortcut between END and ACQUIRE is enabled

32.4 Slave mode pin configuration

The CSN, SCK, MOSI, and MISO signals associated with the SPI slave are mapped to physical pins according to the configuration specified in the PSEL.CSN, PSEL.SCK, PSEL.MOSI, and PSEL.MISO registers respectively. If the CONNECT field of any of these registers is set to Disconnected, the associated SPI slave signal will not be connected to any physical pins.

The PSEL.CSN, PSEL.SCK, PSEL.MOSI, and PSEL.MISO registers and their configurations are only used as long as the SPI slave is enabled, and retained only as long as the device is in System ON mode, see *POWER* chapter for more information about power modes. When the peripheral is disabled, the pins will behave as regular GPIOs, and use the configuration in their respective OUT bit field and PIN_CNF[n]

register. PSEL.CSN, PSEL.SCK, PSEL.MOSI, and PSEL.MISO must only be configured when the SPI slave is disabled.

To secure correct behavior in the SPI slave, the pins used by the SPI slave must be configured in the GPIO peripheral as described in *Table 66: GPIO configuration before enabling peripheral* on page 291 before enabling the SPI slave. This is to secure that the pins used by the SPI slave are driven correctly if the SPI slave itself is temporarily disabled, or if the device temporarily enters System OFF. This configuration must be retained in the GPIO for the selected I/Os as long as the SPI slave is to be recognized by an external SPI master.

The MISO line is set in high impedance as long as the SPI slave is not selected with CSN.

Only one peripheral can be assigned to drive a particular GPIO pin at a time. Failing to do so may result in unpredictable behavior.

Table 66: GPIO configuration before enabling peripheral

SPI signal	SPI pin	Direction	Output value	Comment
CSN	As specified in PSEL.CSN	Input	Not applicable	
SCK	As specified in PSEL.SCK	Input	Not applicable	
MOSI	As specified in PSEL.MOSI	Input	Not applicable	
MISO	As specified in PSEL.MISO	Input	Not applicable	Emulates that the SPI slave is not selected.

32.5 Registers

Table 67: Instances

Base address	Peripheral	Instance	Description	Configuration
0x40003000	SPIS	SPIS0	SPI slave 0.	
0x40004000	SPIS	SPIS1	SPI slave 1	
0x40023000	SPIS	SPIS2	SPI slave 2.	

Table 68: Register Overview

Register	Offset	Description	
TASKS_ACQUIRE	0x024	Acquire SPI semaphore	
TASKS_RELEASE	0x028	Release SPI semaphore, enabling the SPI slave to acquire it	
EVENTS_END	0x104	Granted transaction completed	
EVENTS_ENDRX	0x110	End of RXD buffer reached	
EVENTS_ACQUIRED	0x128	Semaphore acquired	
SHORTS	0x200	Shortcut register	
INTENSET	0x304	Enable interrupt	
INTENCLR	0x308	Disable interrupt	
SEMSTAT	0x400	Semaphore status register	
STATUS	0x440	Status from last transaction	
ENABLE	0x500	Enable SPI slave	
PSELSCK	0x508	Pin select for SCK	Deprecated
PSELMISO	0x50C	Pin select for MISO	Deprecated
PSELMOSI	0x510	Pin select for MOSI	Deprecated
PSELCSN	0x514	Pin select for CSN	Deprecated
PSEL.SCK	0x508	Pin select for SCK	
PSEL.MISO	0x50C	Pin select for MISO signal	
PSEL.MOSI	0x510	Pin select for MOSI signal	
PSEL.CSN	0x514	Pin select for CSN signal	
RXDPTR	0x534	RXD data pointer	Deprecated
MAXRX	0x538	Maximum number of bytes in receive buffer	Deprecated
AMOUNTRX	0x53C	Number of bytes received in last granted transaction	Deprecated
RXD.PTR	0x534	RXD data pointer	
RXD.MAXCNT	0x538	Maximum number of bytes in receive buffer	
RXD.AMOUNT	0x53C	Number of bytes received in last granted transaction	
TXDPTR	0x544	TXD data pointer	Deprecated

Register	Offset	Description	
MAXTX	0x548	Maximum number of bytes in transmit buffer	Deprecated
AMOUNTTX	0x54C	Number of bytes transmitted in last granted transaction	Deprecated
TXD.PTR	0x544	TXD data pointer	
TXD.MAXCNT	0x548	Maximum number of bytes in transmit buffer	
TXD.AMOUNT	0x54C	Number of bytes transmitted in last granted transaction	
CONFIG	0x554	Configuration register	
DEF	0x55C	Default character. Character clocked out in case of an ignored transaction.	
ORC	0x5C0	Over-read character	

32.5.1 SHORTS

Address offset: 0x200

Shortcut register

Bit number				31	30	29	28	27	26	25	24	23	22	21	20	19	18	17	16	15	14	13	12	11	10	9	8	7	6	5	4	3	2	1	0
Id																																	A		
Reset 0x00000000				**0**	**0**	**0**	**0**	**0**	**0**	**0**	**0**	**0**	**0**	**0**	**0**	**0**	**0**	**0**	**0**	**0**	**0**	**0**	**0**	**0**	**0**	**0**	**0**	**0**	**0**	**0**	**0**	**0**	**0**	**0**	**0**
Id	**RW**	**Field**	**Value Id**	**Value**																															
A	RW	END_ACQUIRE																																	
			Disabled	0																															
			Enabled	1																															

	Shortcut between END event and ACQUIRE task
	See *EVENTS_END* and *TASKS_ACQUIRE*
Disable shortcut	
Enable shortcut	

32.5.2 INTENSET

Address offset: 0x304

Enable interrupt

Bit number				31	30	29	28	27	26	25	24	23	22	21	20	19	18	17	16	15	14	13	12	11	10	9	8	7	6	5	4	3	2	1	0
Id																									C						B			A	
Reset 0x00000000				**0**	**0**	**0**	**0**	**0**	**0**	**0**	**0**	**0**	**0**	**0**	**0**	**0**	**0**	**0**	**0**	**0**	**0**	**0**	**0**	**0**	**0**	**0**	**0**	**0**	**0**	**0**	**0**	**0**	**0**	**0**	**0**
Id	**RW**	**Field**	**Value Id**	**Value**																															
A	RW	END																																	
			Set	1																															
			Disabled	0																															
			Enabled	1																															
B	RW	ENDRX																																	
			Set	1																															
			Disabled	0																															
			Enabled	1																															
C	RW	ACQUIRED																																	
			Set	1																															
			Disabled	0																															
			Enabled	1																															

	Write '1' to Enable interrupt for END event
	See *EVENTS_END*
Enable	
Read: Disabled	
Read: Enabled	
	Write '1' to Enable interrupt for ENDRX event
	See *EVENTS_ENDRX*
Enable	
Read: Disabled	
Read: Enabled	
	Write '1' to Enable interrupt for ACQUIRED event
	See *EVENTS_ACQUIRED*
Enable	
Read: Disabled	
Read: Enabled	

32.5.3 INTENCLR

Address offset: 0x308

Disable interrupt

Bit number				31	30	29	28	27	26	25	24	23	22	21	20	19	18	17	16	15	14	13	12	11	10	9	8	7	6	5	4	3	2	1	0
Id																									C						B			A	
Reset 0x00000000				**0**	**0**	**0**	**0**	**0**	**0**	**0**	**0**	**0**	**0**	**0**	**0**	**0**	**0**	**0**	**0**	**0**	**0**	**0**	**0**	**0**	**0**	**0**	**0**	**0**	**0**	**0**	**0**	**0**	**0**	**0**	**0**
Id	**RW**	**Field**	**Value Id**	**Value**																															
A	RW	END																																	
			Clear	1																															
			Disabled	0																															
			Enabled	1																															
B	RW	ENDRX																																	
			Clear	1																															
			Disabled	0																															
			Enabled	1																															
C	RW	ACQUIRED																																	
			Clear	1																															
			Disabled	0																															
			Enabled	1																															

Write '1' to Disable interrupt for END event

See *EVENTS_END*

Disable

Read: Disabled

Read: Enabled

Write '1' to Disable interrupt for ENDRX event

See *EVENTS_ENDRX*

Disable

Read: Disabled

Read: Enabled

Write '1' to Disable interrupt for ACQUIRED event

See *EVENTS_ACQUIRED*

Disable

Read: Disabled

Read: Enabled

32.5.4 SEMSTAT

Address offset: 0x400

Semaphore status register

Bit number				31	30	29	28	27	26	25	24	23	22	21	20	19	18	17	16	15	14	13	12	11	10	9	8	7	6	5	4	3	2	1	0
Id																																		A	A
Reset 0x00000001				**0**	**0**	**0**	**0**	**0**	**0**	**0**	**0**	**0**	**0**	**0**	**0**	**0**	**0**	**0**	**0**	**0**	**0**	**0**	**0**	**0**	**0**	**0**	**0**	**0**	**0**	**0**	**0**	**0**	**0**	**0**	**1**
Id	**RW**	**Field**	**Value Id**	**Value**																															
A	R	SEMSTAT																																	
			Free	0																															
			CPU	1																															
			SPIS	2																															
			CPUPending	3																															

Semaphore status

Semaphore is free

Semaphore is assigned to CPU

Semaphore is assigned to SPI slave

Semaphore is assigned to SPI but a handover to the CPU is pending

32.5.5 STATUS

Address offset: 0x440

Status from last transaction

Individual bits are cleared by writing a '1' to the bits that shall be cleared

Bit number				31	30	29	28	27	26	25	24	23	22	21	20	19	18	17	16	15	14	13	12	11	10	9	8	7	6	5	4	3	2	1	0
Id																																		B	A
Reset 0x00000000				**0**	**0**	**0**	**0**	**0**	**0**	**0**	**0**	**0**	**0**	**0**	**0**	**0**	**0**	**0**	**0**	**0**	**0**	**0**	**0**	**0**	**0**	**0**	**0**	**0**	**0**	**0**	**0**	**0**	**0**	**0**	**0**
Id	**RW**	**Field**	**Value Id**	**Value**																															
A	RW	OVERREAD																																	
			NotPresent	0																															
			Present	1																															
			Clear	1																															
B	RW	OVERFLOW																																	
			NotPresent	0																															
			Present	1																															
			Clear	1																															

TX buffer over-read detected, and prevented

Read: error not present

Read: error present

Write: clear error on writing '1'

RX buffer overflow detected, and prevented

Read: error not present

Read: error present

Write: clear error on writing '1'

32.5.6 ENABLE

Address offset: 0x500

Enable SPI slave

Bit number				31	30	29	28	27	26	25	24	23	22	21	20	19	18	17	16	15	14	13	12	11	10	9	8	7	6	5	4	3	2	1	0
Id																																A	A	A	A
Reset 0x00000000				**0**	**0**	**0**	**0**	**0**	**0**	**0**	**0**	**0**	**0**	**0**	**0**	**0**	**0**	**0**	**0**	**0**	**0**	**0**	**0**	**0**	**0**	**0**	**0**	**0**	**0**	**0**	**0**	**0**	**0**	**0**	**0**
Id	**RW**	**Field**	**Value Id**	**Value**																															
A	RW	ENABLE																																	
			Disabled	0																															
			Enabled	2																															

32.5.7 PSELSCK (Deprecated)

Address offset: 0x508

Pin select for SCK

Bit number				31	30	29	28	27	26	25	24	23	22	21	20	19	18	17	16	15	14	13	12	11	10	9	8	7	6	5	4	3	2	1	0
Id				A	A	A	A	A	A	A	A	A	A	A	A	A	A	A	A	A	A	A	A	A	A	A	A	A	A	A	A	A	A	A	A
Reset 0xFFFFFFFF				**1**	**1**	**1**	**1**	**1**	**1**	**1**	**1**	**1**	**1**	**1**	**1**	**1**	**1**	**1**	**1**	**1**	**1**	**1**	**1**	**1**	**1**	**1**	**1**	**1**	**1**	**1**	**1**	**1**	**1**	**1**	**1**
Id	**RW**	**Field**	**Value Id**	**Value**																															
A	RW	PSELSCK		[0..31]																															
			Disconnected	0xFFFFFFFF																															

32.5.8 PSELMISO (Deprecated)

Address offset: 0x50C

Pin select for MISO

Bit number				31	30	29	28	27	26	25	24	23	22	21	20	19	18	17	16	15	14	13	12	11	10	9	8	7	6	5	4	3	2	1	0
Id				A	A	A	A	A	A	A	A	A	A	A	A	A	A	A	A	A	A	A	A	A	A	A	A	A	A	A	A	A	A	A	A
Reset 0xFFFFFFFF				**1**	**1**	**1**	**1**	**1**	**1**	**1**	**1**	**1**	**1**	**1**	**1**	**1**	**1**	**1**	**1**	**1**	**1**	**1**	**1**	**1**	**1**	**1**	**1**	**1**	**1**	**1**	**1**	**1**	**1**	**1**	**1**
Id	**RW**	**Field**	**Value Id**	**Value**																															
A	RW	PSELMISO		[0..31]																															
			Disconnected	0xFFFFFFFF																															

32.5.9 PSELMOSI (Deprecated)

Address offset: 0x510

Pin select for MOSI

Bit number				31	30	29	28	27	26	25	24	23	22	21	20	19	18	17	16	15	14	13	12	11	10	9	8	7	6	5	4	3	2	1	0
Id				A	A	A	A	A	A	A	A	A	A	A	A	A	A	A	A	A	A	A	A	A	A	A	A	A	A	A	A	A	A	A	A
Reset 0xFFFFFFFF				**1**	**1**	**1**	**1**	**1**	**1**	**1**	**1**	**1**	**1**	**1**	**1**	**1**	**1**	**1**	**1**	**1**	**1**	**1**	**1**	**1**	**1**	**1**	**1**	**1**	**1**	**1**	**1**	**1**	**1**	**1**	**1**
Id	**RW**	**Field**	**Value Id**	**Value**																															
A	RW	PSELMOSI		[0..31]																															
			Disconnected	0xFFFFFFFF																															

32.5.10 PSELCSN (Deprecated)

Address offset: 0x514

Pin select for CSN

Bit number				31	30	29	28	27	26	25	24	23	22	21	20	19	18	17	16	15	14	13	12	11	10	9	8	7	6	5	4	3	2	1	0
Id				A	A	A	A	A	A	A	A	A	A	A	A	A	A	A	A	A	A	A	A	A	A	A	A	A	A	A	A	A	A	A	A
Reset 0xFFFFFFFF				**1**	**1**	**1**	**1**	**1**	**1**	**1**	**1**	**1**	**1**	**1**	**1**	**1**	**1**	**1**	**1**	**1**	**1**	**1**	**1**	**1**	**1**	**1**	**1**	**1**	**1**	**1**	**1**	**1**	**1**	**1**	**1**
Id	**RW**	**Field**	**Value Id**	**Value**																															
A	RW	PSELCSN		[0..31]																															
			Disconnected	0xFFFFFFFF																															

32.5.11 PSEL.SCK

Address offset: 0x508

Pin select for SCK

Bit number				31	30	29	28	27	26	25	24	23	22	21	20	19	18	17	16	15	14	13	12	11	10	9	8	7	6	5	4	3	2	1	0
Id				C																											A	A	A	A	A
Reset 0xFFFFFFFF				**1**	**1**	**1**	**1**	**1**	**1**	**1**	**1**	**1**	**1**	**1**	**1**	**1**	**1**	**1**	**1**	**1**	**1**	**1**	**1**	**1**	**1**	**1**	**1**	**1**	**1**	**1**	**1**	**1**	**1**	**1**	**1**
Id	**RW**	**Field**	**Value Id**	**Value**								**Description**																							
A	RW	PIN		[0..31]								Pin number																							
C	RW	CONNECT										Connection																							
			Disconnected	1								Disconnect																							
			Connected	0								Connect																							

32.5.12 PSEL.MISO

Address offset: 0x50C

Pin select for MISO signal

Bit number				31	30	29	28	27	26	25	24	23	22	21	20	19	18	17	16	15	14	13	12	11	10	9	8	7	6	5	4	3	2	1	0
Id				C																											A	A	A	A	A
Reset 0xFFFFFFFF				**1**	**1**	**1**	**1**	**1**	**1**	**1**	**1**	**1**	**1**	**1**	**1**	**1**	**1**	**1**	**1**	**1**	**1**	**1**	**1**	**1**	**1**	**1**	**1**	**1**	**1**	**1**	**1**	**1**	**1**	**1**	**1**
Id	**RW**	**Field**	**Value Id**	**Value**								**Description**																							
A	RW	PIN		[0..31]								Pin number																							
C	RW	CONNECT										Connection																							
			Disconnected	1								Disconnect																							
			Connected	0								Connect																							

32.5.13 PSEL.MOSI

Address offset: 0x510

Pin select for MOSI signal

Bit number				31	30	29	28	27	26	25	24	23	22	21	20	19	18	17	16	15	14	13	12	11	10	9	8	7	6	5	4	3	2	1	0
Id				C																											A	A	A	A	A
Reset 0xFFFFFFFF				**1**	**1**	**1**	**1**	**1**	**1**	**1**	**1**	**1**	**1**	**1**	**1**	**1**	**1**	**1**	**1**	**1**	**1**	**1**	**1**	**1**	**1**	**1**	**1**	**1**	**1**	**1**	**1**	**1**	**1**	**1**	**1**
Id	**RW**	**Field**	**Value Id**	**Value**								**Description**																							
A	RW	PIN		[0..31]								Pin number																							
C	RW	CONNECT										Connection																							
			Disconnected	1								Disconnect																							
			Connected	0								Connect																							

32.5.14 PSEL.CSN

Address offset: 0x514

Pin select for CSN signal

Bit number				31	30	29	28	27	26	25	24	23	22	21	20	19	18	17	16	15	14	13	12	11	10	9	8	7	6	5	4	3	2	1	0
Id				C																											A	A	A	A	A
Reset 0xFFFFFFFF				**1**	**1**	**1**	**1**	**1**	**1**	**1**	**1**	**1**	**1**	**1**	**1**	**1**	**1**	**1**	**1**	**1**	**1**	**1**	**1**	**1**	**1**	**1**	**1**	**1**	**1**	**1**	**1**	**1**	**1**	**1**	**1**
Id	**RW**	**Field**	**Value Id**	**Value**								**Description**																							
A	RW	PIN		[0..31]								Pin number																							
C	RW	CONNECT										Connection																							
			Disconnected	1								Disconnect																							
			Connected	0								Connect																							

32.5.15 RXDPTR (Deprecated)

Address offset: 0x534

RXD data pointer

Bit number	31	30	29	28	27	26	25	24	23	22	21	20	19	18	17	16	15	14	13	12	11	10	9	8	7	6	5	4	3	2	1	0
Id	A	A	A	A	A	A	A	A	A	A	A	A	A	A	A	A	A	A	A	A	A	A	A	A	A	A	A	A	A	A	A	A
Reset 0x00000000	**0**	**0**	**0**	**0**	**0**	**0**	**0**	**0**	**0**	**0**	**0**	**0**	**0**	**0**	**0**	**0**	**0**	**0**	**0**	**0**	**0**	**0**	**0**	**0**	**0**	**0**	**0**	**0**	**0**	**0**	**0**	**0**

Id	RW	Field	Value Id	Value	Description
A	RW	RXDPTR			RXD data pointer

32.5.16 MAXRX (Deprecated)

Address offset: 0x538

Maximum number of bytes in receive buffer

Bit number	31	30	29	28	27	26	25	24	23	22	21	20	19	18	17	16	15	14	13	12	11	10	9	8	7	6	5	4	3	2	1	0
Id																									A	A	A	A	A	A	A	A
Reset 0x00000000	**0**	**0**	**0**	**0**	**0**	**0**	**0**	**0**	**0**	**0**	**0**	**0**	**0**	**0**	**0**	**0**	**0**	**0**	**0**	**0**	**0**	**0**	**0**	**0**	**0**	**0**	**0**	**0**	**0**	**0**	**0**	**0**

Id	RW	Field	Value Id	Value	Description
A	RW	MAXRX			Maximum number of bytes in receive buffer

32.5.17 AMOUNTRX (Deprecated)

Address offset: 0x53C

Number of bytes received in last granted transaction

Bit number	31	30	29	28	27	26	25	24	23	22	21	20	19	18	17	16	15	14	13	12	11	10	9	8	7	6	5	4	3	2	1	0
Id																									A	A	A	A	A	A	A	A
Reset 0x00000000	**0**	**0**	**0**	**0**	**0**	**0**	**0**	**0**	**0**	**0**	**0**	**0**	**0**	**0**	**0**	**0**	**0**	**0**	**0**	**0**	**0**	**0**	**0**	**0**	**0**	**0**	**0**	**0**	**0**	**0**	**0**	**0**

Id	RW	Field	Value Id	Value	Description
A	R	AMOUNTRX			Number of bytes received in the last granted transaction

32.5.18 RXD.PTR

Address offset: 0x534

RXD data pointer

Bit number	31	30	29	28	27	26	25	24	23	22	21	20	19	18	17	16	15	14	13	12	11	10	9	8	7	6	5	4	3	2	1	0
Id	A	A	A	A	A	A	A	A	A	A	A	A	A	A	A	A	A	A	A	A	A	A	A	A	A	A	A	A	A	A	A	A
Reset 0x00000000	**0**	**0**	**0**	**0**	**0**	**0**	**0**	**0**	**0**	**0**	**0**	**0**	**0**	**0**	**0**	**0**	**0**	**0**	**0**	**0**	**0**	**0**	**0**	**0**	**0**	**0**	**0**	**0**	**0**	**0**	**0**	**0**

Id	RW	Field	Value Id	Value	Description
A	RW	PTR			RXD data pointer

32.5.19 RXD.MAXCNT

Address offset: 0x538

Maximum number of bytes in receive buffer

Bit number	31	30	29	28	27	26	25	24	23	22	21	20	19	18	17	16	15	14	13	12	11	10	9	8	7	6	5	4	3	2	1	0
Id																									A	A	A	A	A	A	A	A
Reset 0x00000000	**0**	**0**	**0**	**0**	**0**	**0**	**0**	**0**	**0**	**0**	**0**	**0**	**0**	**0**	**0**	**0**	**0**	**0**	**0**	**0**	**0**	**0**	**0**	**0**	**0**	**0**	**0**	**0**	**0**	**0**	**0**	**0**

Id	RW	Field	Value Id	Value	Description
A	RW	MAXCNT			Maximum number of bytes in receive buffer

32.5.20 RXD.AMOUNT

Address offset: 0x53C

Number of bytes received in last granted transaction

Bit number	31	30	29	28	27	26	25	24	23	22	21	20	19	18	17	16	15	14	13	12	11	10	9	8	7	6	5	4	3	2	1	0
Id																									A	A	A	A	A	A	A	A
Reset 0x00000000	**0**	**0**	**0**	**0**	**0**	**0**	**0**	**0**	**0**	**0**	**0**	**0**	**0**	**0**	**0**	**0**	**0**	**0**	**0**	**0**	**0**	**0**	**0**	**0**	**0**	**0**	**0**	**0**	**0**	**0**	**0**	**0**

Id	RW	Field	Value Id	Value	Description
A	R	AMOUNT			Number of bytes received in the last granted transaction

32.5.21 TXDPTR (Deprecated)

Address offset: 0x544

TXD data pointer

Bit number	31	30	29	28	27	26	25	24	23	22	21	20	19	18	17	16	15	14	13	12	11	10	9	8	7	6	5	4	3	2	1	0
Id	A	A	A	A	A	A	A	A	A	A	A	A	A	A	A	A	A	A	A	A	A	A	A	A	A	A	A	A	A	A	A	A
Reset 0x00000000	**0**	**0**	**0**	**0**	**0**	**0**	**0**	**0**	**0**	**0**	**0**	**0**	**0**	**0**	**0**	**0**	**0**	**0**	**0**	**0**	**0**	**0**	**0**	**0**	**0**	**0**	**0**	**0**	**0**	**0**	**0**	**0**

Id	RW	Field	Value Id	Value	Description
A	RW	TXDPTR			TXD data pointer

32.5.22 MAXTX (Deprecated)

Address offset: 0x548

Maximum number of bytes in transmit buffer

Bit number	31	30	29	28	27	26	25	24	23	22	21	20	19	18	17	16	15	14	13	12	11	10	9	8	7	6	5	4	3	2	1	0
Id																									A	A	A	A	A	A	A	A
Reset 0x00000000	**0**	**0**	**0**	**0**	**0**	**0**	**0**	**0**	**0**	**0**	**0**	**0**	**0**	**0**	**0**	**0**	**0**	**0**	**0**	**0**	**0**	**0**	**0**	**0**	**0**	**0**	**0**	**0**	**0**	**0**	**0**	**0**

Id	RW	Field	Value Id	Value	Description
A	RW	MAXTX			Maximum number of bytes in transmit buffer

32.5.23 AMOUNTTX (Deprecated)

Address offset: 0x54C

Number of bytes transmitted in last granted transaction

Bit number	31	30	29	28	27	26	25	24	23	22	21	20	19	18	17	16	15	14	13	12	11	10	9	8	7	6	5	4	3	2	1	0
Id																									A	A	A	A	A	A	A	A
Reset 0x00000000	**0**	**0**	**0**	**0**	**0**	**0**	**0**	**0**	**0**	**0**	**0**	**0**	**0**	**0**	**0**	**0**	**0**	**0**	**0**	**0**	**0**	**0**	**0**	**0**	**0**	**0**	**0**	**0**	**0**	**0**	**0**	**0**

Id	RW	Field	Value Id	Value	Description
A	R	AMOUNTTX			Number of bytes transmitted in last granted transaction

32.5.24 TXD.PTR

Address offset: 0x544

TXD data pointer

Bit number	31	30	29	28	27	26	25	24	23	22	21	20	19	18	17	16	15	14	13	12	11	10	9	8	7	6	5	4	3	2	1	0
Id	A	A	A	A	A	A	A	A	A	A	A	A	A	A	A	A	A	A	A	A	A	A	A	A	A	A	A	A	A	A	A	A
Reset 0x00000000	**0**	**0**	**0**	**0**	**0**	**0**	**0**	**0**	**0**	**0**	**0**	**0**	**0**	**0**	**0**	**0**	**0**	**0**	**0**	**0**	**0**	**0**	**0**	**0**	**0**	**0**	**0**	**0**	**0**	**0**	**0**	**0**

Id	RW	Field	Value Id	Value	Description
A	RW	PTR			TXD data pointer

32.5.25 TXD.MAXCNT

Address offset: 0x548

Maximum number of bytes in transmit buffer

Bit number	31	30	29	28	27	26	25	24	23	22	21	20	19	18	17	16	15	14	13	12	11	10	9	8	7	6	5	4	3	2	1	0
Id																									A	A	A	A	A	A	A	A
Reset 0x00000000	**0**	**0**	**0**	**0**	**0**	**0**	**0**	**0**	**0**	**0**	**0**	**0**	**0**	**0**	**0**	**0**	**0**	**0**	**0**	**0**	**0**	**0**	**0**	**0**	**0**	**0**	**0**	**0**	**0**	**0**	**0**	**0**

Id	RW	Field	Value Id	Value	Description
A	RW	MAXCNT			Maximum number of bytes in transmit buffer

32.5.26 TXD.AMOUNT

Address offset: 0x54C

Number of bytes transmitted in last granted transaction

Bit number				31	30	29	28	27	26	25	24	23	22	21	20	19	18	17	16	15	14	13	12	11	10	9	8	7	6	5	4	3	2	1	0
Id																												A	A	A	A	A	A	A	A
Reset 0x00000000				**0**	**0**	**0**	**0**	**0**	**0**	**0**	**0**	**0**	**0**	**0**	**0**	**0**	**0**	**0**	**0**	**0**	**0**	**0**	**0**	**0**	**0**	**0**	**0**	**0**	**0**	**0**	**0**	**0**	**0**	**0**	**0**
Id	**RW**	**Field**	**Value Id**	**Value**																								**Description**							
A	R	AMOUNT																										Number of bytes transmitted in last granted transaction							

32.5.27 CONFIG

Address offset: 0x554

Configuration register

Bit number				31	30	29	28	27	26	25	24	23	22	21	20	19	18	17	16	15	14	13	12	11	10	9	8	7	6	5	4	3	2	1	0
Id																																	C	B	A
Reset 0x00000000				**0**	**0**	**0**	**0**	**0**	**0**	**0**	**0**	**0**	**0**	**0**	**0**	**0**	**0**	**0**	**0**	**0**	**0**	**0**	**0**	**0**	**0**	**0**	**0**	**0**	**0**	**0**	**0**	**0**	**0**	**0**	**0**
Id	**RW**	**Field**	**Value Id**	**Value**																								**Description**							
A	RW	ORDER																										Bit order							
			MsbFirst	0																								Most significant bit shifted out first							
			LsbFirst	1																								Least significant bit shifted out first							
B	RW	CPHA																										Serial clock (SCK) phase							
			Leading	0																								Sample on leading edge of clock, shift serial data on trailing edge							
			Trailing	1																								Sample on trailing edge of clock, shift serial data on leading edge							
C	RW	CPOL																										Serial clock (SCK) polarity							
			ActiveHigh	0																								Active high							
			ActiveLow	1																								Active low							

32.5.28 DEF

Address offset: 0x55C

Default character. Character clocked out in case of an ignored transaction.

Bit number				31	30	29	28	27	26	25	24	23	22	21	20	19	18	17	16	15	14	13	12	11	10	9	8	7	6	5	4	3	2	1	0
Id																												A	A	A	A	A	A	A	A
Reset 0x00000000				**0**	**0**	**0**	**0**	**0**	**0**	**0**	**0**	**0**	**0**	**0**	**0**	**0**	**0**	**0**	**0**	**0**	**0**	**0**	**0**	**0**	**0**	**0**	**0**	**0**	**0**	**0**	**0**	**0**	**0**	**0**	**0**
Id	**RW**	**Field**	**Value Id**	**Value**																								**Description**							
A	RW	DEF																										Default character. Character clocked out in case of an ignored transaction.							

32.5.29 ORC

Address offset: 0x5C0

Over-read character

Bit number				31	30	29	28	27	26	25	24	23	22	21	20	19	18	17	16	15	14	13	12	11	10	9	8	7	6	5	4	3	2	1	0
Id																												A	A	A	A	A	A	A	A
Reset 0x00000000				**0**	**0**	**0**	**0**	**0**	**0**	**0**	**0**	**0**	**0**	**0**	**0**	**0**	**0**	**0**	**0**	**0**	**0**	**0**	**0**	**0**	**0**	**0**	**0**	**0**	**0**	**0**	**0**	**0**	**0**	**0**	**0**
Id	**RW**	**Field**	**Value Id**	**Value**																								**Description**							
A	RW	ORC																										Over-read character. Character clocked out after an over-read of the transmit buffer.							

32.6 Electrical Specification

32.6.1 SPIS slave interface electrical specifications

Symbol	Description	Min.	Typ.	Max.	Units
f_{SPIS}	Bit rates for SPIS[26]			8[27]	Mbps
$I_{SPIS,2Mbps}$	Run current for SPIS, 2 Mbps		45		µA
$I_{SPIS,8Mbps}$	Run current for SPIS, 8 Mbps		45		µA
$I_{SPIS,IDLE}$	Idle current for SPIS (STARTed, no CSN activity)		1		µA
$t_{SPIS,LP,START}$	Time from RELEASE task to ready to receive/transmit (CSN active), Low power mode		$t_{SPIS,CL,STAR}$ + t_{START_HFIN}		µs
$t_{SPIS,CL,START}$	Time from RELEASE task to receive/transmit (CSN active), Constant latency mode		0.125		µs

32.6.2 Serial Peripheral Interface Slave (SPIS) timing specifications

Symbol	Description	Min.	Typ.	Max.	Units
$t_{SPIS,CSCKIN,8Mbps}$	SCK input period at 8Mbps		125		ns
$t_{SPIS,CSCKIN,4Mbps}$	SCK input period at 4Mbps		250		ns
$t_{SPIS,CSCKIN,2Mbps}$	SCK input period at 2Mbps		500		ns
$t_{SPIS,RFSCKIN}$	SCK input rise/fall time			30	ns
$t_{SPIS,WHSCKIN}$	SCK input high time	30			ns
$t_{SPIS,WLSCKIN}$	SCK input low time	30			ns
$t_{SPIS,SUCSN,LP}$	CSN to CLK setup time, Low power mode	$t_{SPIS,SUCSN,}$ + t_{START_HFIN}			ns
$t_{SPIS,SUCSN,CL}$	CSN to CLK setup time, Constant latency mode	1000			ns
$t_{SPIS,HCSN}$	CLK to CSN hold time	2000			ns
$t_{SPIS,ASO}$	CSN to MISO driven[a]			1000	ns
$t_{SPIS,DISSO}$	CSN to MISO disabled[a]			68	ns
$t_{SPIS,CWH}$	CSN inactive time	300			ns
$t_{SPIS,VSO}$	CLK edge to MISO valid			19	ns
$t_{SPIS,HSO}$	MISO hold time after CLK edge	18[28]			ns
$t_{SPIS,SUSI}$	MOSI to CLK edge setup time	59			ns
$t_{SPIS,HSI}$	CLK edge to MOSI hold time	20			ns

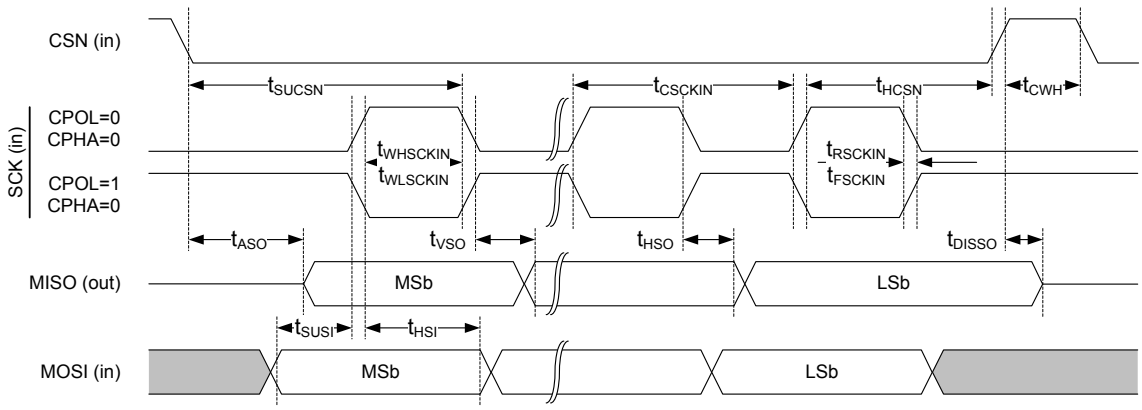

Figure 74: SPIS timing diagram

26 Higher bit rates may require GPIOs to be set as High Drive, see GPIO chapter for more details.
27 The actual maximum data rate depends on the master's CLK to MISO and MOSI setup and hold timings.
a At 25pF load, including GPIO capacitance, see GPIO spec.
28 This is to ensure compatibility to SPI masters sampling MISO on the same edge as MOSI is output

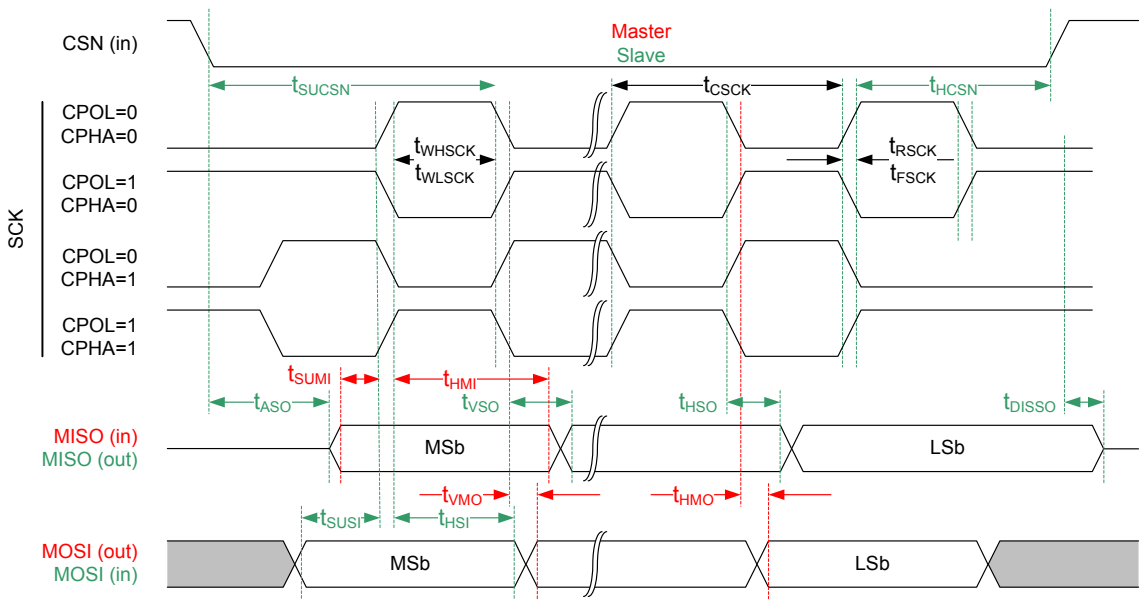

Figure 75: Common SPIM and SPIS timing diagram

33 TWIM — I²C compatible two-wire interface master with EasyDMA

TWI master with EasyDMA (TWIM) is a two-wire half-duplex master which can communicate with multiple slave devices connected to the same bus

Listed here are the main features for TWIM:

- I²C compatible
- 100 kbps, 250 kbps, or 400 kbps
- Support for clock stretching
- EasyDMA

The two-wire interface can communicate with a bi-directional wired-AND bus with two lines (SCL, SDA). The protocol makes it possible to interconnect up to 127 individually addressable devices. TWIM is not compatible with CBUS.

The GPIOs used for each two-wire interface line can be chosen from any GPIO on the device and are independently configurable. This enables great flexibility in device pinout and efficient use of board space and signal routing.

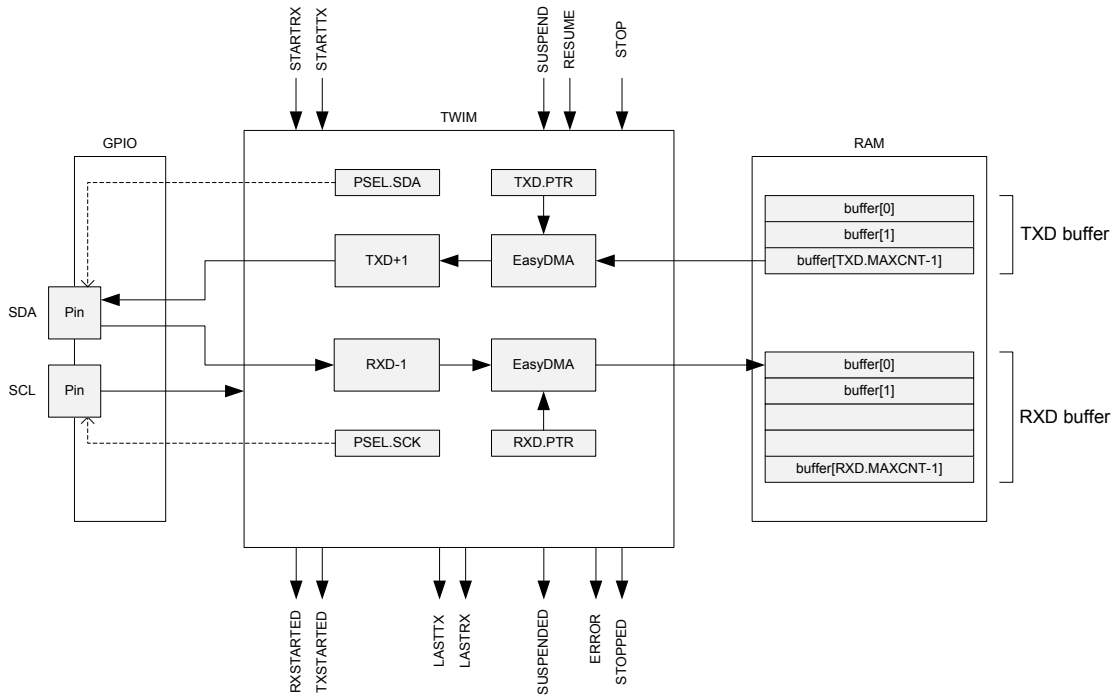

Figure 76: TWI master with EasyDMA

A typical TWI setup consists of one master and one or more slaves. For an example, see *Figure 77: A typical TWI setup comprising one master and three slaves* on page 301. This TWIM is only able to operate as a single master on the TWI bus. Multi-master bus configuration is not supported.

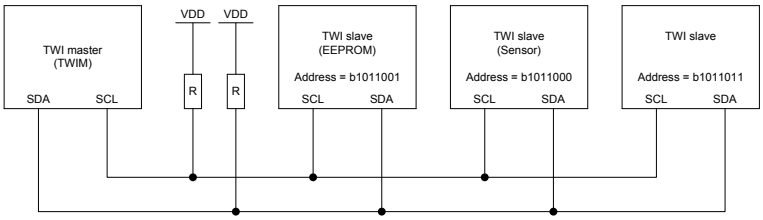

Figure 77: A typical TWI setup comprising one master and three slaves

This TWI master supports clock stretching performed by the slaves. The TWI master is started by triggering the STARTTX or STARTRX tasks, and stopped by triggering the STOP task. The TWI master will generate a STOPPED event when it has stopped following a STOP task.

The TWI master cannot get stopped while it is suspended, so the STOP task has to be issued after the TWI master has been resumed.

After the TWI master is started, the STARTTX task or the STARTRX task should not be triggered again before the TWI master has stopped, i.e. following a LASTRX, LASTTX or STOPPED event.

If a NACK is clocked in from the slave, the TWI master will generate an ERROR event.

33.1 Shared resources

The TWI master shares registers and other resources with other peripherals that have the same ID as the TWI master. Therefore, you must disable all peripherals that have the same ID as the TWI master before the TWI master can be configured and used.

Disabling a peripheral that has the same ID as the TWI master will not reset any of the registers that are shared with the TWI master. It is therefore important to configure all relevant registers explicitly to secure that the TWI master operates correctly.

The Instantiation table in *Instantiation* on page 21 shows which peripherals have the same ID as the TWI.

33.2 EasyDMA

The TWI master implements EasyDMA for reading and writing to and from the RAM.

If the TXD.PTR and the RXD.PTR are not pointing to the Data RAM region, an EasyDMA transfer may result in a HardFault or RAM corruption. See *Memory* on page 20 for more information about the different memory regions.

The .PTR and .MAXCNT registers are double-buffered. They can be updated and prepared for the next RX/TX transmission immediately after having received the RXSTARTED/TXSTARTED event.

The STOPPED event indicates that EasyDMA has finished accessing the buffer in RAM.

33.2.1 EasyDMA list

EasyDMA supports one list type.

The supported list type is:

- Array list

EasyDMA array list

The EasyDMA array list can be represented by the data structure ArrayList_type.

For illustration, see the code example below. This data structure includes only a buffer with size equal to Channel.MAXCNT. EasyDMA will use the Channel.MAXCNT register to determine when the buffer is full. Replace 'Channel' by the specific data channel you want to use, for instance 'NRF_SPIM->RXD', 'NRF_SPIM->TXD', 'NRF_TWIM->RXD', etc.

The Channel.MAXCNT register cannot be specified larger than the actual size of the buffer. If Channel.MAXCNT is specified larger than the size of the buffer, the EasyDMA channel may overflow the buffer.

This array list does not provide a mechanism to explicitly specify where the next item in the list is located. Instead, it assumes that the list is organized as a linear array where items are located one after the other in RAM.

```
#define BUFFER_SIZE  4
```

```
typedef struct ArrayList
{
  uint8_t buffer[BUFFER_SIZE];
} ArrayList_type;

ArrayList_type MyArrayList[3];

//replace 'Channel' below by the specific data channel you want to use,
//         for instance 'NRF_SPIM->RXD', 'NRF_TWIM->RXD', etc.
Channel.MAXCNT = BUFFER_SIZE;
Channel.PTR = &MyArrayList;
```

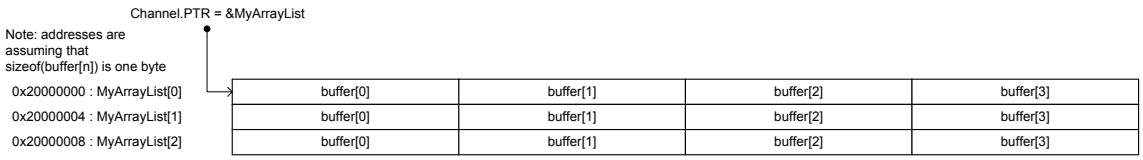

Figure 78: EasyDMA array list

33.3 Master write sequence

A TWI master write sequence is started by triggering the STARTTX task. After the STARTTX task has been triggered, the TWI master will generate a start condition on the TWI bus, followed by clocking out the address and the READ/WRITE bit set to 0 (WRITE=0, READ=1).

The address must match the address of the slave device that the master wants to write to. The READ/WRITE bit is followed by an ACK/NACK bit (ACK=0 or NACK=1) generated by the slave.

After receiving the ACK bit, the TWI master will clock out the data bytes found in the transmit buffer located in RAM at the address specified in the TXD.PTR register. Each byte clocked out from the master will be followed by an ACK/NACK bit clocked in from the slave.

A typical TWI master write sequence is illustrated in *Figure 79: TWI master writing data to a slave* on page 303. Occurrence 2 in the figure illustrates clock stretching performed by the TWI master following a SUSPEND task.

A SUSPENDED event indicates that the SUSPEND task has taken effect; this event can be used to synchronize the software.

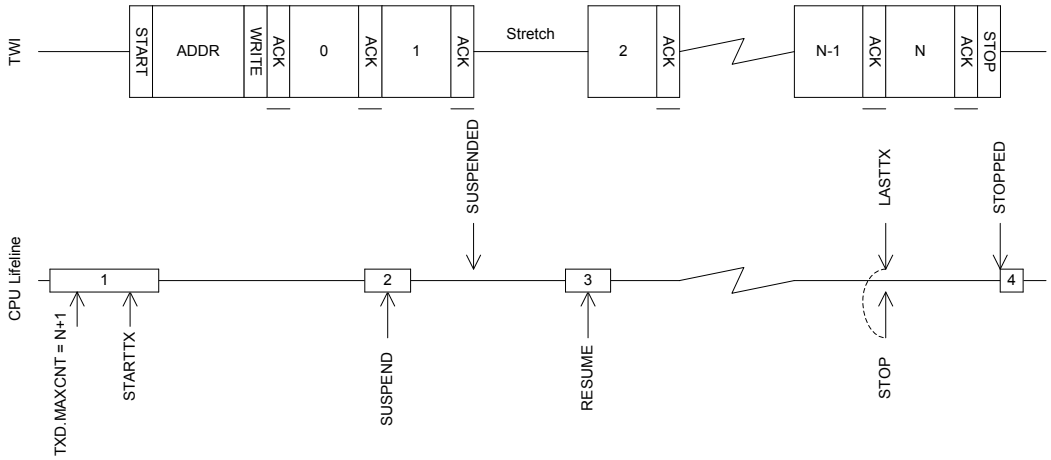

Figure 79: TWI master writing data to a slave

The TWI master will generate a LASTTX event when it starts to transmit the last byte, this is illustrated in *Figure 79: TWI master writing data to a slave* on page 303

The TWI master is stopped by triggering the STOP task, this task should be triggered during the transmission of the last byte to secure that the TWI will stop as fast as possible after sending the last byte. It is safe to use the shortcut between LASTTX and STOP to accomplish this.

Note that the TWI master does not stop by itself when the whole RAM buffer has been sent, or when an error occurs. The STOP task must be issued, through the use of a local or PPI shortcut, or in software as part of the error handler.

The TWI master cannot get stopped while it is suspended, so the STOP task has to be issued after the TWI master has been resumed.

33.4 Master read sequence

A TWI master read sequence is started by triggering the STARTRX task. After the STARTRX task has been triggered the TWI master will generate a start condition on the TWI bus, followed by clocking out the address and the READ/WRITE bit set to 1 (WRITE = 0, READ = 1). The address must match the address of the slave device that the master wants to read from. The READ/WRITE bit is followed by an ACK/NACK bit (ACK=0 or NACK = 1) generated by the slave.

After having sent the ACK bit the TWI slave will send data to the master using the clock generated by the master.

Data received will be stored in RAM at the address specified in the RXD.PTR register. The TWI master will generate an ACK after all but the last byte received from the slave. The TWI master will generate a NACK after the last byte received to indicate that the read sequence shall stop.

A typical TWI master read sequence is illustrated in *Figure 80: The TWI master reading data from a slave* on page 305. Occurrence 2 in the figure illustrates clock stretching performed by the TWI master following a SUSPEND task.

A SUSPENDED event indicates that the SUSPEND task has taken effect; this event can be used to synchronize the software.

The TWI master will generate a LASTRX event when it is ready to receive the last byte, this is illustrated in *Figure 80: The TWI master reading data from a slave* on page 305. If RXD.MAXCNT > 1 the LASTRX event is generated after sending the ACK of the previously received byte. If RXD.MAXCNT = 1 the LASTRX event is generated after receiving the ACK following the address and READ bit.

The TWI master is stopped by triggering the STOP task, this task must be triggered before the NACK bit is supposed to be transmitted. The STOP task can be triggered at any time during the reception of the last byte. It is safe to use the shortcut between LASTRX and STOP to accomplish this.

Note that the TWI master does not stop by itself when the RAM buffer is full, or when an error occurs. The STOP task must be issued, through the use of a local or PPI shortcut, or in software as part of the error handler.

The TWI master cannot get stopped while it is suspended, so the STOP task has to be issued after the TWI master has been resumed.

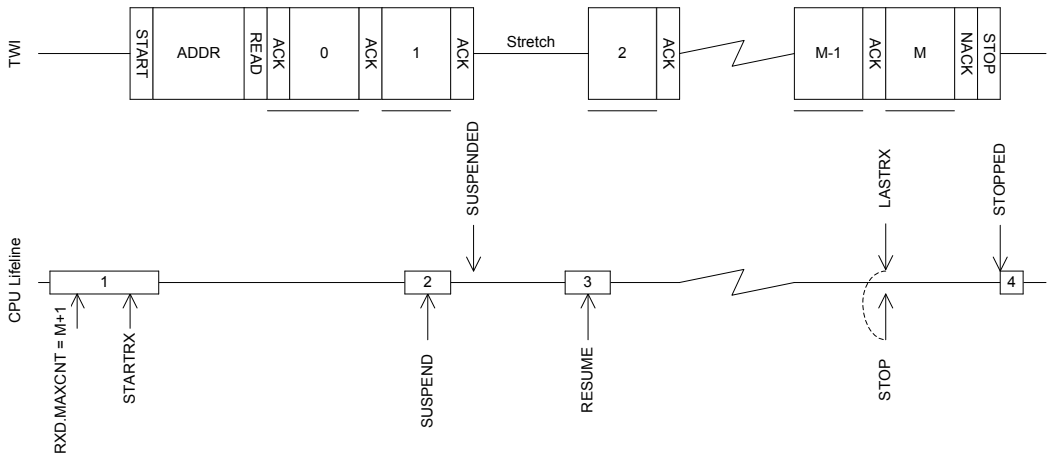

Figure 80: The TWI master reading data from a slave

33.5 Master repeated start sequence

A typical repeated start sequence is one in which the TWI master writes two bytes to the slave followed by reading four bytes from the slave. This example uses shortcuts to perform the simplest type of repeated start sequence, i.e. one write followed by one read. The same approach can be used to perform a repeated start sequence where the sequence is read followed by write.

The figure *Figure 81: A repeated start sequence, where the TWI master writes two bytes followed by reading 4 bytes from the slave* on page 305 illustrates this:

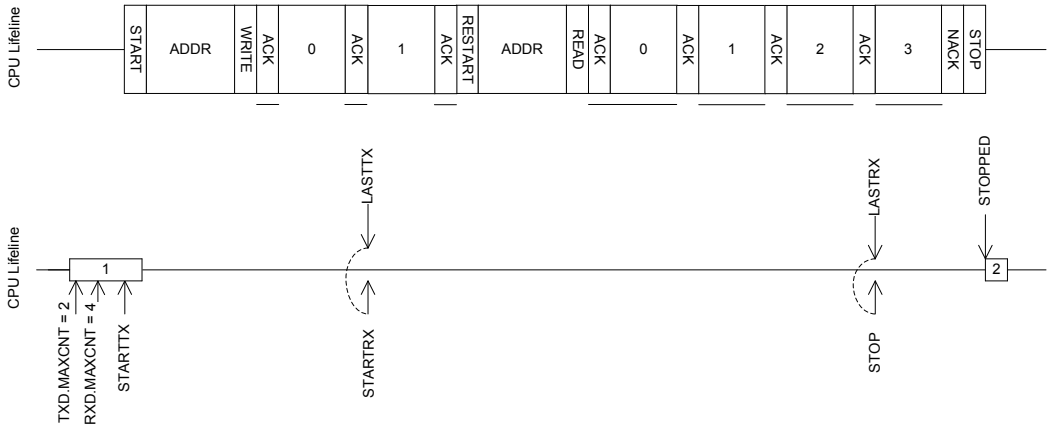

Figure 81: A repeated start sequence, where the TWI master writes two bytes followed by reading 4 bytes from the slave

If a more complex repeated start sequence is needed and the TWI firmware drive is serviced in a low priority interrupt it may be necessary to use the SUSPEND task and SUSPENDED event to guarantee that the correct tasks are generated at the correct time. This is illustrated in *Figure 82: A double repeated start sequence using the SUSPEND task to secure safe operation in low priority interrupts* on page 306.

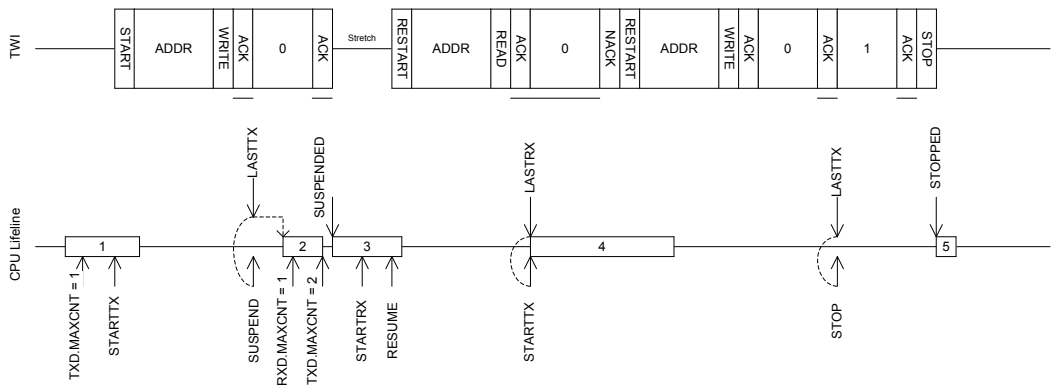

Figure 82: A double repeated start sequence using the SUSPEND task to secure safe operation in low priority interrupts

33.6 Low power

When putting the system in low power and the peripheral is not needed, lowest possible power consumption is achieved by stopping, and then disabling the peripheral.

The STOP task may not be always needed (the peripheral might already be stopped), but if it is sent, software shall wait until the STOPPED event was received as a response before disabling the peripheral through the ENABLE register.

33.7 Master mode pin configuration

The SCL and SDA signals associated with the TWI master are mapped to physical pins according to the configuration specified in the PSEL.SCL and PSEL.SDA registers respectively.

The PSEL.SCL and PSEL.SDA registers and their configurations are only used as long as the TWI master is enabled, and retained only as long as the device is in ON mode. When the peripheral is disabled, the pins will behave as regular GPIOs, and use the configuration in their respective OUT bit field and PIN_CNF[n] register. PSEL.SCL, PSEL.SDA must only be configured when the TWI master is disabled.

To secure correct signal levels on the pins used by the TWI master when the system is in OFF mode, and when the TWI master is disabled, these pins must be configured in the GPIO peripheral as described in *Table 69: GPIO configuration before enabling peripheral* on page 306.

Only one peripheral can be assigned to drive a particular GPIO pin at a time. Failing to do so may result in unpredictable behavior.

Table 69: GPIO configuration before enabling peripheral

TWI master signal	TWI master pin	Direction	Output value	Drive strength
SCL	As specified in PSEL.SCL	Input	Not applicable	S0D1
SDA	As specified in PSEL.SDA	Input	Not applicable	S0D1

33.8 Registers

Table 70: Instances

Base address	Peripheral	Instance	Description	Configuration
0x40003000	TWIM	TWIM0	Two-wire interface master 0	
0x40004000	TWIM	TWIM1	Two-wire interface master 1	

Table 71: Register Overview

Register	Offset	Description
TASKS_STARTRX	0x000	Start TWI receive sequence

Register	Offset	Description
TASKS_STARTTX	0x008	Start TWI transmit sequence
TASKS_STOP	0x014	Stop TWI transaction. Must be issued while the TWI master is not suspended.
TASKS_SUSPEND	0x01C	Suspend TWI transaction
TASKS_RESUME	0x020	Resume TWI transaction
EVENTS_STOPPED	0x104	TWI stopped
EVENTS_ERROR	0x124	TWI error
EVENTS_SUSPENDED	0x148	Last byte has been sent out after the SUSPEND task has been issued, TWI traffic is now suspended.
EVENTS_RXSTARTED	0x14C	Receive sequence started
EVENTS_TXSTARTED	0x150	Transmit sequence started
EVENTS_LASTRX	0x15C	Byte boundary, starting to receive the last byte
EVENTS_LASTTX	0x160	Byte boundary, starting to transmit the last byte
SHORTS	0x200	Shortcut register
INTEN	0x300	Enable or disable interrupt
INTENSET	0x304	Enable interrupt
INTENCLR	0x308	Disable interrupt
ERRORSRC	0x4C4	Error source
ENABLE	0x500	Enable TWIM
PSEL.SCL	0x508	Pin select for SCL signal
PSEL.SDA	0x50C	Pin select for SDA signal
FREQUENCY	0x524	TWI frequency
RXD.PTR	0x534	Data pointer
RXD.MAXCNT	0x538	Maximum number of bytes in receive buffer
RXD.AMOUNT	0x53C	Number of bytes transferred in the last transaction
RXD.LIST	0x540	EasyDMA list type
TXD.PTR	0x544	Data pointer
TXD.MAXCNT	0x548	Maximum number of bytes in transmit buffer
TXD.AMOUNT	0x54C	Number of bytes transferred in the last transaction
TXD.LIST	0x550	EasyDMA list type
ADDRESS	0x588	Address used in the TWI transfer

33.8.1 SHORTS

Address offset: 0x200

Shortcut register

Bit number	31	30	29	28	27	26	25	24	23	22	21	20	19	18	17	16	15	14	13	12	11	10	9	8	7	6	5	4	3	2	1	0
Id																				F		D	C	B	A							
Reset 0x00000000	**0**	**0**	**0**	**0**	**0**	**0**	**0**	**0**	**0**	**0**	**0**	**0**	**0**	**0**	**0**	**0**	**0**	**0**	**0**	**0**	**0**	**0**	**0**	**0**	**0**	**0**	**0**	**0**	**0**	**0**	**0**	**0**

Id	RW	Field	Value Id	Value	Description
A	RW	LASTTX_STARTRX			Shortcut between LASTTX event and STARTRX task See *EVENTS_LASTTX* and *TASKS_STARTRX*
			Disabled	0	Disable shortcut
			Enabled	1	Enable shortcut
B	RW	LASTTX_SUSPEND			Shortcut between LASTTX event and SUSPEND task See *EVENTS_LASTTX* and *TASKS_SUSPEND*
			Disabled	0	Disable shortcut
			Enabled	1	Enable shortcut
C	RW	LASTTX_STOP			Shortcut between LASTTX event and STOP task See *EVENTS_LASTTX* and *TASKS_STOP*
			Disabled	0	Disable shortcut
			Enabled	1	Enable shortcut
D	RW	LASTRX_STARTTX			Shortcut between LASTRX event and STARTTX task See *EVENTS_LASTRX* and *TASKS_STARTTX*
			Disabled	0	Disable shortcut
			Enabled	1	Enable shortcut
F	RW	LASTRX_STOP			Shortcut between LASTRX event and STOP task

Bit number				31	30	29	28	27	26	25	24	23	22	21	20	19	18	17	16	15	14	13	12	11	10	9	8	7	6	5	4	3	2	1	0
Id																							F		D	C	B	A							
Reset 0x00000000				**0**	**0**	**0**	**0**	**0**	**0**	**0**	**0**	**0**	**0**	**0**	**0**	**0**	**0**	**0**	**0**	**0**	**0**	**0**	**0**	**0**	**0**	**0**	**0**	**0**	**0**	**0**	**0**	**0**	**0**	**0**	**0**
Id	**RW**	**Field**	**Value Id**	**Value**								**Description**																							
																										See *EVENTS_LASTRX* and *TASKS_STOP*									
			Disabled	0																						Disable shortcut									
			Enabled	1																						Enable shortcut									

33.8.2 INTEN

Address offset: 0x300

Enable or disable interrupt

Bit number				31	30	29	28	27	26	25	24	23	22	21	20	19	18	17	16	15	14	13	12	11	10	9	8	7	6	5	4	3	2	1	0
Id											J	I			H	G	F									D								A	
Reset 0x00000000				**0**	**0**	**0**	**0**	**0**	**0**	**0**	**0**	**0**	**0**	**0**	**0**	**0**	**0**	**0**	**0**	**0**	**0**	**0**	**0**	**0**	**0**	**0**	**0**	**0**	**0**	**0**	**0**	**0**	**0**	**0**	**0**
Id	**RW**	**Field**	**Value Id**	**Value**								**Description**																							
A	RW	STOPPED																								Enable or disable interrupt for STOPPED event See *EVENTS_STOPPED*									
			Disabled	0																						Disable									
			Enabled	1																						Enable									
D	RW	ERROR																								Enable or disable interrupt for ERROR event See *EVENTS_ERROR*									
			Disabled	0																						Disable									
			Enabled	1																						Enable									
F	RW	SUSPENDED																								Enable or disable interrupt for SUSPENDED event See *EVENTS_SUSPENDED*									
			Disabled	0																						Disable									
			Enabled	1																						Enable									
G	RW	RXSTARTED																								Enable or disable interrupt for RXSTARTED event See *EVENTS_RXSTARTED*									
			Disabled	0																						Disable									
			Enabled	1																						Enable									
H	RW	TXSTARTED																								Enable or disable interrupt for TXSTARTED event See *EVENTS_TXSTARTED*									
			Disabled	0																						Disable									
			Enabled	1																						Enable									
I	RW	LASTRX																								Enable or disable interrupt for LASTRX event See *EVENTS_LASTRX*									
			Disabled	0																						Disable									
			Enabled	1																						Enable									
J	RW	LASTTX																								Enable or disable interrupt for LASTTX event See *EVENTS_LASTTX*									
			Disabled	0																						Disable									
			Enabled	1																						Enable									

33.8.3 INTENSET

Address offset: 0x304

Enable interrupt

Bit number				31	30	29	28	27	26	25	24	23	22	21	20	19	18	17	16	15	14	13	12	11	10	9	8	7	6	5	4	3	2	1	0
Id											J	I			H	G	F									D								A	
Reset 0x00000000				**0**	**0**	**0**	**0**	**0**	**0**	**0**	**0**	**0**	**0**	**0**	**0**	**0**	**0**	**0**	**0**	**0**	**0**	**0**	**0**	**0**	**0**	**0**	**0**	**0**	**0**	**0**	**0**	**0**	**0**	**0**	**0**
Id	**RW**	**Field**	**Value Id**	**Value**								**Description**																							
A	RW	STOPPED																								Write '1' to Enable interrupt for STOPPED event									

Bit number				31	30	29	28	27	26	25	24	23	22	21	20	19	18	17	16	15	14	13	12	11	10	9	8	7	6	5	4	3	2	1	0
Id											J	I			H	G	F									D								A	
Reset 0x00000000				**0**	**0**	**0**	**0**	**0**	**0**	**0**	**0**	**0**	**0**	**0**	**0**	**0**	**0**	**0**	**0**	**0**	**0**	**0**	**0**	**0**	**0**	**0**	**0**	**0**	**0**	**0**	**0**	**0**	**0**	**0**	**0**
Id	**RW**	**Field**	**Value Id**	**Value**								**Description**																							
												See *EVENTS_STOPPED*																							
			Set	1								Enable																							
			Disabled	0								Read: Disabled																							
			Enabled	1								Read: Enabled																							
D	RW	ERROR										Write '1' to Enable interrupt for ERROR event See *EVENTS_ERROR*																							
			Set	1								Enable																							
			Disabled	0								Read: Disabled																							
			Enabled	1								Read: Enabled																							
F	RW	SUSPENDED										Write '1' to Enable interrupt for SUSPENDED event See *EVENTS_SUSPENDED*																							
			Set	1								Enable																							
			Disabled	0								Read: Disabled																							
			Enabled	1								Read: Enabled																							
G	RW	RXSTARTED										Write '1' to Enable interrupt for RXSTARTED event See *EVENTS_RXSTARTED*																							
			Set	1								Enable																							
			Disabled	0								Read: Disabled																							
			Enabled	1								Read: Enabled																							
H	RW	TXSTARTED										Write '1' to Enable interrupt for TXSTARTED event See *EVENTS_TXSTARTED*																							
			Set	1								Enable																							
			Disabled	0								Read: Disabled																							
			Enabled	1								Read: Enabled																							
I	RW	LASTRX										Write '1' to Enable interrupt for LASTRX event See *EVENTS_LASTRX*																							
			Set	1								Enable																							
			Disabled	0								Read: Disabled																							
			Enabled	1								Read: Enabled																							
J	RW	LASTTX										Write '1' to Enable interrupt for LASTTX event See *EVENTS_LASTTX*																							
			Set	1								Enable																							
			Disabled	0								Read: Disabled																							
			Enabled	1								Read: Enabled																							

33.8.4 INTENCLR

Address offset: 0x308

Disable interrupt

Bit number				31	30	29	28	27	26	25	24	23	22	21	20	19	18	17	16	15	14	13	12	11	10	9	8	7	6	5	4	3	2	1	0
Id											J	I			H	G	F									D								A	
Reset 0x00000000				**0**	**0**	**0**	**0**	**0**	**0**	**0**	**0**	**0**	**0**	**0**	**0**	**0**	**0**	**0**	**0**	**0**	**0**	**0**	**0**	**0**	**0**	**0**	**0**	**0**	**0**	**0**	**0**	**0**	**0**	**0**	**0**
Id	**RW**	**Field**	**Value Id**	**Value**								**Description**																							
A	RW	STOPPED										Write '1' to Disable interrupt for STOPPED event See *EVENTS_STOPPED*																							
			Clear	1								Disable																							
			Disabled	0								Read: Disabled																							
			Enabled	1								Read: Enabled																							
D	RW	ERROR										Write '1' to Disable interrupt for ERROR event See *EVENTS_ERROR*																							
			Clear	1								Disable																							

Bit number				31	30	29	28	27	26	25	24	23	22	21	20	19	18	17	16	15	14	13	12	11	10	9	8	7	6	5	4	3	2	1	0
Id											J	I			H	G	F									D								A	
Reset 0x00000000				**0**	**0**	**0**	**0**	**0**	**0**	**0**	**0**	**0**	**0**	**0**	**0**	**0**	**0**	**0**	**0**	**0**	**0**	**0**	**0**	**0**	**0**	**0**	**0**	**0**	**0**	**0**	**0**	**0**	**0**	**0**	**0**
Id	**RW**	**Field**	**Value Id**	**Value**								**Description**																							
			Disabled	0								Read: Disabled																							
			Enabled	1								Read: Enabled																							
F	RW	SUSPENDED										Write '1' to Disable interrupt for SUSPENDED event See *EVENTS_SUSPENDED*																							
			Clear	1								Disable																							
			Disabled	0								Read: Disabled																							
			Enabled	1								Read: Enabled																							
G	RW	RXSTARTED										Write '1' to Disable interrupt for RXSTARTED event See *EVENTS_RXSTARTED*																							
			Clear	1								Disable																							
			Disabled	0								Read: Disabled																							
			Enabled	1								Read: Enabled																							
H	RW	TXSTARTED										Write '1' to Disable interrupt for TXSTARTED event See *EVENTS_TXSTARTED*																							
			Clear	1								Disable																							
			Disabled	0								Read: Disabled																							
			Enabled	1								Read: Enabled																							
I	RW	LASTRX										Write '1' to Disable interrupt for LASTRX event See *EVENTS_LASTRX*																							
			Clear	1								Disable																							
			Disabled	0								Read: Disabled																							
			Enabled	1								Read: Enabled																							
J	RW	LASTTX										Write '1' to Disable interrupt for LASTTX event See *EVENTS_LASTTX*																							
			Clear	1								Disable																							
			Disabled	0								Read: Disabled																							
			Enabled	1								Read: Enabled																							

33.8.5 ERRORSRC

Address offset: 0x4C4

Error source

Bit number				31	30	29	28	27	26	25	24	23	22	21	20	19	18	17	16	15	14	13	12	11	10	9	8	7	6	5	4	3	2	1	0
Id																																	B	A	
Reset 0x00000000				**0**	**0**	**0**	**0**	**0**	**0**	**0**	**0**	**0**	**0**	**0**	**0**	**0**	**0**	**0**	**0**	**0**	**0**	**0**	**0**	**0**	**0**	**0**	**0**	**0**	**0**	**0**	**0**	**0**	**0**	**0**	**0**
Id	**RW**	**Field**	**Value Id**	**Value**								**Description**																							
A	RW	ANACK										NACK received after sending the address (write '1' to clear)																							
			NotReceived	0								Error did not occur																							
			Received	1								Error occurred																							
B	RW	DNACK										NACK received after sending a data byte (write '1' to clear)																							
			NotReceived	0								Error did not occur																							
			Received	1								Error occurred																							

33.8.6 ENABLE

Address offset: 0x500

Enable TWIM

Bit number				31	30	29	28	27	26	25	24	23	22	21	20	19	18	17	16	15	14	13	12	11	10	9	8	7	6	5	4	3	2	1	0
Id																																A	A	A	A
Reset 0x00000000				**0**	**0**	**0**	**0**	**0**	**0**	**0**	**0**	**0**	**0**	**0**	**0**	**0**	**0**	**0**	**0**	**0**	**0**	**0**	**0**	**0**	**0**	**0**	**0**	**0**	**0**	**0**	**0**	**0**	**0**	**0**	**0**
Id	**RW**	**Field**	**Value Id**	**Value**								**Description**																							
A	RW	ENABLE										Enable or disable TWIM																							
			Disabled	0								Disable TWIM																							
			Enabled	6								Enable TWIM																							

33.8.7 PSEL.SCL

Address offset: 0x508

Pin select for SCL signal

Bit number				31	30	29	28	27	26	25	24	23	22	21	20	19	18	17	16	15	14	13	12	11	10	9	8	7	6	5	4	3	2	1	0
Id				C																											A	A	A	A	A
Reset 0xFFFFFFFF				**1**	**1**	**1**	**1**	**1**	**1**	**1**	**1**	**1**	**1**	**1**	**1**	**1**	**1**	**1**	**1**	**1**	**1**	**1**	**1**	**1**	**1**	**1**	**1**	**1**	**1**	**1**	**1**	**1**	**1**	**1**	**1**
Id	**RW**	**Field**	**Value Id**	**Value**								**Description**																							
A	RW	PIN		[0..31]								Pin number																							
C	RW	CONNECT										Connection																							
			Disconnected	1								Disconnect																							
			Connected	0								Connect																							

33.8.8 PSEL.SDA

Address offset: 0x50C

Pin select for SDA signal

Bit number				31	30	29	28	27	26	25	24	23	22	21	20	19	18	17	16	15	14	13	12	11	10	9	8	7	6	5	4	3	2	1	0
Id				C																											A	A	A	A	A
Reset 0xFFFFFFFF				**1**	**1**	**1**	**1**	**1**	**1**	**1**	**1**	**1**	**1**	**1**	**1**	**1**	**1**	**1**	**1**	**1**	**1**	**1**	**1**	**1**	**1**	**1**	**1**	**1**	**1**	**1**	**1**	**1**	**1**	**1**	**1**
Id	**RW**	**Field**	**Value Id**	**Value**								**Description**																							
A	RW	PIN		[0..31]								Pin number																							
C	RW	CONNECT										Connection																							
			Disconnected	1								Disconnect																							
			Connected	0								Connect																							

33.8.9 FREQUENCY

Address offset: 0x524

TWI frequency

Bit number				31	30	29	28	27	26	25	24	23	22	21	20	19	18	17	16	15	14	13	12	11	10	9	8	7	6	5	4	3	2	1	0
Id				A	A	A	A	A	A	A	A	A	A	A	A	A	A	A	A	A	A	A	A	A	A	A	A	A	A	A	A	A	A	A	A
Reset 0x04000000				**0**	**0**	**0**	**0**	**0**	**1**	**0**	**0**	**0**	**0**	**0**	**0**	**0**	**0**	**0**	**0**	**0**	**0**	**0**	**0**	**0**	**0**	**0**	**0**	**0**	**0**	**0**	**0**	**0**	**0**	**0**	**0**
Id	**RW**	**Field**	**Value Id**	**Value**								**Description**																							
A	RW	FREQUENCY										TWI master clock frequency																							
			K100	0x01980000								100 kbps																							
			K250	0x04000000								250 kbps																							
			K400	0x06400000								400 kbps																							

33.8.10 RXD.PTR

Address offset: 0x534

Data pointer

Bit number				31	30	29	28	27	26	25	24	23	22	21	20	19	18	17	16	15	14	13	12	11	10	9	8	7	6	5	4	3	2	1	0
Id				A	A	A	A	A	A	A	A	A	A	A	A	A	A	A	A	A	A	A	A	A	A	A	A	A	A	A	A	A	A	A	A
Reset 0x00000000				**0**	**0**	**0**	**0**	**0**	**0**	**0**	**0**	**0**	**0**	**0**	**0**	**0**	**0**	**0**	**0**	**0**	**0**	**0**	**0**	**0**	**0**	**0**	**0**	**0**	**0**	**0**	**0**	**0**	**0**	**0**	**0**
Id	**RW**	**Field**	**Value Id**	**Value**								**Description**																							
A	RW	PTR										Data pointer																							

33.8.11 RXD.MAXCNT

Address offset: 0x538

Maximum number of bytes in receive buffer

Bit number	31	30	29	28	27	26	25	24	23	22	21	20	19	18	17	16	15	14	13	12	11	10	9	8	7	6	5	4	3	2	1	0
Id																									A	A	A	A	A	A	A	A
Reset 0x00000000	**0**	**0**	**0**	**0**	**0**	**0**	**0**	**0**	**0**	**0**	**0**	**0**	**0**	**0**	**0**	**0**	**0**	**0**	**0**	**0**	**0**	**0**	**0**	**0**	**0**	**0**	**0**	**0**	**0**	**0**	**0**	**0**

Id	RW	Field	Value Id	Value	Description
A	RW	MAXCNT		[1..255]	Maximum number of bytes in receive buffer

33.8.12 RXD.AMOUNT

Address offset: 0x53C

Number of bytes transferred in the last transaction

Bit number	31	30	29	28	27	26	25	24	23	22	21	20	19	18	17	16	15	14	13	12	11	10	9	8	7	6	5	4	3	2	1	0
Id																									A	A	A	A	A	A	A	A
Reset 0x00000000	**0**	**0**	**0**	**0**	**0**	**0**	**0**	**0**	**0**	**0**	**0**	**0**	**0**	**0**	**0**	**0**	**0**	**0**	**0**	**0**	**0**	**0**	**0**	**0**	**0**	**0**	**0**	**0**	**0**	**0**	**0**	**0**

Id	RW	Field	Value Id	Value	Description
A	R	AMOUNT			Number of bytes transferred in the last transaction. In case of NACK error, includes the NACK'ed byte.

33.8.13 RXD.LIST

Address offset: 0x540

EasyDMA list type

Bit number	31	30	29	28	27	26	25	24	23	22	21	20	19	18	17	16	15	14	13	12	11	10	9	8	7	6	5	4	3	2	1	0
Id																														A	A	A
Reset 0x00000000	**0**	**0**	**0**	**0**	**0**	**0**	**0**	**0**	**0**	**0**	**0**	**0**	**0**	**0**	**0**	**0**	**0**	**0**	**0**	**0**	**0**	**0**	**0**	**0**	**0**	**0**	**0**	**0**	**0**	**0**	**0**	**0**

Id	RW	Field	Value Id	Value	Description
A	RW	LIST			List type
			Disabled	0	Disable EasyDMA list
			ArrayList	1	Use array list

33.8.14 TXD.PTR

Address offset: 0x544

Data pointer

Bit number	31	30	29	28	27	26	25	24	23	22	21	20	19	18	17	16	15	14	13	12	11	10	9	8	7	6	5	4	3	2	1	0
Id	A	A	A	A	A	A	A	A	A	A	A	A	A	A	A	A	A	A	A	A	A	A	A	A	A	A	A	A	A	A	A	A
Reset 0x00000000	**0**	**0**	**0**	**0**	**0**	**0**	**0**	**0**	**0**	**0**	**0**	**0**	**0**	**0**	**0**	**0**	**0**	**0**	**0**	**0**	**0**	**0**	**0**	**0**	**0**	**0**	**0**	**0**	**0**	**0**	**0**	**0**

Id	RW	Field	Value Id	Value	Description
A	RW	PTR			Data pointer

33.8.15 TXD.MAXCNT

Address offset: 0x548

Maximum number of bytes in transmit buffer

Bit number	31	30	29	28	27	26	25	24	23	22	21	20	19	18	17	16	15	14	13	12	11	10	9	8	7	6	5	4	3	2	1	0
Id																									A	A	A	A	A	A	A	A
Reset 0x00000000	**0**	**0**	**0**	**0**	**0**	**0**	**0**	**0**	**0**	**0**	**0**	**0**	**0**	**0**	**0**	**0**	**0**	**0**	**0**	**0**	**0**	**0**	**0**	**0**	**0**	**0**	**0**	**0**	**0**	**0**	**0**	**0**

Id	RW	Field	Value Id	Value	Description
A	RW	MAXCNT		[1..255]	Maximum number of bytes in transmit buffer

33.8.16 TXD.AMOUNT

Address offset: 0x54C

Number of bytes transferred in the last transaction

Bit number	31	30	29	28	27	26	25	24	23	22	21	20	19	18	17	16	15	14	13	12	11	10	9	8	7	6	5	4	3	2	1	0
Id																									A	A	A	A	A	A	A	A
Reset 0x00000000	**0**	**0**	**0**	**0**	**0**	**0**	**0**	**0**	**0**	**0**	**0**	**0**	**0**	**0**	**0**	**0**	**0**	**0**	**0**	**0**	**0**	**0**	**0**	**0**	**0**	**0**	**0**	**0**	**0**	**0**	**0**	**0**

Id	RW	Field	Value Id	Value	Description
A	R	AMOUNT			Number of bytes transferred in the last transaction. In case of NACK error, includes the NACK'ed byte.

33.8.17 TXD.LIST

Address offset: 0x550

EasyDMA list type

Bit number	31	30	29	28	27	26	25	24	23	22	21	20	19	18	17	16	15	14	13	12	11	10	9	8	7	6	5	4	3	2	1	0
Id																														A	A	A
Reset 0x00000000	**0**	**0**	**0**	**0**	**0**	**0**	**0**	**0**	**0**	**0**	**0**	**0**	**0**	**0**	**0**	**0**	**0**	**0**	**0**	**0**	**0**	**0**	**0**	**0**	**0**	**0**	**0**	**0**	**0**	**0**	**0**	**0**

Id	RW	Field	Value Id	Value	Description
A	RW	LIST			List type
			Disabled	0	Disable EasyDMA list
			ArrayList	1	Use array list

33.8.18 ADDRESS

Address offset: 0x588

Address used in the TWI transfer

Bit number	31	30	29	28	27	26	25	24	23	22	21	20	19	18	17	16	15	14	13	12	11	10	9	8	7	6	5	4	3	2	1	0
Id																										A	A	A	A	A	A	A
Reset 0x00000000	**0**	**0**	**0**	**0**	**0**	**0**	**0**	**0**	**0**	**0**	**0**	**0**	**0**	**0**	**0**	**0**	**0**	**0**	**0**	**0**	**0**	**0**	**0**	**0**	**0**	**0**	**0**	**0**	**0**	**0**	**0**	**0**

Id	RW	Field	Value Id	Value	Description
A	RW	ADDRESS			Address used in the TWI transfer

33.9 Electrical Specification

33.9.1 TWIM interface electrical specifications

Symbol	Description	Min.	Typ.	Max.	Units
f_{TWIM}	Bit rates for TWIM[29]	100		400	kbps
$I_{TWIM,100kbps}$	Run current for TWIM, 100 kbps		50		µA
$I_{TWIM,400kbps}$	Run current for TWIM, 400 kbps		50		µA
$t_{TWIM,START,LP}$	Time from STARTRX/STARTTX task to transmission started, Low power mode		$t_{TWIM,START}$ + t_{START_HFIN}		µs
$t_{TWIM,START,CL}$	Time from STARTRX/STARTTX task to transmission started, Constant latency mode		1.5		µs

33.9.2 Two Wire Interface Master (TWIM) timing specifications

Symbol	Description	Min.	Typ.	Max.	Units
$f_{TWIM,SCL,100kbps}$	SCL clock frequency, 100 kbps		100		kHz
$f_{TWIM,SCL,250kbps}$	SCL clock frequency, 250 kbps		250		kHz
$f_{TWIM,SCL,400kbps}$	SCL clock frequency, 400 kbps		400		kHz

[29] Higher bit rates or stronger pull-ups may require GPIOs to be set as High Drive, see GPIO chapter for more details.

Symbol	Description	Min.	Typ.	Max.	Units
t_{TWIM,SU_DAT}	Data setup time before positive edge on SCL – all modes	300			ns
t_{TWIM,HD_DAT}	Data hold time after negative edge on SCL – all modes	500			ns
$t_{TWIM,HD\_STA,100kbps}$	TWIM master hold time for START and repeated START condition, 100 kbps	10000			ns
$t_{TWIM,HD\_STA,250kbps}$	TWIM master hold time for START and repeated START condition, 250kbps	4000			ns
$t_{TWIM,HD\_STA,400kbps}$	TWIM master hold time for START and repeated START condition, 400 kbps	2500			ns
$t_{TWIM,SU\_STO,100kbps}$	TWIM master setup time from SCL high to STOP condition, 100 kbps	5000			ns
$t_{TWIM,SU\_STO,250kbps}$	TWIM master setup time from SCL high to STOP condition, 250 kbps	2000			ns
$t_{TWIM,SU\_STO,400kbps}$	TWIM master setup time from SCL high to STOP condition, 400 kbps	1250			ns
$t_{TWIM,BUF,100kbps}$	TWIM master bus free time between STOP and START conditions, 100 kbps	5800			ns
$t_{TWIM,BUF,250kbps}$	TWIM master bus free time between STOP and START conditions, 250 kbps	2700			ns
$t_{TWIM,BUF,400kbps}$	TWIM master bus free time between STOP and START conditions, 400 kbps	2100			ns

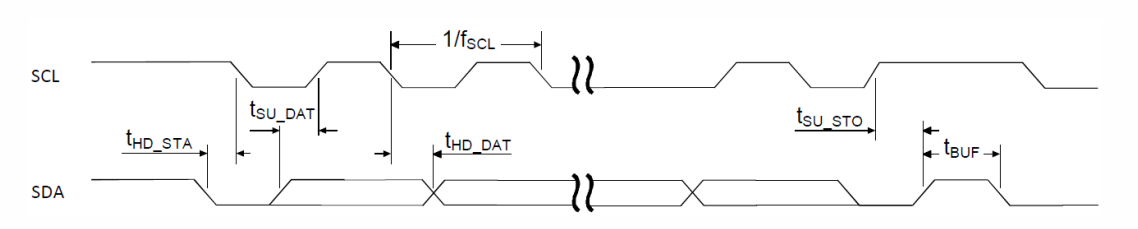

Figure 83: TWIM timing diagram, 1 byte transaction

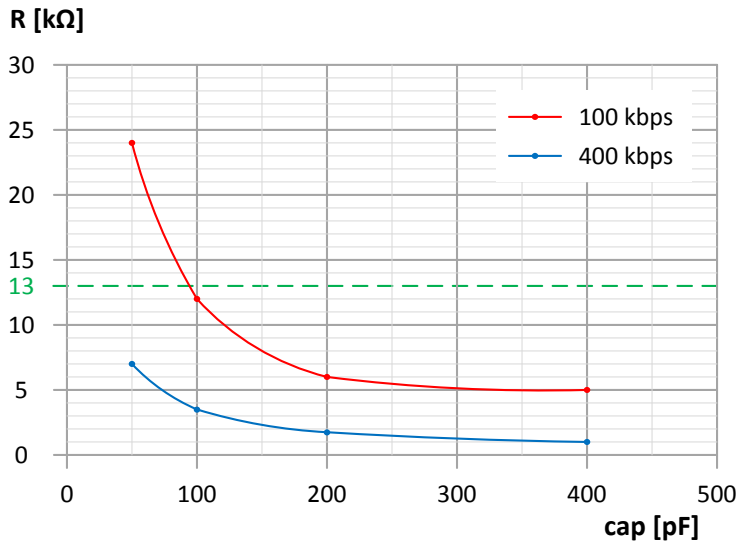

Figure 84: Recommended TWIM pullup value vs. line capacitance

- The I2C specification allows a line capacitance of 400 pF at most.
- The nRF52832 internal pullup has a fixed value of typ. 13 kOhm, see R_{PU} in the GPIO chapter.

34 TWIS — I²C compatible two-wire interface slave with EasyDMA

TWI slave with EasyDMA (TWIS) is compatible with I²C operating at 100 kHz and 400 kHz. The TWI transmitter and receiver implement EasyDMA.

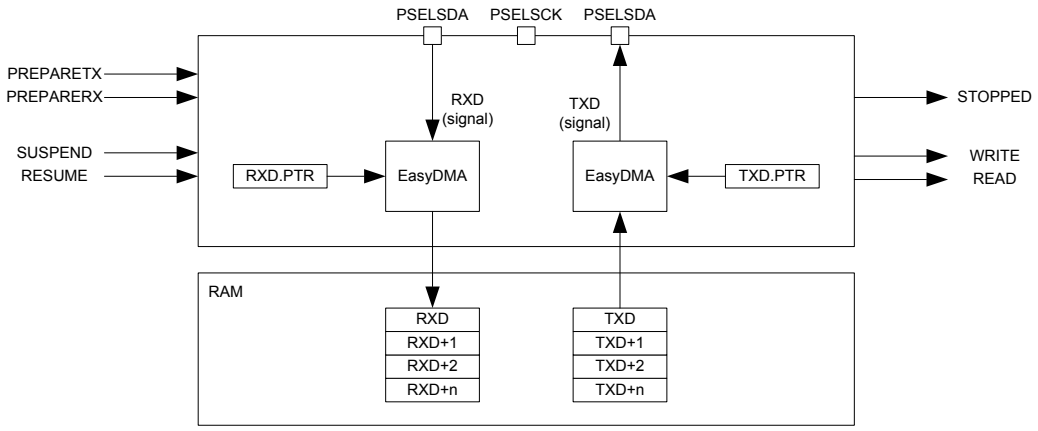

Figure 85: TWI slave with EasyDMA

A typical TWI setup consists of one master and one or more slaves. For an example, see *Figure 86: A typical TWI setup comprising one master and three slaves* on page 315. TWIS is only able to operate with a single master on the TWI bus.

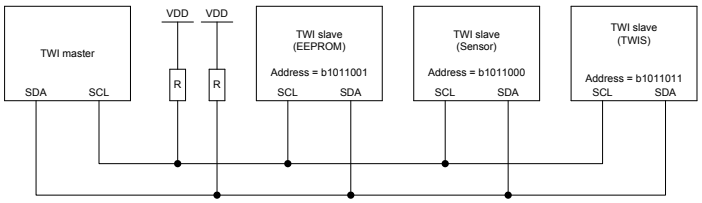

Figure 86: A typical TWI setup comprising one master and three slaves

The TWI slave state machine is illustrated in *Figure 87: TWI slave state machine* on page 316 and *Table 72: TWI slave state machine symbols* on page 316 is explaining the different symbols used in the state machine.

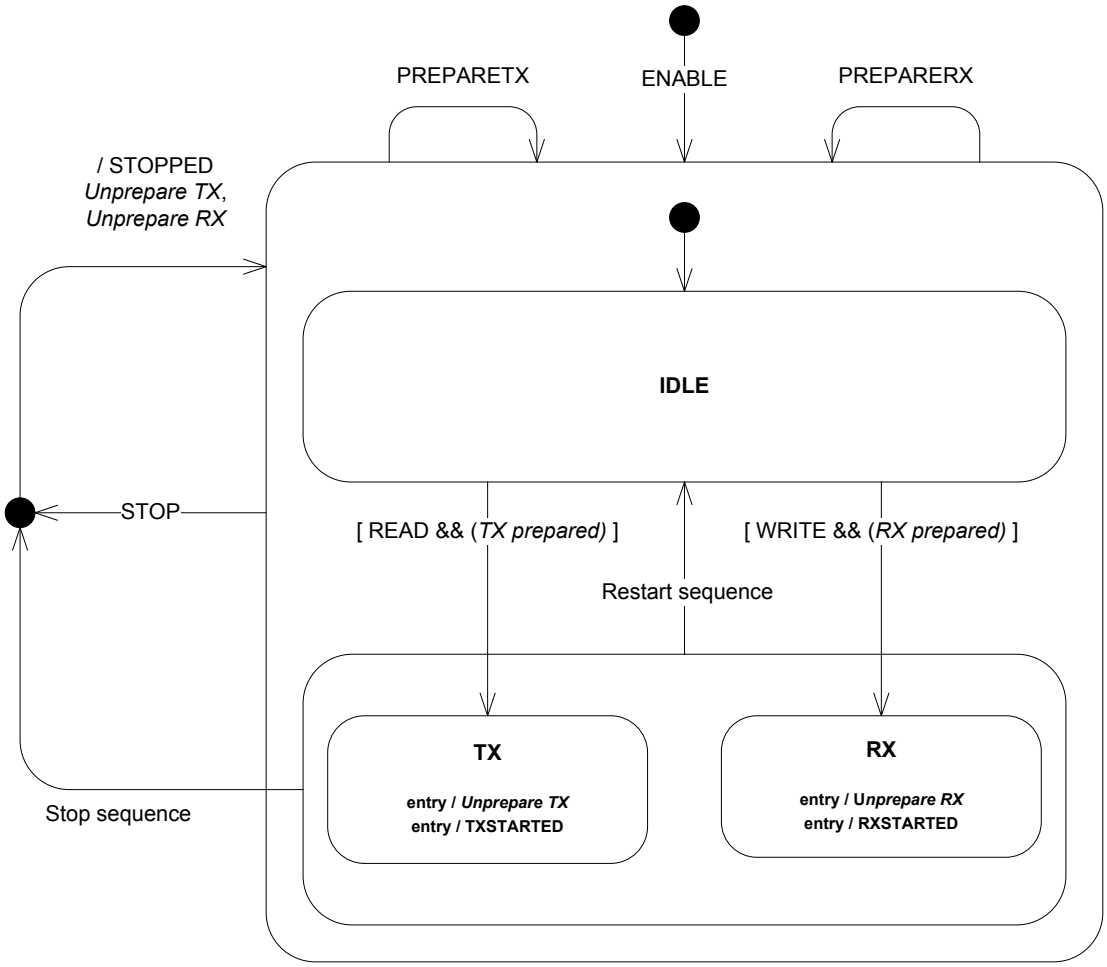

Figure 87: TWI slave state machine

Table 72: TWI slave state machine symbols

Symbol	Type	Description
ENABLE	Register	The TWI slave has been enabled via the *ENABLE* register
PREPARETX	Task	The *TASKS_PREPARETX* task has been triggered
STOP	Task	The *TASKS_STOP* task has been triggered
PREPARERX	Task	The *TASKS_PREPARERX* task has been triggered
STOPPED	Event	The *EVENTS_STOPPED* event was generated
RXSTARTED	Event	The *EVENTS_RXSTARTED* event was generated
TXSTARTED	Event	The *EVENTS_TXSTARTED* event was generated
TX prepared	Internal	Internal flag indicating that a *TASKS_PREPARETX* task has been triggered. This flag is not visible to the user.
RX prepared	Internal	Internal flag indicating that a *TASKS_PREPARERX* task has been triggered. This flag is not visible to the user.
Unprepare TX	Internal	Clears the internal 'TX prepared' flag until next *TASKS_PREPARETX* task.
Unprepare RX	Internal	Clears the internal 'RX prepared' flag until next *TASKS_PREPARERX* task.
Stop sequence	TWI protocol	A TWI stop sequence was detected
Restart sequence	TWI protocol	A TWI restart sequence was detected

The TWI slave supports clock stretching performed by the master.

The TWI slave operates in a low power mode while waiting for a TWI master to initiate a transfer. As long as the TWI slave is not addressed, it will remain in this low power mode.

To secure correct behaviour of the TWI slave, PSEL.SCL, PSEL.SDA, CONFIG and the ADDRESS[n] registers, must be configured prior to enabling the TWI slave through the ENABLE register. Similarly, changing these settings must be performed while the TWI slave is disabled. Failing to do so may result in unpredictable behaviour.

34.1 Shared resources

The TWI slave shares registers and other resources with other peripherals that have the same ID as the TWI slave.

Therefore, you must disable all peripherals that have the same ID as the TWI slave before the TWI slave can be configured and used. Disabling a peripheral that has the same ID as the TWI slave will not reset any of the registers that are shared with the TWI slave. It is therefore important to configure all relevant registers explicitly to secure that the TWI slave operates correctly.

The Instantiation table in *Instantiation* on page 21 shows which peripherals have the same ID as the TWI slave.

34.2 EasyDMA

The TWI slave implements EasyDMA for reading and writing to and from the RAM.

The STOPPED event indicates that EasyDMA has finished accessing the buffer in RAM.

If the TXD.PTR and the RXD.PTR are not pointing to the Data RAM region, an EasyDMA transfer may result in a HardFault or RAM corruption. See *Memory* on page 20 for more information about the different memory regions.

34.3 TWI slave responding to a read command

Before the TWI slave can respond to a read command the TWI slave must be configured correctly and enabled via the ENABLE register. When enabled the TWI slave will be in its IDLE state where it will consume I_{IDLE} .

A read command is started when the TWI master generates a start condition on the TWI bus, followed by clocking out the address and the READ/WRITE bit set to 1 (WRITE=0, READ=1). The READ/WRITE bit is followed by an ACK/NACK bit (ACK=0 or NACK=1) response from the TWI slave.

The TWI slave is able to listen for up to two addresses at the same time. Which addresses to listen for is configured in the ADDRESS registers and the CONFIG register.

The TWI slave will only acknowledge (ACK) the read command if the address presented by the master matches one of the addresses the slave is configured to listen for. The TWI slave will generate a READ event when it acknowledges the read command.

The TWI slave is only able to detect a read command from the IDLE state.

The TWI slave will set an internal 'TX prepared' flag when the PREPARETX task is triggered.

When the read command is received the TWI slave will enter the TX state if the internal 'TX prepared' flag is set.

If the internal 'TX prepared' flag is not set when the read command is received, the TWI slave will stretch the master's clock until the PREPARETX task is triggered and the internal 'TX prepared' flag is set.

The TWI slave will generate the TXSTARTED event and clear the 'TX prepared' flag ('unprepare TX') when it enters the TX state. In this state the TWI slave will send the data bytes found in the transmit buffer to the master using the master's clock. The TWI slave will consume I_{TX} in this mode.

The TWI slave will go back to the IDLE state if the TWI slave receives a restart command when it is in the TX state.

The TWI slave is stopped when it receives the stop condition from the TWI master. A STOPPED event will be generated when the transaction has stopped. The TWI slave will clear the 'TX prepared' flag ('unprepare TX') and go back to the IDLE state when it has stopped.

The transmit buffer is located in RAM at the address specified in the TXD.PTR register. The TWI slave will only be able to send TXD.MAXCNT bytes from the transmit buffer for each transaction. If the TWI master

forces the slave to send more than TXD.MAXCNT bytes, the slave will send the byte specified in the ORC register to the master instead. If this happens, an ERROR event will be generated.

The EasyDMA configuration registers, see TXD.PTR etc., are latched when the TXSTARTED event is generated.

The TWI slave can be forced to stop by triggering the STOP task. A STOPPED event will be generated when the TWI slave has stopped. The TWI slave will clear the 'TX prepared' flag and go back to the IDLE state when it has stopped, see also *Terminating an ongoing TWI transaction* on page 320.

Each byte sent from the slave will be followed by an ACK/NACK bit sent from the master. The TWI master will generate a NACK following the last byte that it wants to receive to tell the slave to release the bus so that the TWI master can generate the stop condition. The TXD.AMOUNT register can be queried after a transaction to see how many bytes were sent.

A typical TWI slave read command response is illustrated in *Figure 88: The TWI slave responding to a read command* on page 318. Occurrence 2 in the figure illustrates clock stretching performed by the TWI slave following a SUSPEND task.

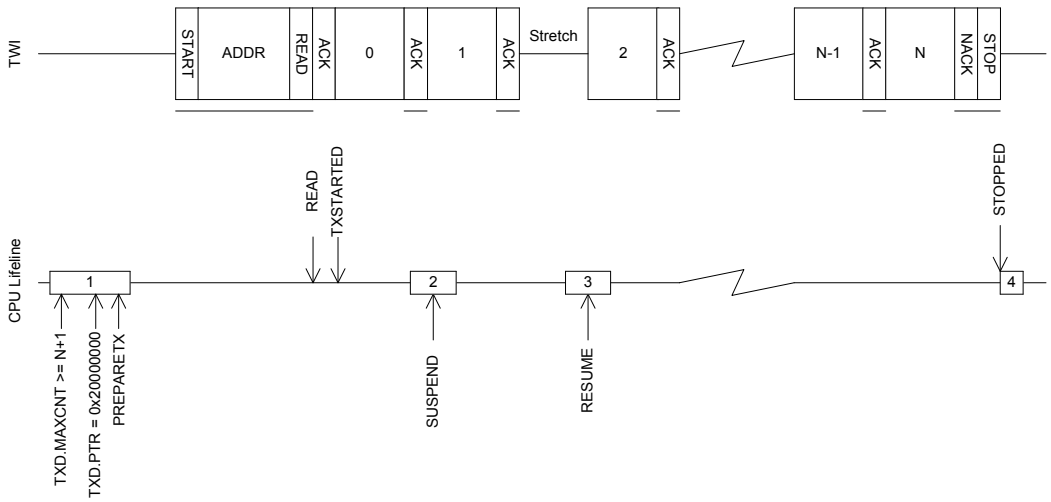

Figure 88: The TWI slave responding to a read command

34.4 TWI slave responding to a write command

Before the TWI slave can respond to a write command the TWI slave must be configured correctly and enabled via the ENABLE register. When enabled the TWI slave will be in its IDLE state where it will consume I_{IDLE}.

A write command is started when the TWI master generates a start condition on the TWI bus, followed by clocking out the address and the READ/WRITE bit set to 0 (WRITE=0, READ=1). The READ/WRITE bit is followed by an ACK/NACK bit (ACK=0 or NACK=1) response from the slave.

The TWI slave is able to listen for up to two addresses at the same time. Which addresses to listen for is configured in the ADDRESS registers and the CONFIG register.

The TWI slave will only acknowledge (ACK) the write command if the address presented by the master matches one of the addresses the slave is configured to listen for. The TWI slave will generate a WRITE event if it acknowledges the write command.

The TWI slave is only able to detect a write command from the IDLE state.

The TWI slave will set an internal 'RX prepared' flag when the PREPARERX task is triggered.

When the write command is received the TWI slave will enter the RX state if the internal 'RX prepared' flag is set.

If the internal 'RX prepared' flag is not set when the write command is received, the TWI slave will stretch the master's clock until the PREPARERX task is triggered and the internal 'RX prepared' flag is set.

The TWI slave will generate the RXSTARTED event and clear the internal 'RX prepared' flag ('unprepare RX') when it enters the RX state. In this state the TWI slave will be able to receive the bytes sent by the TWI master. The TWI slave will consume I_{RX} in this mode.

The TWI slave will go back to the IDLE state if the TWI slave receives a restart command when it is in the RX state.

The TWI slave is stopped when it receives the stop condition from the TWI master. A STOPPED event will be generated when the transaction has stopped. The TWI slave will clear the internal 'RX prepared' flag ('unprepare RX') and go back to the IDLE state when it has stopped.

The receive buffer is located in RAM at the address specified in the TXD.PTR register. The TWI slave will only be able to receive as many bytes as specified in the RXD.MAXCNT register. If the TWI master tries to send more bytes to the slave than the slave is able to receive,these bytes will be discarded and the bytes will be NACKed by the slave. If this happens, an ERROR event will be generated.

The EasyDMA configuration registers, see RXD.PTR etc., are latched when the RXSTARTED event is generated.

The TWI slave can be forced to stop by triggering the STOP task. A STOPPED event will be generated when the TWI slave has stopped. The TWI slave will clear the internal 'RX prepared' flag and go back to the IDLE state when it has stopped, see also *Terminating an ongoing TWI transaction* on page 320.

The TWI slave will generate an ACK after every byte received from the master. The RXD.AMOUNT register can be queried after a transaction to see how many bytes were received.

A typical TWI slave write command response is illustrated in *Figure 89: The TWI slave responding to a write command* on page 319. Occurrence 2 in the figure illustrates clock stretching performed by the TWI slave following a SUSPEND task.

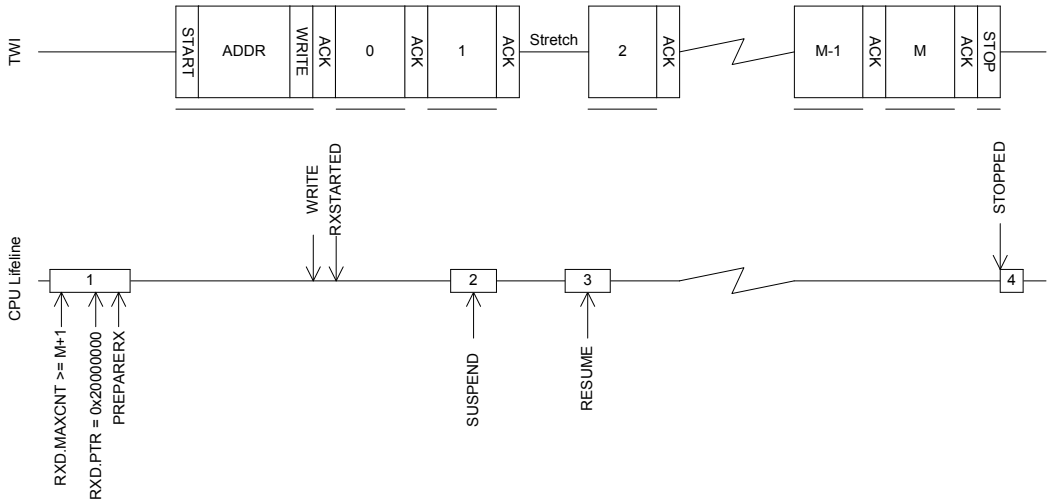

Figure 89: The TWI slave responding to a write command

34.5 Master repeated start sequence

An example of a repeated start sequence is one in which the TWI master writes two bytes to the slave followed by reading four bytes from the slave.

This is illustrated in *Figure 90: A repeated start sequence, where the TWI master writes two bytes followed by reading four bytes from the slave* on page 320.

It is here assumed that the receiver does not know in advance what the master wants to read, and that this information is provided in the first two bytes received in the write part of the repeated start sequence. To guarantee that the CPU is able to process the received data before the TWI slave starts to reply to the read command, the SUSPEND task is triggered via a shortcut from the READ event generated when the read command is received. When the CPU has processed the incoming data and prepared the correct data response, the CPU will resume the transaction by triggering the RESUME task.

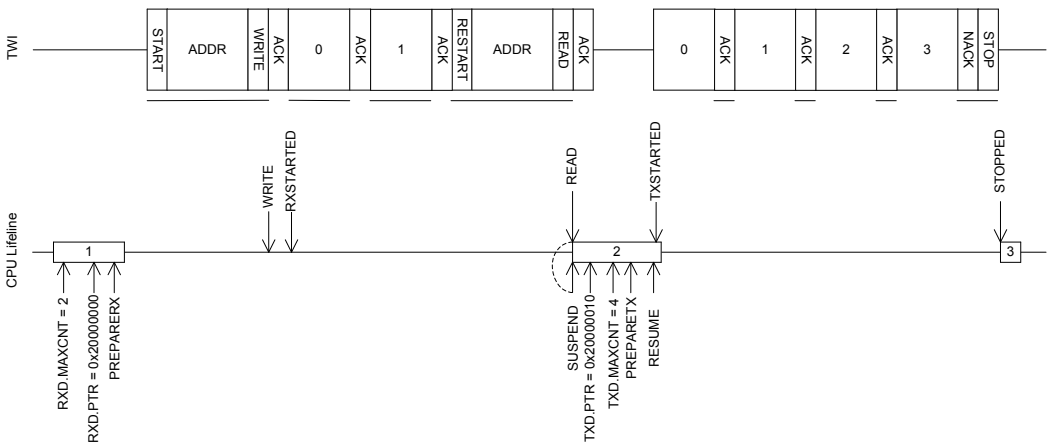

Figure 90: A repeated start sequence, where the TWI master writes two bytes followed by reading four bytes from the slave

34.6 Terminating an ongoing TWI transaction

In some situations, e.g. if the external TWI master is not responding correctly, it may be required to terminate an ongoing transaction.

This can be achieved by triggering the STOP task. In this situation a STOPPED event will be generated when the TWI has stopped independent of whether or not a STOP condition has been generated on the TWI bus. The TWI slave will release the bus when it has stopped and go back to its IDLE state.

34.7 Low power

When putting the system in low power and the peripheral is not needed, lowest possible power consumption is achieved by stopping, and then disabling the peripheral.

The STOP task may not be always needed (the peripheral might already be stopped), but if it is sent, software shall wait until the STOPPED event was received as a response before disabling the peripheral through the ENABLE register.

34.8 Slave mode pin configuration

The SCL and SDA signals associated with the TWI slave are mapped to physical pins according to the configuration specified in the PSEL.SCL and PSEL.SDA registers respectively.

The PSEL.SCL and PSEL.SDA registers and their configurations are only used as long as the TWI slave is enabled, and retained only as long as the device is in ON mode. When the peripheral is disabled, the pins will behave as regular GPIOs, and use the configuration in their respective OUT bit field and PIN_CNF[n] register. PSEL.SCL and PSEL.SDA must only be configured when the TWI slave is disabled.

To secure correct signal levels on the pins used by the TWI slave when the system is in OFF mode, and when the TWI slave is disabled, these pins must be configured in the GPIO peripheral as described in *Table 73: GPIO configuration before enabling peripheral* on page 320.

Only one peripheral can be assigned to drive a particular GPIO pin at a time. Failing to do so may result in unpredictable behavior.

Table 73: GPIO configuration before enabling peripheral

TWI slave signal	TWI slave pin	Direction	Output value	Drive strength
SCL	As specified in PSEL.SCL	Input	Not applicable	S0D1
SDA	As specified in PSEL.SDA	Input	Not applicable	S0D1

34.9 Registers

Table 74: Instances

Base address	Peripheral	Instance	Description	Configuration
0x40003000	TWIS	TWIS0	Two-wire interface slave 0	
0x40004000	TWIS	TWIS1	Two-wire interface slave 1	

Table 75: Register Overview

Register	Offset	Description
TASKS_STOP	0x014	Stop TWI transaction
TASKS_SUSPEND	0x01C	Suspend TWI transaction
TASKS_RESUME	0x020	Resume TWI transaction
TASKS_PREPARERX	0x030	Prepare the TWI slave to respond to a write command
TASKS_PREPARETX	0x034	Prepare the TWI slave to respond to a read command
EVENTS_STOPPED	0x104	TWI stopped
EVENTS_ERROR	0x124	TWI error
EVENTS_RXSTARTED	0x14C	Receive sequence started
EVENTS_TXSTARTED	0x150	Transmit sequence started
EVENTS_WRITE	0x164	Write command received
EVENTS_READ	0x168	Read command received
SHORTS	0x200	Shortcut register
INTEN	0x300	Enable or disable interrupt
INTENSET	0x304	Enable interrupt
INTENCLR	0x308	Disable interrupt
ERRORSRC	0x4D0	Error source
MATCH	0x4D4	Status register indicating which address had a match
ENABLE	0x500	Enable TWIS
PSEL.SCL	0x508	Pin select for SCL signal
PSEL.SDA	0x50C	Pin select for SDA signal
RXD.PTR	0x534	RXD Data pointer
RXD.MAXCNT	0x538	Maximum number of bytes in RXD buffer
RXD.AMOUNT	0x53C	Number of bytes transferred in the last RXD transaction
TXD.PTR	0x544	TXD Data pointer
TXD.MAXCNT	0x548	Maximum number of bytes in TXD buffer
TXD.AMOUNT	0x54C	Number of bytes transferred in the last TXD transaction
ADDRESS[0]	0x588	TWI slave address 0
ADDRESS[1]	0x58C	TWI slave address 1
CONFIG	0x594	Configuration register for the address match mechanism
ORC	0x5C0	Over-read character. Character sent out in case of an over-read of the transmit buffer.

34.9.1 SHORTS

Address offset: 0x200

Shortcut register

Bit number	31	30	29	28	27	26	25	24	23	22	21	20	19	18	17	16	15	14	13	12	11	10	9	8	7	6	5	4	3	2	1	0
Id																		B	A													
Reset 0x00000000	**0**	**0**	**0**	**0**	**0**	**0**	**0**	**0**	**0**	**0**	**0**	**0**	**0**	**0**	**0**	**0**	**0**	**0**	**0**	**0**	**0**	**0**	**0**	**0**	**0**	**0**	**0**	**0**	**0**	**0**	**0**	**0**

Id	RW	Field	Value Id	Value	Description
A	RW	WRITE_SUSPEND			Shortcut between WRITE event and SUSPEND task See *EVENTS_WRITE* and *TASKS_SUSPEND*
			Disabled	0	Disable shortcut
			Enabled	1	Enable shortcut
B	RW	READ_SUSPEND			Shortcut between READ event and SUSPEND task See *EVENTS_READ* and *TASKS_SUSPEND*

Bit number				31	30	29	28	27	26	25	24	23	22	21	20	19	18	17	16	15	14	13	12	11	10	9	8	7	6	5	4	3	2	1	0
Id																					B	A													
Reset 0x00000000				**0**	**0**	**0**	**0**	**0**	**0**	**0**	**0**	**0**	**0**	**0**	**0**	**0**	**0**	**0**	**0**	**0**	**0**	**0**	**0**	**0**	**0**	**0**	**0**	**0**	**0**	**0**	**0**	**0**	**0**	**0**	**0**
Id	**RW**	**Field**	**Value Id**	**Value**								**Description**																							
			Disabled	0								Disable shortcut																							
			Enabled	1								Enable shortcut																							

34.9.2 INTEN

Address offset: 0x300

Enable or disable interrupt

Bit number				31	30	29	28	27	26	25	24	23	22	21	20	19	18	17	16	15	14	13	12	11	10	9	8	7	6	5	4	3	2	1	0
Id									H	G					F	E										B								A	
Reset 0x00000000				**0**	**0**	**0**	**0**	**0**	**0**	**0**	**0**	**0**	**0**	**0**	**0**	**0**	**0**	**0**	**0**	**0**	**0**	**0**	**0**	**0**	**0**	**0**	**0**	**0**	**0**	**0**	**0**	**0**	**0**	**0**	**0**
Id	**RW**	**Field**	**Value Id**	**Value**								**Description**																							
A	RW	STOPPED										Enable or disable interrupt for STOPPED event See *EVENTS_STOPPED*																							
			Disabled	0								Disable																							
			Enabled	1								Enable																							
B	RW	ERROR										Enable or disable interrupt for ERROR event See *EVENTS_ERROR*																							
			Disabled	0								Disable																							
			Enabled	1								Enable																							
E	RW	RXSTARTED										Enable or disable interrupt for RXSTARTED event See *EVENTS_RXSTARTED*																							
			Disabled	0								Disable																							
			Enabled	1								Enable																							
F	RW	TXSTARTED										Enable or disable interrupt for TXSTARTED event See *EVENTS_TXSTARTED*																							
			Disabled	0								Disable																							
			Enabled	1								Enable																							
G	RW	WRITE										Enable or disable interrupt for WRITE event See *EVENTS_WRITE*																							
			Disabled	0								Disable																							
			Enabled	1								Enable																							
H	RW	READ										Enable or disable interrupt for READ event See *EVENTS_READ*																							
			Disabled	0								Disable																							
			Enabled	1								Enable																							

34.9.3 INTENSET

Address offset: 0x304

Enable interrupt

Bit number				31	30	29	28	27	26	25	24	23	22	21	20	19	18	17	16	15	14	13	12	11	10	9	8	7	6	5	4	3	2	1	0
Id									H	G					F	E										B								A	
Reset 0x00000000				**0**	**0**	**0**	**0**	**0**	**0**	**0**	**0**	**0**	**0**	**0**	**0**	**0**	**0**	**0**	**0**	**0**	**0**	**0**	**0**	**0**	**0**	**0**	**0**	**0**	**0**	**0**	**0**	**0**	**0**	**0**	**0**
Id	**RW**	**Field**	**Value Id**	**Value**								**Description**																							
A	RW	STOPPED										Write '1' to Enable interrupt for STOPPED event See *EVENTS_STOPPED*																							
			Set	1								Enable																							
			Disabled	0								Read: Disabled																							
			Enabled	1								Read: Enabled																							
B	RW	ERROR										Write '1' to Enable interrupt for ERROR event																							

Bit number				31	30	29	28	27	26	25	24	23	22	21	20	19	18	17	16	15	14	13	12	11	10	9	8	7	6	5	4	3	2	1	0
Id									H	G					F	E										B								A	
Reset 0x00000000				**0**	**0**	**0**	**0**	**0**	**0**	**0**	**0**	**0**	**0**	**0**	**0**	**0**	**0**	**0**	**0**	**0**	**0**	**0**	**0**	**0**	**0**	**0**	**0**	**0**	**0**	**0**	**0**	**0**	**0**	**0**	**0**
Id	**RW**	**Field**	**Value Id**	**Value**																						**Description**									
																										See *EVENTS_ERROR*									
			Set	1																						Enable									
			Disabled	0																						Read: Disabled									
			Enabled	1																						Read: Enabled									
E	RW	RXSTARTED																								Write '1' to Enable interrupt for RXSTARTED event See *EVENTS_RXSTARTED*									
			Set	1																						Enable									
			Disabled	0																						Read: Disabled									
			Enabled	1																						Read: Enabled									
F	RW	TXSTARTED																								Write '1' to Enable interrupt for TXSTARTED event See *EVENTS_TXSTARTED*									
			Set	1																						Enable									
			Disabled	0																						Read: Disabled									
			Enabled	1																						Read: Enabled									
G	RW	WRITE																								Write '1' to Enable interrupt for WRITE event See *EVENTS_WRITE*									
			Set	1																						Enable									
			Disabled	0																						Read: Disabled									
			Enabled	1																						Read: Enabled									
H	RW	READ																								Write '1' to Enable interrupt for READ event See *EVENTS_READ*									
			Set	1																						Enable									
			Disabled	0																						Read: Disabled									
			Enabled	1																						Read: Enabled									

34.9.4 INTENCLR

Address offset: 0x308

Disable interrupt

Bit number				31	30	29	28	27	26	25	24	23	22	21	20	19	18	17	16	15	14	13	12	11	10	9	8	7	6	5	4	3	2	1	0
Id									H	G					F	E										B								A	
Reset 0x00000000				**0**	**0**	**0**	**0**	**0**	**0**	**0**	**0**	**0**	**0**	**0**	**0**	**0**	**0**	**0**	**0**	**0**	**0**	**0**	**0**	**0**	**0**	**0**	**0**	**0**	**0**	**0**	**0**	**0**	**0**	**0**	**0**
Id	**RW**	**Field**	**Value Id**	**Value**																						**Description**									
A	RW	STOPPED																								Write '1' to Disable interrupt for STOPPED event See *EVENTS_STOPPED*									
			Clear	1																						Disable									
			Disabled	0																						Read: Disabled									
			Enabled	1																						Read: Enabled									
B	RW	ERROR																								Write '1' to Disable interrupt for ERROR event See *EVENTS_ERROR*									
			Clear	1																						Disable									
			Disabled	0																						Read: Disabled									
			Enabled	1																						Read: Enabled									
E	RW	RXSTARTED																								Write '1' to Disable interrupt for RXSTARTED event See *EVENTS_RXSTARTED*									
			Clear	1																						Disable									
			Disabled	0																						Read: Disabled									
			Enabled	1																						Read: Enabled									
F	RW	TXSTARTED																								Write '1' to Disable interrupt for TXSTARTED event See *EVENTS_TXSTARTED*									
			Clear	1																						Disable									

Bit number				31	30	29	28	27	26	25	24	23	22	21	20	19	18	17	16	15	14	13	12	11	10	9	8	7	6	5	4	3	2	1	0
Id									H	G					F	E										B								A	
Reset 0x00000000				**0**	**0**	**0**	**0**	**0**	**0**	**0**	**0**	**0**	**0**	**0**	**0**	**0**	**0**	**0**	**0**	**0**	**0**	**0**	**0**	**0**	**0**	**0**	**0**	**0**	**0**	**0**	**0**	**0**	**0**	**0**	**0**
Id	**RW**	**Field**	**Value Id**	**Value**																						**Description**									
			Disabled	0																						Read: Disabled									
			Enabled	1																						Read: Enabled									
G	RW	WRITE																								Write '1' to Disable interrupt for WRITE event See *EVENTS_WRITE*									
			Clear	1																						Disable									
			Disabled	0																						Read: Disabled									
			Enabled	1																						Read: Enabled									
H	RW	READ																								Write '1' to Disable interrupt for READ event See *EVENTS_READ*									
			Clear	1																						Disable									
			Disabled	0																						Read: Disabled									
			Enabled	1																						Read: Enabled									

34.9.5 ERRORSRC

Address offset: 0x4D0

Error source

Bit number				31	30	29	28	27	26	25	24	23	22	21	20	19	18	17	16	15	14	13	12	11	10	9	8	7	6	5	4	3	2	1	0
Id																																C	B		A
Reset 0x00000000				**0**	**0**	**0**	**0**	**0**	**0**	**0**	**0**	**0**	**0**	**0**	**0**	**0**	**0**	**0**	**0**	**0**	**0**	**0**	**0**	**0**	**0**	**0**	**0**	**0**	**0**	**0**	**0**	**0**	**0**	**0**	**0**
Id	**RW**	**Field**	**Value Id**	**Value**																						**Description**									
A	RW	OVERFLOW																								RX buffer overflow detected, and prevented									
			NotDetected	0																						Error did not occur									
			Detected	1																						Error occurred									
B	RW	DNACK																								NACK sent after receiving a data byte									
			NotReceived	0																						Error did not occur									
			Received	1																						Error occurred									
C	RW	OVERREAD																								TX buffer over-read detected, and prevented									
			NotDetected	0																						Error did not occur									
			Detected	1																						Error occurred									

34.9.6 MATCH

Address offset: 0x4D4

Status register indicating which address had a match

Bit number				31	30	29	28	27	26	25	24	23	22	21	20	19	18	17	16	15	14	13	12	11	10	9	8	7	6	5	4	3	2	1	0
Id																																			A
Reset 0x00000000				**0**	**0**	**0**	**0**	**0**	**0**	**0**	**0**	**0**	**0**	**0**	**0**	**0**	**0**	**0**	**0**	**0**	**0**	**0**	**0**	**0**	**0**	**0**	**0**	**0**	**0**	**0**	**0**	**0**	**0**	**0**	**0**
Id	**RW**	**Field**	**Value Id**	**Value**																						**Description**									
A	R	MATCH		[0..1]																						Which of the addresses in {ADDRESS} matched the incoming address									

34.9.7 ENABLE

Address offset: 0x500

Enable TWIS

Bit number				31	30	29	28	27	26	25	24	23	22	21	20	19	18	17	16	15	14	13	12	11	10	9	8	7	6	5	4	3	2	1	0
Id																																A	A	A	A
Reset 0x00000000				**0**	**0**	**0**	**0**	**0**	**0**	**0**	**0**	**0**	**0**	**0**	**0**	**0**	**0**	**0**	**0**	**0**	**0**	**0**	**0**	**0**	**0**	**0**	**0**	**0**	**0**	**0**	**0**	**0**	**0**	**0**	**0**
Id	**RW**	**Field**	**Value Id**	**Value**																						**Description**									
A	RW	ENABLE																								Enable or disable TWIS									
			Disabled	0																						Disable TWIS									

Bit number				31	30	29	28	27	26	25	24	23	22	21	20	19	18	17	16	15	14	13	12	11	10	9	8	7	6	5	4	3	2	1	0
Id																																A	A	A	A
Reset 0x00000000				**0**	**0**	**0**	**0**	**0**	**0**	**0**	**0**	**0**	**0**	**0**	**0**	**0**	**0**	**0**	**0**	**0**	**0**	**0**	**0**	**0**	**0**	**0**	**0**	**0**	**0**	**0**	**0**	**0**	**0**	**0**	**0**
Id	**RW**	**Field**	**Value Id**	**Value**								**Description**																							
			Enabled	9								Enable TWIS																							

34.9.8 PSEL.SCL

Address offset: 0x508

Pin select for SCL signal

Bit number				31	30	29	28	27	26	25	24	23	22	21	20	19	18	17	16	15	14	13	12	11	10	9	8	7	6	5	4	3	2	1	0
Id				C																											A	A	A	A	A
Reset 0xFFFFFFFF				**1**	**1**	**1**	**1**	**1**	**1**	**1**	**1**	**1**	**1**	**1**	**1**	**1**	**1**	**1**	**1**	**1**	**1**	**1**	**1**	**1**	**1**	**1**	**1**	**1**	**1**	**1**	**1**	**1**	**1**	**1**	**1**
Id	**RW**	**Field**	**Value Id**	**Value**								**Description**																							
A	RW	PIN		[0..31]								Pin number																							
C	RW	CONNECT										Connection																							
			Disconnected	1								Disconnect																							
			Connected	0								Connect																							

34.9.9 PSEL.SDA

Address offset: 0x50C

Pin select for SDA signal

Bit number				31	30	29	28	27	26	25	24	23	22	21	20	19	18	17	16	15	14	13	12	11	10	9	8	7	6	5	4	3	2	1	0
Id				C																											A	A	A	A	A
Reset 0xFFFFFFFF				**1**	**1**	**1**	**1**	**1**	**1**	**1**	**1**	**1**	**1**	**1**	**1**	**1**	**1**	**1**	**1**	**1**	**1**	**1**	**1**	**1**	**1**	**1**	**1**	**1**	**1**	**1**	**1**	**1**	**1**	**1**	**1**
Id	**RW**	**Field**	**Value Id**	**Value**								**Description**																							
A	RW	PIN		[0..31]								Pin number																							
C	RW	CONNECT										Connection																							
			Disconnected	1								Disconnect																							
			Connected	0								Connect																							

34.9.10 RXD.PTR

Address offset: 0x534

RXD Data pointer

Bit number				31	30	29	28	27	26	25	24	23	22	21	20	19	18	17	16	15	14	13	12	11	10	9	8	7	6	5	4	3	2	1	0
Id				A	A	A	A	A	A	A	A	A	A	A	A	A	A	A	A	A	A	A	A	A	A	A	A	A	A	A	A	A	A	A	A
Reset 0x00000000				**0**	**0**	**0**	**0**	**0**	**0**	**0**	**0**	**0**	**0**	**0**	**0**	**0**	**0**	**0**	**0**	**0**	**0**	**0**	**0**	**0**	**0**	**0**	**0**	**0**	**0**	**0**	**0**	**0**	**0**	**0**	**0**
Id	**RW**	**Field**	**Value Id**	**Value**								**Description**																							
A	RW	PTR										RXD Data pointer																							

34.9.11 RXD.MAXCNT

Address offset: 0x538

Maximum number of bytes in RXD buffer

Bit number				31	30	29	28	27	26	25	24	23	22	21	20	19	18	17	16	15	14	13	12	11	10	9	8	7	6	5	4	3	2	1	0
Id																												A	A	A	A	A	A	A	A
Reset 0x00000000				**0**	**0**	**0**	**0**	**0**	**0**	**0**	**0**	**0**	**0**	**0**	**0**	**0**	**0**	**0**	**0**	**0**	**0**	**0**	**0**	**0**	**0**	**0**	**0**	**0**	**0**	**0**	**0**	**0**	**0**	**0**	**0**
Id	**RW**	**Field**	**Value Id**	**Value**								**Description**																							
A	RW	MAXCNT										Maximum number of bytes in RXD buffer																							

34.9.12 RXD.AMOUNT

Address offset: 0x53C

Number of bytes transferred in the last RXD transaction

Bit number	31	30	29	28	27	26	25	24	23	22	21	20	19	18	17	16	15	14	13	12	11	10	9	8	7	6	5	4	3	2	1	0
Id																									A	A	A	A	A	A	A	A
Reset 0x00000000	**0**	**0**	**0**	**0**	**0**	**0**	**0**	**0**	**0**	**0**	**0**	**0**	**0**	**0**	**0**	**0**	**0**	**0**	**0**	**0**	**0**	**0**	**0**	**0**	**0**	**0**	**0**	**0**	**0**	**0**	**0**	**0**

Id	RW	Field	Value Id	Value	Description
A	R	AMOUNT			Number of bytes transferred in the last RXD transaction

34.9.13 TXD.PTR

Address offset: 0x544

TXD Data pointer

Bit number	31	30	29	28	27	26	25	24	23	22	21	20	19	18	17	16	15	14	13	12	11	10	9	8	7	6	5	4	3	2	1	0
Id	A	A	A	A	A	A	A	A	A	A	A	A	A	A	A	A	A	A	A	A	A	A	A	A	A	A	A	A	A	A	A	A
Reset 0x00000000	**0**	**0**	**0**	**0**	**0**	**0**	**0**	**0**	**0**	**0**	**0**	**0**	**0**	**0**	**0**	**0**	**0**	**0**	**0**	**0**	**0**	**0**	**0**	**0**	**0**	**0**	**0**	**0**	**0**	**0**	**0**	**0**

Id	RW	Field	Value Id	Value	Description
A	RW	PTR			TXD Data pointer

34.9.14 TXD.MAXCNT

Address offset: 0x548

Maximum number of bytes in TXD buffer

Bit number	31	30	29	28	27	26	25	24	23	22	21	20	19	18	17	16	15	14	13	12	11	10	9	8	7	6	5	4	3	2	1	0
Id																									A	A	A	A	A	A	A	A
Reset 0x00000000	**0**	**0**	**0**	**0**	**0**	**0**	**0**	**0**	**0**	**0**	**0**	**0**	**0**	**0**	**0**	**0**	**0**	**0**	**0**	**0**	**0**	**0**	**0**	**0**	**0**	**0**	**0**	**0**	**0**	**0**	**0**	**0**

Id	RW	Field	Value Id	Value	Description
A	RW	MAXCNT			Maximum number of bytes in TXD buffer

34.9.15 TXD.AMOUNT

Address offset: 0x54C

Number of bytes transferred in the last TXD transaction

Bit number	31	30	29	28	27	26	25	24	23	22	21	20	19	18	17	16	15	14	13	12	11	10	9	8	7	6	5	4	3	2	1	0
Id																									A	A	A	A	A	A	A	A
Reset 0x00000000	**0**	**0**	**0**	**0**	**0**	**0**	**0**	**0**	**0**	**0**	**0**	**0**	**0**	**0**	**0**	**0**	**0**	**0**	**0**	**0**	**0**	**0**	**0**	**0**	**0**	**0**	**0**	**0**	**0**	**0**	**0**	**0**

Id	RW	Field	Value Id	Value	Description
A	R	AMOUNT			Number of bytes transferred in the last TXD transaction

34.9.16 ADDRESS[0]

Address offset: 0x588

TWI slave address 0

Bit number	31	30	29	28	27	26	25	24	23	22	21	20	19	18	17	16	15	14	13	12	11	10	9	8	7	6	5	4	3	2	1	0
Id																										A	A	A	A	A	A	A
Reset 0x00000000	**0**	**0**	**0**	**0**	**0**	**0**	**0**	**0**	**0**	**0**	**0**	**0**	**0**	**0**	**0**	**0**	**0**	**0**	**0**	**0**	**0**	**0**	**0**	**0**	**0**	**0**	**0**	**0**	**0**	**0**	**0**	**0**

Id	RW	Field	Value Id	Value	Description
A	RW	ADDRESS			TWI slave address

34.9.17 ADDRESS[1]

Address offset: 0x58C

TWI slave address 1

Bit number	31	30	29	28	27	26	25	24	23	22	21	20	19	18	17	16	15	14	13	12	11	10	9	8	7	6	5	4	3	2	1	0
Id																										A	A	A	A	A	A	A
Reset 0x00000000	**0**	**0**	**0**	**0**	**0**	**0**	**0**	**0**	**0**	**0**	**0**	**0**	**0**	**0**	**0**	**0**	**0**	**0**	**0**	**0**	**0**	**0**	**0**	**0**	**0**	**0**	**0**	**0**	**0**	**0**	**0**	**0**

Id	RW	Field	Value Id	Value	Description
A	RW	ADDRESS			TWI slave address

34.9.18 CONFIG

Address offset: 0x594

Configuration register for the address match mechanism

Bit number	31	30	29	28	27	26	25	24	23	22	21	20	19	18	17	16	15	14	13	12	11	10	9	8	7	6	5	4	3	2	1	0
Id																															B	A
Reset 0x00000001	**0**	**0**	**0**	**0**	**0**	**0**	**0**	**0**	**0**	**0**	**0**	**0**	**0**	**0**	**0**	**0**	**0**	**0**	**0**	**0**	**0**	**0**	**0**	**0**	**0**	**0**	**0**	**0**	**0**	**0**	**0**	**1**

Id	RW	Field	Value Id	Value	Description
A	RW	ADDRESS0			Enable or disable address matching on ADDRESS[0]
			Disabled	0	Disabled
			Enabled	1	Enabled
B	RW	ADDRESS1			Enable or disable address matching on ADDRESS[1]
			Disabled	0	Disabled
			Enabled	1	Enabled

34.9.19 ORC

Address offset: 0x5C0

Over-read character. Character sent out in case of an over-read of the transmit buffer.

Bit number	31	30	29	28	27	26	25	24	23	22	21	20	19	18	17	16	15	14	13	12	11	10	9	8	7	6	5	4	3	2	1	0
Id																									A	A	A	A	A	A	A	A
Reset 0x00000000	**0**	**0**	**0**	**0**	**0**	**0**	**0**	**0**	**0**	**0**	**0**	**0**	**0**	**0**	**0**	**0**	**0**	**0**	**0**	**0**	**0**	**0**	**0**	**0**	**0**	**0**	**0**	**0**	**0**	**0**	**0**	**0**

Id	RW	Field	Value Id	Value	Description
A	RW	ORC			Over-read character. Character sent out in case of an over-read of the transmit buffer.

34.10 Electrical Specification

34.10.1 TWIS slave interface electrical specifications

Symbol	Description	Min.	Typ.	Max.	Units
f_{TWIS}	Bit rates for TWIS[30]	100		400	kbps
$I_{TWIS,100kbps}$	Run current for TWIS (Average current to receive and transfer a byte to RAM), 100 kbps		45		µA
$I_{TWIS,400kbps}$	Run current for TWIS (Average current to receive and transfer a byte to RAM), 400 kbps		45		µA
$I_{TWIS,IDLE}$	Idle current for TWIS		1		µA
$t_{TWIS,START,LP}$	Time from PREPARERX/PREPARETX task to ready to receive/ transmit, Low power mode		$t_{TWIS,START,}$ + t_{START_HFIN}		µs
$t_{TWIS,START,CL}$	Time from PREPARERX/PREPARETX task to ready to receive/ transmit, Constant latency mode		1.5		µs

34.10.2 TWIS slave timing specifications

Symbol	Description	Min.	Typ.	Max.	Units
$f_{TWIS,SCL,400kbps}$	SCL clock frequency, 400 kbps			400	kHz
t_{TWIS,SU_DAT}	Data setup time before positive edge on SCL – all modes	300			ns
t_{TWIS,HD_DAT}	Data hold time after negative edge on SCL – all modes	500			ns
$t_{TWIS,HD\_STA,100kbps}$	TWI slave hold time from for START condition (SDA low to SCL low), 100 kbps	5200			ns
$t_{TWIS,HD\_STA,400kbps}$	TWI slave hold time from for START condition (SDA low to SCL low), 400 kbps	1300			ns

30 Higher bit rates or stronger pull-ups may require GPIOs to be set as High Drive, see GPIO chapter for more details.

Symbol	Description	Min.	Typ.	Max.	Units
$t_{TWIS,SU\_STO,100kbps}$	TWI slave setup time from SCL high to STOP condition, 100 kbps	5200			ns
$t_{TWIS,SU\_STO,400kbps}$	TWI slave setup time from SCL high to STOP condition, 400 kbps	1300			ns
$t_{TWIS,BUF,100kbps}$	TWI slave bus free time between STOP and START conditions, 100 kbps		4700		ns
$t_{TWIS,BUF,400kbps}$	TWI slave bus free time between STOP and START conditions, 400 kbps		1300		ns

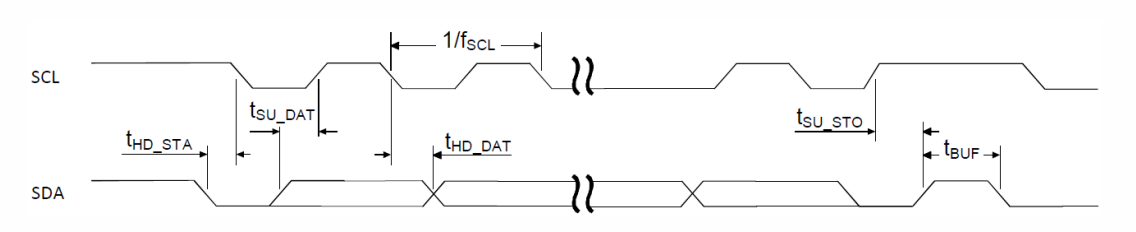

Figure 91: TWIS timing diagram, 1 byte transaction

35 UARTE — Universal asynchronous receiver/ transmitter with EasyDMA

The Universal asynchronous receiver/transmitter with EasyDMA (UARTE) offers fast, full-duplex, asynchronous serial communication with built-in flow control (CTS, RTS) support in hardware at a rate up to 1 Mbps, and EasyDMA data transfer from/to RAM.

Listed here are the main features for UARTE:

- Full-duplex operation
- Automatic hardware flow control
- Parity checking and generation for the 9th data bit
- EasyDMA
- Up to 1 Mbps baudrate
- Return to IDLE between transactions supported (when using HW flow control)
- One stop bit
- Least significant bit (LSB) first

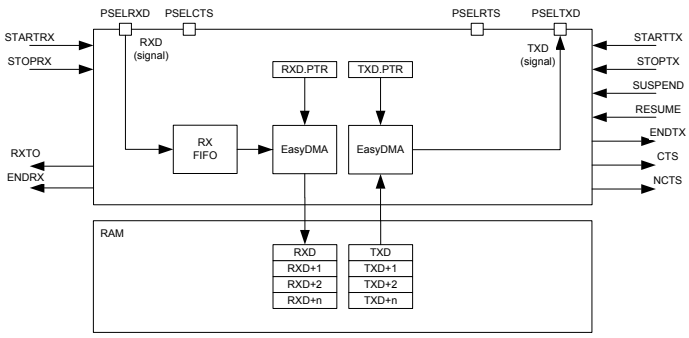

Figure 92: UARTE configuration

The GPIOs used for each UART interface can be chosen from any GPIO on the device and are independently configurable. This enables great flexibility in device pinout and efficient use of board space and signal routing.

35.1 Shared resources

The UARTE shares registers and other resources with other peripherals that have the same ID as the UARTE.

Therefore, you must disable all peripherals that have the same ID as the UARTE before the UARTE can be configured and used. Disabling a peripheral that has the same ID as the UARTE will not reset any of the registers that are shared with the UARTE. It is therefore important to configure all relevant UARTE registers explicitly to ensure that it operates correctly.

See the Instantiation table in *Instantiation* on page 21 for details on peripherals and their IDs.

35.2 EasyDMA

The UARTE implements EasyDMA for reading and writing to and from the RAM.

If the TXD.PTR and the RXD.PTR are not pointing to the Data RAM region, an EasyDMA transfer may result in a HardFault or RAM corruption. See *Memory* on page 20 for more information about the different memory regions.

The .PTR and .MAXCNT registers are double-buffered. They can be updated and prepared for the next RX/TX transmission immediately after having received the RXSTARTED/TXSTARTED event.

The ENDRX/ENDTX event indicates that EasyDMA has finished accessing respectively the RX/TX buffer in RAM.

35.3 Transmission

The first step of a DMA transmission is storing bytes in the transmit buffer and configuring EasyDMA. This is achieved by writing the initial address pointer to TXD.PTR, and the number of bytes in the RAM buffer to TXD.MAXCNT. The UARTE transmission is started by triggering the STARTTX task.

When all bytes in the TXD buffer, as specified in the TXD.MAXCNT register, have been transmitted, the UARTE transmission will end automatically and an ENDTX event will be generated.

A UARTE transmission sequence is stopped by triggering the STOPTX task, a TXSTOPPED event will be generated when the UARTE transmitter has stopped.

If the ENDTX event has not already been generated when the UARTE transmitter has come to a stop, the UARTE will generate the ENDTX event explicitly even though all bytes in the TXD buffer, as specified in the TXD.MAXCNT register, have not been transmitted.

If flow control is enabled, a transmission will be automatically suspended when CTS is deactivated and resumed when CTS is activated again, as illustrated in *Figure 93: UARTE transmission* on page 330.
A byte that is in transmission when CTS is deactivated will be fully transmitted before the transmission is suspended.

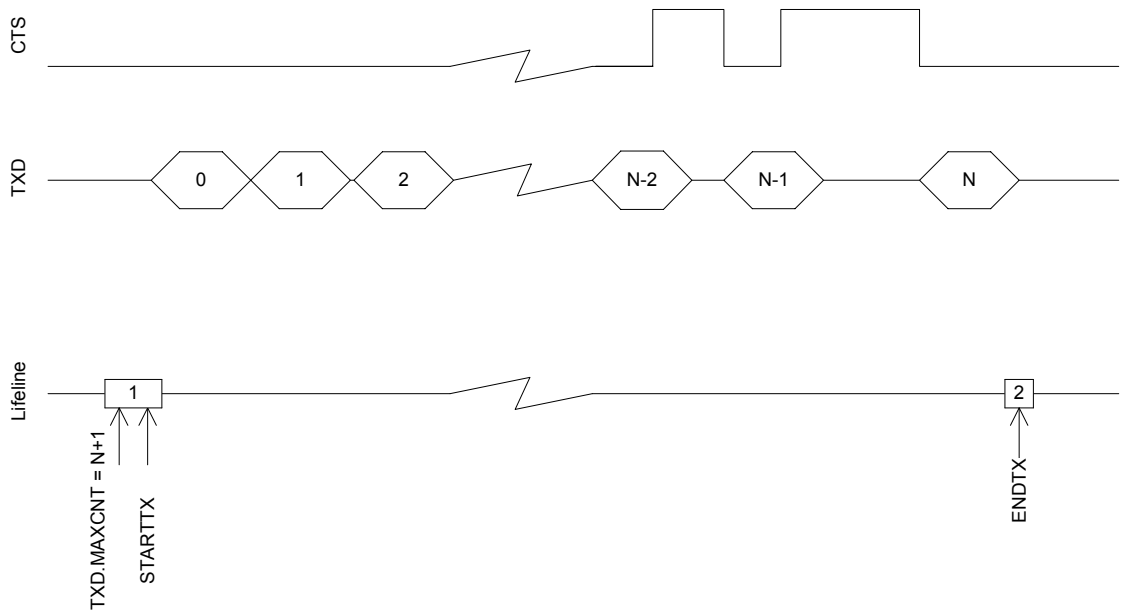

Figure 93: UARTE transmission

The UARTE transmitter will be in its lowest activity level, and consume the least amount of energy, when it is stopped, i.e. before it is started via STARTTX or after it has been stopped via STOPTX and the TXSTOPPED event has been generated. See *POWER — Power supply* on page 76 for more information about power modes.

35.4 Reception

The UARTE receiver is started by triggering the STARTRX task. The UARTE receiver is using EasyDMA to store incoming data in an RX buffer in RAM.

The RX buffer is located at the address specified in the RXD.PTR register. The RXD.PTR register is double-buffered and it can be updated and prepared for the next STARTRX task immediately after the RXSTARTED event is generated. The size of the RX buffer is specified in the RXD.MAXCNT register and the UARTE will generate an ENDRX event when it has filled up the RX buffer, see *Figure 94: UARTE reception* on page 331.

The RXD.AMOUNT register can be queried following an ENDRX event to see how many new bytes have been transferred to the RX buffer in RAM since the previous ENDRX event.

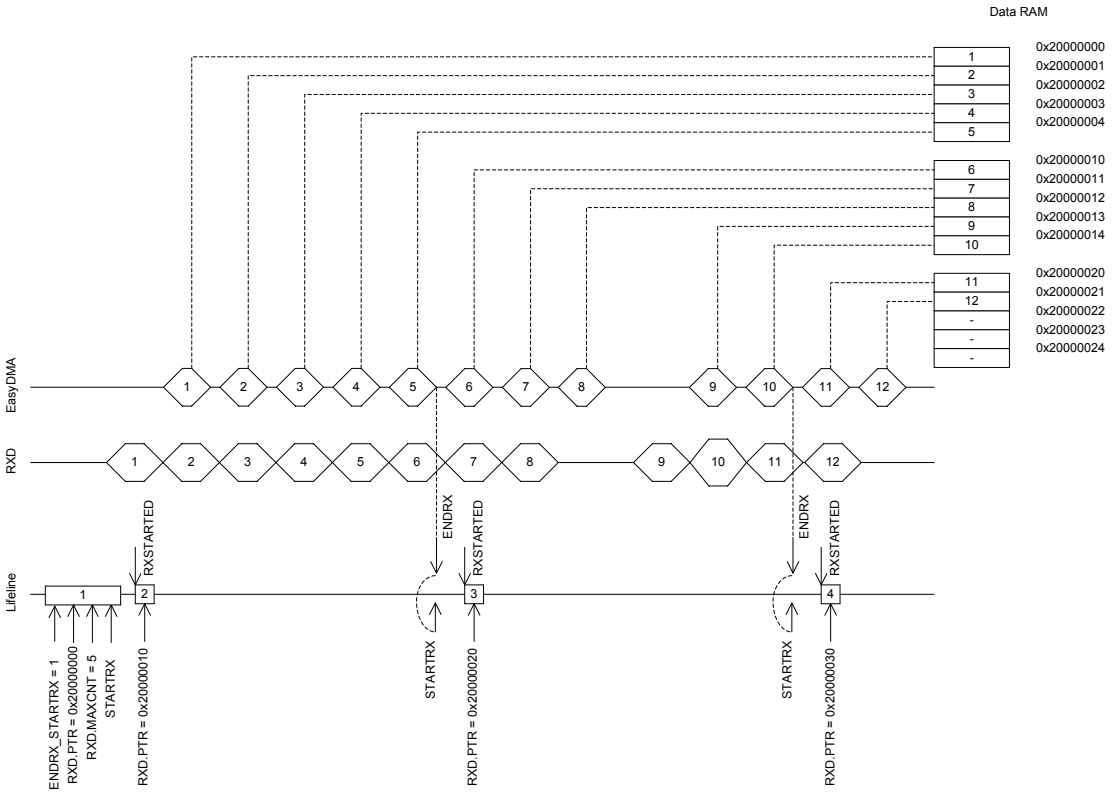

Figure 94: UARTE reception

The UARTE receiver is stopped by triggering the STOPRX task. An RXTO event is generated when the UARTE has stopped. The UARTE will make sure that an impending ENDRX event will be generated before the RXTO event is generated. This means that the UARTE will guarantee that no ENDRX event will be generated after RXTO, unless the UARTE is restarted or a FLUSHRX command is issued after the RXTO event is generated.

> **Important:** If the ENDRX event has not already been generated when the UARTE receiver has come to a stop, which implies that all pending content in the RX FIFO has been moved to the RX buffer, the UARTE will generate the ENDRX event explicitly even though the RX buffer is not full. In this scenario the ENDRX event will be generated before the RXTO event is generated.

To be able to know how many bytes have actually been received into the RX buffer, the CPU can read the RXD.AMOUNT register following the ENDRX event or the RXTO event.

The UARTE is able to receive up to four bytes after the STOPRX task has been triggered as long as these are sent in succession immediately after the RTS signal is deactivated. This is possible because after the RTS is deactivated the UARTE is able to receive bytes for an extended period equal to the time it takes to send 4 bytes on the configured baud rate.

After the RXTO event is generated the internal RX FIFO may still contain data, and to move this data to RAM the FLUSHRX task must be triggered. To make sure that this data does not overwrite data in the RX buffer, the RX buffer should be emptied or the RXD.PTR should be updated before the FLUSHRX task is triggered. To make sure that all data in the RX FIFO is moved to the RX buffer, the RXD.MAXCNT register must be set to RXD.MAXCNT > 4, see *Figure 95: UARTE reception with forced stop via STOPRX* on page 332. The UARTE will generate the ENDRX event after completing the FLUSHRX task even if the RX FIFO was empty

or if the RX buffer does not get filled up. To be able to know how many bytes have actually been received into the RX buffer in this case, the CPU can read the RXD.AMOUNT register following the ENDRX event.

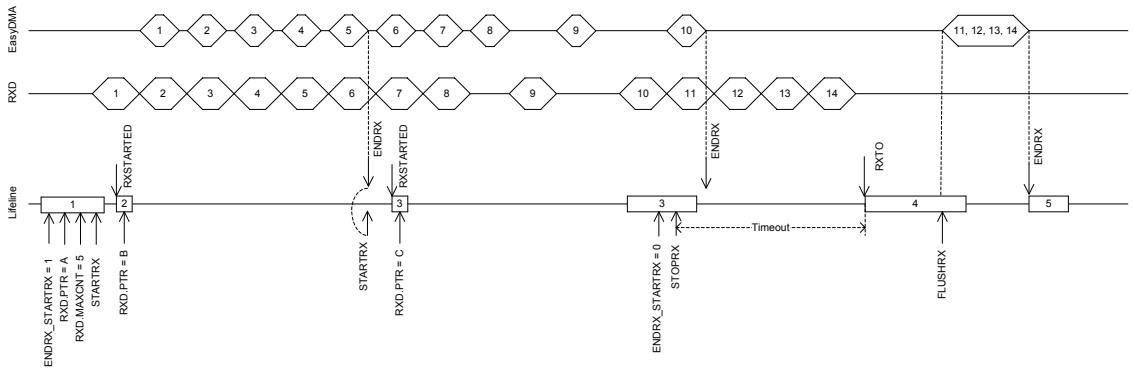

Figure 95: UARTE reception with forced stop via STOPRX

If HW flow control is enabled the RTS signal will be deactivated when the receiver is stopped via the STOPRX task or when the UARTE is only able to receive four more bytes in its internal RX FIFO.

With flow control disabled, the UARTE will function in the same way as when the flow control is enabled except that the RTS line will not be used. This means that no signal will be generated when the UARTE has reached the point where it is only able to receive four more bytes in its internal RX FIFO. Data received when the internal RX FIFO is filled up, will be lost.

The UARTE receiver will be in its lowest activity level, and consume the least amount of energy, when it is stopped, i.e. before it is started via STARTRX or after it has been stopped via STOPRX and the RXTO event has been generated. See *POWER — Power supply* on page 76 for more information about power modes.

35.5 Error conditions

An ERROR event, in the form of a framing error, will be generated if a valid stop bit is not detected in a frame. Another ERROR event, in the form of a break condition, will be generated if the RXD line is held active low for longer than the length of a data frame. Effectively, a framing error is always generated before a break condition occurs.

An ERROR event will not stop reception. If the error was a parity error, the received byte will still be transferred into Data RAM, and so will following incoming bytes. If there was a framing error (wrong stop bit), that specific byte will NOT be stored into Data RAM, but following incoming bytes will.

35.6 Using the UARTE without flow control

If flow control is not enabled, the interface will behave as if the CTS and RTS lines are kept active all the time.

35.7 Parity configuration

When parity is enabled, the parity will be generated automatically from the even parity of TXD and RXD for transmission and reception respectively.

35.8 Low power

When putting the system in low power and the peripheral is not needed, lowest possible power consumption is achieved by stopping, and then disabling the peripheral.

The STOPTX and STOPRX tasks may not be always needed (the peripheral might already be stopped), but if STOPTX and/or STOPRX is sent, software shall wait until the TXSTOPPED and/or RXTO event is received in response, before disabling the peripheral through the ENABLE register.

35.9 Pin configuration

The different signals RXD, CTS (Clear To Send, active low), RTS (Request To Send, active low), and TXD associated with the UARTE are mapped to physical pins according to the configuration specified in the PSEL.RXD, PSEL.CTS, PSEL.RTS, and PSEL.TXD registers respectively.

The PSEL.RXD, PSEL.CTS, PSEL.RTS, and PSEL.TXD registers and their configurations are only used as long as the UARTE is enabled, and retained only for the duration the device is in ON mode. PSEL.RXD, PSEL.RTS, PSEL.RTS and PSEL.TXD must only be configured when the UARTE is disabled.

To secure correct signal levels on the pins by the UARTE when the system is in OFF mode, the pins must be configured in the GPIO peripheral as described in *Table 76: GPIO configuration before enabling peripheral* on page 333.

Only one peripheral can be assigned to drive a particular GPIO pin at a time. Failing to do so may result in unpredictable behavior.

Table 76: GPIO configuration before enabling peripheral

UARTE signal	UARTE pin	Direction	Output value	Comments
RXD	As specified in PSEL.RXD	Input	Not applicable	
CTS	As specified in PSEL.CTS	Input	Not applicable	
RTS	As specified in PSEL.RTS	Output	1	
TXD	As specified in PSEL.TXD	Output	1	

35.10 Registers

Table 77: Instances

Base address	Peripheral	Instance	Description	Configuration
0x40002000	UARTE	UARTE0	Universal Asynchronous Receiver/ Transmitter with EasyDMA	

Table 78: Register Overview

Register	Offset	Description
TASKS_STARTRX	0x000	Start UART receiver
TASKS_STOPRX	0x004	Stop UART receiver
TASKS_STARTTX	0x008	Start UART transmitter
TASKS_STOPTX	0x00C	Stop UART transmitter
TASKS_FLUSHRX	0x02C	Flush RX FIFO into RX buffer
EVENTS_CTS	0x100	CTS is activated (set low). Clear To Send.
EVENTS_NCTS	0x104	CTS is deactivated (set high). Not Clear To Send.
EVENTS_ENDRX	0x110	Receive buffer is filled up
EVENTS_ENDTX	0x120	Last TX byte transmitted
EVENTS_ERROR	0x124	Error detected
EVENTS_RXTO	0x144	Receiver timeout
EVENTS_RXSTARTED	0x14C	UART receiver has started
EVENTS_TXSTARTED	0x150	UART transmitter has started
EVENTS_TXSTOPPED	0x158	Transmitter stopped
SHORTS	0x200	Shortcut register
INTEN	0x300	Enable or disable interrupt
INTENSET	0x304	Enable interrupt
INTENCLR	0x308	Disable interrupt
ERRORSRC	0x480	Error source
ENABLE	0x500	Enable UART

Register	Offset	Description
PSEL.RTS	0x508	Pin select for RTS signal
PSEL.TXD	0x50C	Pin select for TXD signal
PSEL.CTS	0x510	Pin select for CTS signal
PSEL.RXD	0x514	Pin select for RXD signal
BAUDRATE	0x524	Baud rate
RXD.PTR	0x534	Data pointer
RXD.MAXCNT	0x538	Maximum number of bytes in receive buffer
RXD.AMOUNT	0x53C	Number of bytes transferred in the last transaction
TXD.PTR	0x544	Data pointer
TXD.MAXCNT	0x548	Maximum number of bytes in transmit buffer
TXD.AMOUNT	0x54C	Number of bytes transferred in the last transaction
CONFIG	0x56C	Configuration of parity and hardware flow control

35.10.1 SHORTS

Address offset: 0x200

Shortcut register

Bit number				31	30	29	28	27	26	25	24	23	22	21	20	19	18	17	16	15	14	13	12	11	10	9	8	7	6	5	4	3	2	1	0
Id																													D	C					
Reset 0x00000000				**0**	**0**	**0**	**0**	**0**	**0**	**0**	**0**	**0**	**0**	**0**	**0**	**0**	**0**	**0**	**0**	**0**	**0**	**0**	**0**	**0**	**0**	**0**	**0**	**0**	**0**	**0**	**0**	**0**	**0**	**0**	**0**
Id	**RW**	**Field**	**Value Id**	**Value**																															
C	RW	ENDRX_STARTRX																																	
			Disabled	0																															
			Enabled	1																															
D	RW	ENDRX_STOPRX																																	
			Disabled	0																															
			Enabled	1																															

Shortcut between ENDRX event and STARTRX task

See *EVENTS_ENDRX* and *TASKS_STARTRX*

Disable shortcut

Enable shortcut

Shortcut between ENDRX event and STOPRX task

See *EVENTS_ENDRX* and *TASKS_STOPRX*

Disable shortcut

Enable shortcut

35.10.2 INTEN

Address offset: 0x300

Enable or disable interrupt

Bit number				31	30	29	28	27	26	25	24	23	22	21	20	19	18	17	16	15	14	13	12	11	10	9	8	7	6	5	4	3	2	1	0
Id													J		H	G		F								E	D				C			B	A
Reset 0x00000000				**0**	**0**	**0**	**0**	**0**	**0**	**0**	**0**	**0**	**0**	**0**	**0**	**0**	**0**	**0**	**0**	**0**	**0**	**0**	**0**	**0**	**0**	**0**	**0**	**0**	**0**	**0**	**0**	**0**	**0**	**0**	**0**
Id	**RW**	**Field**	**Value Id**	**Value**																															
A	RW	CTS																																	
			Disabled	0																															
			Enabled	1																															
B	RW	NCTS																																	
			Disabled	0																															
			Enabled	1																															
C	RW	ENDRX																																	
			Disabled	0																															
			Enabled	1																															
D	RW	ENDTX																																	
			Disabled	0																															
			Enabled	1																															

Enable or disable interrupt for CTS event

See *EVENTS_CTS*

Disable

Enable

Enable or disable interrupt for NCTS event

See *EVENTS_NCTS*

Disable

Enable

Enable or disable interrupt for ENDRX event

See *EVENTS_ENDRX*

Disable

Enable

Enable or disable interrupt for ENDTX event

See *EVENTS_ENDTX*

Disable

Enable

Bit number				31	30	29	28	27	26	25	24	23	22	21	20	19	18	17	16	15	14	13	12	11	10	9	8	7	6	5	4	3	2	1	0
Id													J		H	G		F								E	D				C			B	A
Reset 0x00000000				**0**	**0**	**0**	**0**	**0**	**0**	**0**	**0**	**0**	**0**	**0**	**0**	**0**	**0**	**0**	**0**	**0**	**0**	**0**	**0**	**0**	**0**	**0**	**0**	**0**	**0**	**0**	**0**	**0**	**0**	**0**	**0**
Id	**RW**	**Field**	**Value Id**	**Value**								**Description**																							
E	RW	ERROR										Enable or disable interrupt for ERROR event See *EVENTS_ERROR*																							
			Disabled	0								Disable																							
			Enabled	1								Enable																							
F	RW	RXTO										Enable or disable interrupt for RXTO event See *EVENTS_RXTO*																							
			Disabled	0								Disable																							
			Enabled	1								Enable																							
G	RW	RXSTARTED										Enable or disable interrupt for RXSTARTED event See *EVENTS_RXSTARTED*																							
			Disabled	0								Disable																							
			Enabled	1								Enable																							
H	RW	TXSTARTED										Enable or disable interrupt for TXSTARTED event See *EVENTS_TXSTARTED*																							
			Disabled	0								Disable																							
			Enabled	1								Enable																							
J	RW	TXSTOPPED										Enable or disable interrupt for TXSTOPPED event See *EVENTS_TXSTOPPED*																							
			Disabled	0								Disable																							
			Enabled	1								Enable																							

35.10.3 INTENSET

Address offset: 0x304

Enable interrupt

Bit number				31	30	29	28	27	26	25	24	23	22	21	20	19	18	17	16	15	14	13	12	11	10	9	8	7	6	5	4	3	2	1	0
Id													J		H	G		F								E	D				C			B	A
Reset 0x00000000				**0**	**0**	**0**	**0**	**0**	**0**	**0**	**0**	**0**	**0**	**0**	**0**	**0**	**0**	**0**	**0**	**0**	**0**	**0**	**0**	**0**	**0**	**0**	**0**	**0**	**0**	**0**	**0**	**0**	**0**	**0**	**0**
Id	**RW**	**Field**	**Value Id**	**Value**								**Description**																							
A	RW	CTS										Write '1' to Enable interrupt for CTS event See *EVENTS_CTS*																							
			Set	1								Enable																							
			Disabled	0								Read: Disabled																							
			Enabled	1								Read: Enabled																							
B	RW	NCTS										Write '1' to Enable interrupt for NCTS event See *EVENTS_NCTS*																							
			Set	1								Enable																							
			Disabled	0								Read: Disabled																							
			Enabled	1								Read: Enabled																							
C	RW	ENDRX										Write '1' to Enable interrupt for ENDRX event See *EVENTS_ENDRX*																							
			Set	1								Enable																							
			Disabled	0								Read: Disabled																							
			Enabled	1								Read: Enabled																							
D	RW	ENDTX										Write '1' to Enable interrupt for ENDTX event See *EVENTS_ENDTX*																							
			Set	1								Enable																							
			Disabled	0								Read: Disabled																							
			Enabled	1								Read: Enabled																							
E	RW	ERROR										Write '1' to Enable interrupt for ERROR event																							

Bit number				31	30	29	28	27	26	25	24	23	22	21	20	19	18	17	16	15	14	13	12	11	10	9	8	7	6	5	4	3	2	1	0
Id													J		H	G		F								E	D				C			B	A
Reset 0x00000000				**0**	**0**	**0**	**0**	**0**	**0**	**0**	**0**	**0**	**0**	**0**	**0**	**0**	**0**	**0**	**0**	**0**	**0**	**0**	**0**	**0**	**0**	**0**	**0**	**0**	**0**	**0**	**0**	**0**	**0**	**0**	**0**
Id	**RW**	**Field**	**Value Id**	**Value**								**Description**																							
												See *EVENTS_ERROR*																							
			Set	1								Enable																							
			Disabled	0								Read: Disabled																							
			Enabled	1								Read: Enabled																							
F	RW	RXTO										Write '1' to Enable interrupt for RXTO event See *EVENTS_RXTO*																							
			Set	1								Enable																							
			Disabled	0								Read: Disabled																							
			Enabled	1								Read: Enabled																							
G	RW	RXSTARTED										Write '1' to Enable interrupt for RXSTARTED event See *EVENTS_RXSTARTED*																							
			Set	1								Enable																							
			Disabled	0								Read: Disabled																							
			Enabled	1								Read: Enabled																							
H	RW	TXSTARTED										Write '1' to Enable interrupt for TXSTARTED event See *EVENTS_TXSTARTED*																							
			Set	1								Enable																							
			Disabled	0								Read: Disabled																							
			Enabled	1								Read: Enabled																							
J	RW	TXSTOPPED										Write '1' to Enable interrupt for TXSTOPPED event See *EVENTS_TXSTOPPED*																							
			Set	1								Enable																							
			Disabled	0								Read: Disabled																							
			Enabled	1								Read: Enabled																							

35.10.4 INTENCLR

Address offset: 0x308

Disable interrupt

Bit number				31	30	29	28	27	26	25	24	23	22	21	20	19	18	17	16	15	14	13	12	11	10	9	8	7	6	5	4	3	2	1	0
Id													J		H	G		F								E	D				C			B	A
Reset 0x00000000				**0**	**0**	**0**	**0**	**0**	**0**	**0**	**0**	**0**	**0**	**0**	**0**	**0**	**0**	**0**	**0**	**0**	**0**	**0**	**0**	**0**	**0**	**0**	**0**	**0**	**0**	**0**	**0**	**0**	**0**	**0**	**0**
Id	**RW**	**Field**	**Value Id**	**Value**								**Description**																							
A	RW	CTS										Write '1' to Disable interrupt for CTS event See *EVENTS_CTS*																							
			Clear	1								Disable																							
			Disabled	0								Read: Disabled																							
			Enabled	1								Read: Enabled																							
B	RW	NCTS										Write '1' to Disable interrupt for NCTS event See *EVENTS_NCTS*																							
			Clear	1								Disable																							
			Disabled	0								Read: Disabled																							
			Enabled	1								Read: Enabled																							
C	RW	ENDRX										Write '1' to Disable interrupt for ENDRX event See *EVENTS_ENDRX*																							
			Clear	1								Disable																							
			Disabled	0								Read: Disabled																							
			Enabled	1								Read: Enabled																							
D	RW	ENDTX										Write '1' to Disable interrupt for ENDTX event See *EVENTS_ENDTX*																							
			Clear	1								Disable																							

Bit number				31	30	29	28	27	26	25	24	23	22	21	20	19	18	17	16	15	14	13	12	11	10	9	8	7	6	5	4	3	2	1	0
Id													J		H	G		F								E	D				C			B	A
Reset 0x00000000				**0**	**0**	**0**	**0**	**0**	**0**	**0**	**0**	**0**	**0**	**0**	**0**	**0**	**0**	**0**	**0**	**0**	**0**	**0**	**0**	**0**	**0**	**0**	**0**	**0**	**0**	**0**	**0**	**0**	**0**	**0**	**0**
Id	**RW**	**Field**	**Value Id**	**Value**								**Description**																							
			Disabled	0								Read: Disabled																							
			Enabled	1								Read: Enabled																							
E	RW	ERROR										Write '1' to Disable interrupt for ERROR event See *EVENTS_ERROR*																							
			Clear	1								Disable																							
			Disabled	0								Read: Disabled																							
			Enabled	1								Read: Enabled																							
F	RW	RXTO										Write '1' to Disable interrupt for RXTO event See *EVENTS_RXTO*																							
			Clear	1								Disable																							
			Disabled	0								Read: Disabled																							
			Enabled	1								Read: Enabled																							
G	RW	RXSTARTED										Write '1' to Disable interrupt for RXSTARTED event See *EVENTS_RXSTARTED*																							
			Clear	1								Disable																							
			Disabled	0								Read: Disabled																							
			Enabled	1								Read: Enabled																							
H	RW	TXSTARTED										Write '1' to Disable interrupt for TXSTARTED event See *EVENTS_TXSTARTED*																							
			Clear	1								Disable																							
			Disabled	0								Read: Disabled																							
			Enabled	1								Read: Enabled																							
J	RW	TXSTOPPED										Write '1' to Disable interrupt for TXSTOPPED event See *EVENTS_TXSTOPPED*																							
			Clear	1								Disable																							
			Disabled	0								Read: Disabled																							
			Enabled	1								Read: Enabled																							

35.10.5 ERRORSRC

Address offset: 0x480

Error source

Bit number				31	30	29	28	27	26	25	24	23	22	21	20	19	18	17	16	15	14	13	12	11	10	9	8	7	6	5	4	3	2	1	0
Id																																D	C	B	A
Reset 0x00000000				**0**	**0**	**0**	**0**	**0**	**0**	**0**	**0**	**0**	**0**	**0**	**0**	**0**	**0**	**0**	**0**	**0**	**0**	**0**	**0**	**0**	**0**	**0**	**0**	**0**	**0**	**0**	**0**	**0**	**0**	**0**	**0**
Id	**RW**	**Field**	**Value Id**	**Value**								**Description**																							
A	RW	OVERRUN										Overrun error A start bit is received while the previous data still lies in RXD. (Previous data is lost.)																							
			NotPresent	0								Read: error not present																							
			Present	1								Read: error present																							
B	RW	PARITY										Parity error A character with bad parity is received, if HW parity check is enabled.																							
			NotPresent	0								Read: error not present																							
			Present	1								Read: error present																							
C	RW	FRAMING										Framing error occurred A valid stop bit is not detected on the serial data input after all bits in a character have been received.																							
			NotPresent	0								Read: error not present																							
			Present	1								Read: error present																							

Bit number				31	30	29	28	27	26	25	24	23	22	21	20	19	18	17	16	15	14	13	12	11	10	9	8	7	6	5	4	3	2	1	0
Id																																D	C	B	A
Reset 0x00000000				**0**	**0**	**0**	**0**	**0**	**0**	**0**	**0**	**0**	**0**	**0**	**0**	**0**	**0**	**0**	**0**	**0**	**0**	**0**	**0**	**0**	**0**	**0**	**0**	**0**	**0**	**0**	**0**	**0**	**0**	**0**	**0**
Id	**RW**	**Field**	**Value Id**	**Value**																															
D	RW	BREAK																																	
			NotPresent	0																															
			Present	1																															

Break condition

The serial data input is '0' for longer than the length of a data frame. (The data frame length is 10 bits without parity bit, and 11 bits with parity bit.).

Read: error not present

Read: error present

35.10.6 ENABLE

Address offset: 0x500

Enable UART

Bit number				31	30	29	28	27	26	25	24	23	22	21	20	19	18	17	16	15	14	13	12	11	10	9	8	7	6	5	4	3	2	1	0
Id																																A	A	A	A
Reset 0x00000000				**0**	**0**	**0**	**0**	**0**	**0**	**0**	**0**	**0**	**0**	**0**	**0**	**0**	**0**	**0**	**0**	**0**	**0**	**0**	**0**	**0**	**0**	**0**	**0**	**0**	**0**	**0**	**0**	**0**	**0**	**0**	**0**
Id	**RW**	**Field**	**Value Id**	**Value**																															
A	RW	ENABLE																																	
			Disabled	0																															
			Enabled	8																															

Enable or disable UARTE

Disable UARTE

Enable UARTE

35.10.7 PSEL.RTS

Address offset: 0x508

Pin select for RTS signal

Bit number				31	30	29	28	27	26	25	24	23	22	21	20	19	18	17	16	15	14	13	12	11	10	9	8	7	6	5	4	3	2	1	0
Id				C																											A	A	A	A	A
Reset 0xFFFFFFFF				**1**	**1**	**1**	**1**	**1**	**1**	**1**	**1**	**1**	**1**	**1**	**1**	**1**	**1**	**1**	**1**	**1**	**1**	**1**	**1**	**1**	**1**	**1**	**1**	**1**	**1**	**1**	**1**	**1**	**1**	**1**	**1**
Id	**RW**	**Field**	**Value Id**	**Value**																															
A	RW	PIN		[0..31]																															
C	RW	CONNECT																																	
			Disconnected	1																															
			Connected	0																															

Pin number

Connection

Disconnect

Connect

35.10.8 PSEL.TXD

Address offset: 0x50C

Pin select for TXD signal

Bit number				31	30	29	28	27	26	25	24	23	22	21	20	19	18	17	16	15	14	13	12	11	10	9	8	7	6	5	4	3	2	1	0
Id				C																											A	A	A	A	A
Reset 0xFFFFFFFF				**1**	**1**	**1**	**1**	**1**	**1**	**1**	**1**	**1**	**1**	**1**	**1**	**1**	**1**	**1**	**1**	**1**	**1**	**1**	**1**	**1**	**1**	**1**	**1**	**1**	**1**	**1**	**1**	**1**	**1**	**1**	**1**
Id	**RW**	**Field**	**Value Id**	**Value**																															
A	RW	PIN		[0..31]																															
C	RW	CONNECT																																	
			Disconnected	1																															
			Connected	0																															

Pin number

Connection

Disconnect

Connect

35.10.9 PSEL.CTS

Address offset: 0x510

Pin select for CTS signal

Bit number				31	30	29	28	27	26	25	24	23	22	21	20	19	18	17	16	15	14	13	12	11	10	9	8	7	6	5	4	3	2	1	0
Id				C																											A	A	A	A	A
Reset 0xFFFFFFFF				**1**	**1**	**1**	**1**	**1**	**1**	**1**	**1**	**1**	**1**	**1**	**1**	**1**	**1**	**1**	**1**	**1**	**1**	**1**	**1**	**1**	**1**	**1**	**1**	**1**	**1**	**1**	**1**	**1**	**1**	**1**	**1**
Id	**RW**	**Field**	**Value Id**	**Value**								**Description**																							
A	RW	PIN		[0..31]								Pin number																							
C	RW	CONNECT										Connection																							
			Disconnected	1								Disconnect																							
			Connected	0								Connect																							

35.10.10 PSEL.RXD

Address offset: 0x514

Pin select for RXD signal

Bit number				31	30	29	28	27	26	25	24	23	22	21	20	19	18	17	16	15	14	13	12	11	10	9	8	7	6	5	4	3	2	1	0
Id				C																											A	A	A	A	A
Reset 0xFFFFFFFF				**1**	**1**	**1**	**1**	**1**	**1**	**1**	**1**	**1**	**1**	**1**	**1**	**1**	**1**	**1**	**1**	**1**	**1**	**1**	**1**	**1**	**1**	**1**	**1**	**1**	**1**	**1**	**1**	**1**	**1**	**1**	**1**
Id	**RW**	**Field**	**Value Id**	**Value**								**Description**																							
A	RW	PIN		[0..31]								Pin number																							
C	RW	CONNECT										Connection																							
			Disconnected	1								Disconnect																							
			Connected	0								Connect																							

35.10.11 BAUDRATE

Address offset: 0x524

Baud rate

Bit number				31	30	29	28	27	26	25	24	23	22	21	20	19	18	17	16	15	14	13	12	11	10	9	8	7	6	5	4	3	2	1	0
Id				A	A	A	A	A	A	A	A	A	A	A	A	A	A	A	A	A	A	A	A	A	A	A	A	A	A	A	A	A	A	A	A
Reset 0x04000000				**0**	**0**	**0**	**0**	**0**	**1**	**0**	**0**	**0**	**0**	**0**	**0**	**0**	**0**	**0**	**0**	**0**	**0**	**0**	**0**	**0**	**0**	**0**	**0**	**0**	**0**	**0**	**0**	**0**	**0**	**0**	**0**
Id	**RW**	**Field**	**Value Id**	**Value**								**Description**																							
A	RW	BAUDRATE										Baud-rate																							
			Baud1200	0x0004F000								1200 baud (actual rate: 1205)																							
			Baud2400	0x0009D000								2400 baud (actual rate: 2396)																							
			Baud4800	0x0013B000								4800 baud (actual rate: 4808)																							
			Baud9600	0x00275000								9600 baud (actual rate: 9598)																							
			Baud14400	0x003AF000								14400 baud (actual rate: 14401)																							
			Baud19200	0x004EA000								19200 baud (actual rate: 19208)																							
			Baud28800	0x0075C000								28800 baud (actual rate: 28777)																							
			Baud38400	0x009D0000								38400 baud (actual rate: 38369)																							
			Baud57600	0x00EB0000								57600 baud (actual rate: 57554)																							
			Baud76800	0x013A9000								76800 baud (actual rate: 76923)																							
			Baud115200	0x01D60000								115200 baud (actual rate: 115108)																							
			Baud230400	0x03B00000								230400 baud (actual rate: 231884)																							
			Baud250000	0x04000000								250000 baud																							
			Baud460800	0x07400000								460800 baud (actual rate: 457143)																							
			Baud921600	0x0F000000								921600 baud (actual rate: 941176)																							
			Baud1M	0x10000000								1Mega baud																							

35.10.12 RXD.PTR

Address offset: 0x534

Data pointer

Bit number	31	30	29	28	27	26	25	24	23	22	21	20	19	18	17	16	15	14	13	12	11	10	9	8	7	6	5	4	3	2	1	0
Id	A	A	A	A	A	A	A	A	A	A	A	A	A	A	A	A	A	A	A	A	A	A	A	A	A	A	A	A	A	A	A	A
Reset 0x00000000	**0**	**0**	**0**	**0**	**0**	**0**	**0**	**0**	**0**	**0**	**0**	**0**	**0**	**0**	**0**	**0**	**0**	**0**	**0**	**0**	**0**	**0**	**0**	**0**	**0**	**0**	**0**	**0**	**0**	**0**	**0**	**0**

Id	RW	Field	Value Id	Value	Description
A	RW	PTR			Data pointer

35.10.13 RXD.MAXCNT

Address offset: 0x538

Maximum number of bytes in receive buffer

Bit number	31	30	29	28	27	26	25	24	23	22	21	20	19	18	17	16	15	14	13	12	11	10	9	8	7	6	5	4	3	2	1	0
Id																									A	A	A	A	A	A	A	A
Reset 0x00000000	**0**	**0**	**0**	**0**	**0**	**0**	**0**	**0**	**0**	**0**	**0**	**0**	**0**	**0**	**0**	**0**	**0**	**0**	**0**	**0**	**0**	**0**	**0**	**0**	**0**	**0**	**0**	**0**	**0**	**0**	**0**	**0**

Id	RW	Field	Value Id	Value	Description
A	RW	MAXCNT			Maximum number of bytes in receive buffer

35.10.14 RXD.AMOUNT

Address offset: 0x53C

Number of bytes transferred in the last transaction

Bit number	31	30	29	28	27	26	25	24	23	22	21	20	19	18	17	16	15	14	13	12	11	10	9	8	7	6	5	4	3	2	1	0
Id																									A	A	A	A	A	A	A	A
Reset 0x00000000	**0**	**0**	**0**	**0**	**0**	**0**	**0**	**0**	**0**	**0**	**0**	**0**	**0**	**0**	**0**	**0**	**0**	**0**	**0**	**0**	**0**	**0**	**0**	**0**	**0**	**0**	**0**	**0**	**0**	**0**	**0**	**0**

Id	RW	Field	Value Id	Value	Description
A	R	AMOUNT			Number of bytes transferred in the last transaction

35.10.15 TXD.PTR

Address offset: 0x544

Data pointer

Bit number	31	30	29	28	27	26	25	24	23	22	21	20	19	18	17	16	15	14	13	12	11	10	9	8	7	6	5	4	3	2	1	0
Id	A	A	A	A	A	A	A	A	A	A	A	A	A	A	A	A	A	A	A	A	A	A	A	A	A	A	A	A	A	A	A	A
Reset 0x00000000	**0**	**0**	**0**	**0**	**0**	**0**	**0**	**0**	**0**	**0**	**0**	**0**	**0**	**0**	**0**	**0**	**0**	**0**	**0**	**0**	**0**	**0**	**0**	**0**	**0**	**0**	**0**	**0**	**0**	**0**	**0**	**0**

Id	RW	Field	Value Id	Value	Description
A	RW	PTR			Data pointer

35.10.16 TXD.MAXCNT

Address offset: 0x548

Maximum number of bytes in transmit buffer

Bit number	31	30	29	28	27	26	25	24	23	22	21	20	19	18	17	16	15	14	13	12	11	10	9	8	7	6	5	4	3	2	1	0
Id																									A	A	A	A	A	A	A	A
Reset 0x00000000	**0**	**0**	**0**	**0**	**0**	**0**	**0**	**0**	**0**	**0**	**0**	**0**	**0**	**0**	**0**	**0**	**0**	**0**	**0**	**0**	**0**	**0**	**0**	**0**	**0**	**0**	**0**	**0**	**0**	**0**	**0**	**0**

Id	RW	Field	Value Id	Value	Description
A	RW	MAXCNT			Maximum number of bytes in transmit buffer

35.10.17 TXD.AMOUNT

Address offset: 0x54C

Number of bytes transferred in the last transaction

Bit number	31	30	29	28	27	26	25	24	23	22	21	20	19	18	17	16	15	14	13	12	11	10	9	8	7	6	5	4	3	2	1	0
Id																									A	A	A	A	A	A	A	A
Reset 0x00000000	**0**	**0**	**0**	**0**	**0**	**0**	**0**	**0**	**0**	**0**	**0**	**0**	**0**	**0**	**0**	**0**	**0**	**0**	**0**	**0**	**0**	**0**	**0**	**0**	**0**	**0**	**0**	**0**	**0**	**0**	**0**	**0**

Id	RW	Field	Value Id	Value	Description
A	R	AMOUNT			Number of bytes transferred in the last transaction

35.10.18 CONFIG

Address offset: 0x56C

Configuration of parity and hardware flow control

Bit number	31	30	29	28	27	26	25	24	23	22	21	20	19	18	17	16	15	14	13	12	11	10	9	8	7	6	5	4	3	2	1	0
Id																													B	B	B	A
Reset 0x00000000	**0**	**0**	**0**	**0**	**0**	**0**	**0**	**0**	**0**	**0**	**0**	**0**	**0**	**0**	**0**	**0**	**0**	**0**	**0**	**0**	**0**	**0**	**0**	**0**	**0**	**0**	**0**	**0**	**0**	**0**	**0**	**0**

Id	RW	Field	Value Id	Value	Description
A	RW	HWFC			Hardware flow control
			Disabled	0	Disabled
			Enabled	1	Enabled
B	RW	PARITY			Parity
			Excluded	0x0	Exclude parity bit
			Included	0x7	Include parity bit

35.11 Electrical Specification

35.11.1 UARTE electrical specification

Symbol	Description	Min.	Typ.	Max.	Units
f_{UARTE}	Baud rate for UARTE[31].			1000	kbps
$I_{UARTE1M}$	Run current at max baud rate.		55		µA
$I_{UARTE115k}$	Run current at 115200 bps.		55		µA
$I_{UARTE1k2}$	Run current at 1200 bps.		55		µA
$I_{UARTE,IDLE}$	Idle current for UARTE (STARTed, no XXX activity)		1		µA
$t_{UARTE,CTSH}$	CTS high time	1			µs
$t_{UARTE,START,LP}$	Time from STARTRX/STARTTX task to transmission started, low power mode		$t_{UARTE,STAR}$ + t_{START_HFIN}		µs
$t_{UARTE,START,CL}$	Time from STARTRX/STARTTX task to transmission started, constant latency mode		1		µs

[31] Higher baud rates may require GPIOs to be set as High Drive, see GPIO chapter for more details.

36 QDEC — Quadrature decoder

The Quadrature decoder (QDEC) provides buffered decoding of quadrature-encoded sensor signals. It is suitable for mechanical and optical sensors.

The sample period and accumulation are configurable to match application requirements. The QDEC provides the following:

- Decoding of digital waveform from off-chip quadrature encoder.
- Sample accumulation eliminating hard real-time requirements to be enforced on application.
- Optional input de-bounce filters.
- Optional LED output signal for optical encoders.

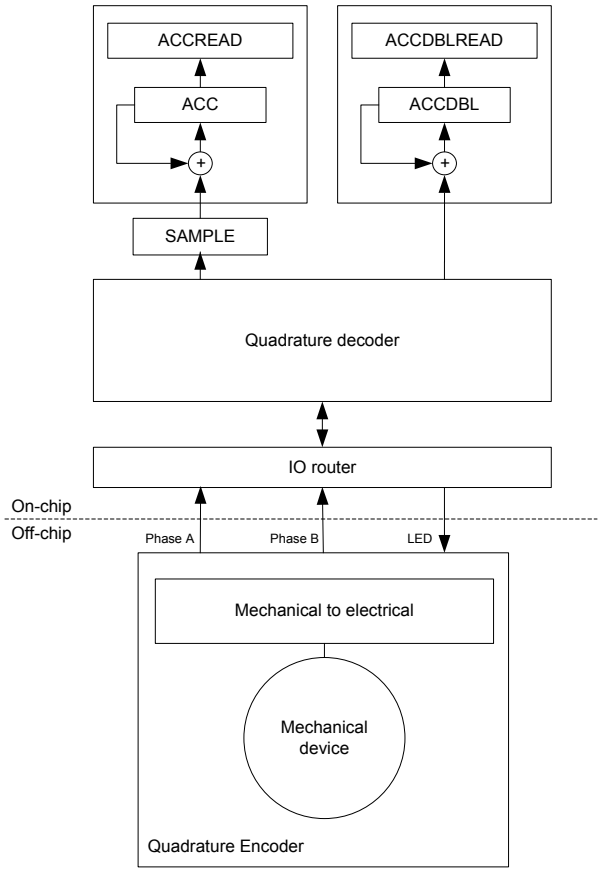

Figure 96: Quadrature decoder configuration

36.1 Sampling and decoding

The QDEC decodes the output from an incremental motion encoder by sampling the QDEC phase input pins (A and B).

The off-chip quadrature encoder is an incremental motion encoder outputting two waveforms, phase A and phase B. The two output waveforms are always 90 degrees out of phase, meaning that one always changes level before the other. The direction of movement is indicated by which of these two waveforms that changes level first. Invalid transitions may occur, that is when the two waveforms switch simultaneously. This may occur if the wheel rotates too fast relative to the sample rate set for the decoder.

The QDEC decodes the output from the off-chip encoder by sampling the QDEC phase input pins (A and B) at a fixed rate as specified in the SAMPLEPER register.

If the SAMPLEPER value needs to be changed, the QDEC shall be stopped using the STOP task. SAMPLEPER can be then changed upon receiving the STOPPED event, and QDEC can be restarted using the STOP task. Failing to do so may result in unpredictable behaviour.

It is good practice to change other registers (LEDPOL, REPORTPER, DBFEN and LEDPRE) only when the QDEC is stopped.

When started, the decoder continuously samples the two input waveforms and decodes these by comparing the current sample pair (n) with the previous sample pair (n-1).

The decoding of the sample pairs is described in the table below.

Table 79: Sampled value encoding

Previous sample pair(n - 1)		Current samples pair(n)		SAMPLE register	ACC operation	ACCDBL operation	Description
A	B	A	B				
0	0	0	0	0	No change	No change	No movement
0	0	0	1	1	Increment	No change	Movement in positive direction
0	0	1	0	-1	Decrement	No change	Movement in negative direction
0	0	1	1	2	No change	Increment	Error: Double transition
0	1	0	0	-1	Decrement	No change	Movement in negative direction
0	1	0	1	0	No change	No change	No movement
0	1	1	0	2	No change	Increment	Error: Double transition
0	1	1	1	1	Increment	No change	Movement in positive direction
1	0	0	0	1	Increment	No change	Movement in positive direction
1	0	0	1	2	No change	Increment	Error: Double transition
1	0	1	0	0	No change	No change	No movement
1	0	1	1	-1	Decrement	No change	Movement in negative direction
1	1	0	0	2	No change	Increment	Error: Double transition
1	1	0	1	-1	Decrement	No change	Movement in negative direction
1	1	1	0	1	Increment	No change	Movement in positive direction
1	1	1	1	0	No change	No change	No movement

36.2 LED output

The LED output follows the sample period, and the LED is switched on a given period before sampling and switched off immediately after the inputs are sampled. The period the LED is switched on before sampling is given in the LEDPRE register.

The LED output pin polarity is specified in the LEDPOL register.

For using off-chip mechanical encoders not requiring a LED, the LED output can be disabled by writing value 'Disconnected' to the CONNECT field of the PSEL.LED register. In this case the QDEC will not acquire access to a LED output pin and the pin can be used for other purposes by the CPU.

36.3 Debounce filters

Each of the two-phase inputs have digital debounce filters.

When enabled through the DBFEN register, the filter inputs are sampled at a fixed 1 MHz frequency during the entire sample period (which is specified in the SAMPLEPER register), and the filters require all of the samples within this sample period to equal before the input signal is accepted and transferred to the output of the filter.

As a result, only input signal with a steady state longer than twice the period specified in SAMPLEPER are guaranteed to pass through the filter, and any signal with a steady state shorter than SAMPLEPER will always be suppressed by the filter. (This is assumed that the frequency during the debounce period never exceeds 500 kHz (as required by the Nyquist theorem when using a 1 MHz sample frequency).

The LED will always be ON when the debounce filters are enabled, as the inputs in this case will be sampled continuously.

Note that when when the debounce filters are enabled, displacements reported by the QDEC peripheral are delayed by one SAMPLEPER period.

36.4 Accumulators

The quadrature decoder contains two accumulator registers, ACC and ACCDBL, that accumulate respectively valid motion sample values and the number of detected invalid samples (double transitions).

The ACC register will accumulate all valid values (1/-1) written to the SAMPLE register. This can be useful for preventing hard real-time requirements from being enforced on the application. When using the ACC register the application does not need to read every single sample from the SAMPLE register, but can instead fetch the ACC register whenever it fits the application. The ACC register will always hold the relative movement of the external mechanical device since the previous clearing of the ACC register. Sample values indicating a double transition (2) will not be accumulated in the ACC register.

An ACCOF event will be generated if the ACC receives a SAMPLE value that would cause the register to overflow or underflow. Any SAMPLE value that would cause an ACC overflow or underflow will be discarded, but any samples not causing the ACC to overflow or underflow will still be accepted.

The accumulator ACCDBL accumulates the number of detected double transitions since the previous clearing of the ACCDBL register.

The ACC and ACCDBL registers can be cleared by the READCLRACC and subsequently read using the ACCREAD and ACCDBLREAD registers.

The ACC register can be separately cleared by the RDCLRACC and subsequently read using the ACCREAD registers.

The ACCDBL register can be separately cleared by the RDCLRDBL and subsequently read using the ACCDBLREAD registers.

The REPORTPER register allows automating the capture of several samples before it can send out a REPORTRDY event in case a non-null displacement has been captured and accumulated, and a DBLRDY event in case one or more double-displacements have been captured and accumulated. The REPORTPER field in this register selects after how many samples the accumulators contents are evaluated to send (or not) REPORTRDY and DBLRDY events.

Using the RDCLRACC task (manually sent upon receiving the event, or using the DBLRDY_RDCLRACC shortcut), ACCREAD can then be read.

In case at least one double transition has been captured and accumulated, a DBLRDY event is sent. Using the RDCLRDBL task (manually sent upon receiving the event, or using the DBLRDY_RDCLRDBL shortcut), ACCDBLREAD can then be read.

36.5 Output/input pins

The QDEC uses a three-pin interface to the off-chip quadrature encoder.

These pins will be acquired when the QDEC is enabled in the ENABLE register. The pins acquired by the QDEC cannot be written by the CPU, but they can still be read by the CPU.

The pin numbers to be used for the QDEC are selected using the PSEL.n registers.

36.6 Pin configuration

The Phase A, Phase B, and LED signals are mapped to physical pins according to the configuration specified in the PSEL.A, PSEL.B, and PSEL.LED registers respectively.

If the CONNECT field value 'Disconnected' is specified in any of these registers, the associated signal will not be connected to any physical pin. The PSEL.A, PSEL.B, and PSEL.LED registers and their configurations are only used as long as the QDEC is enabled, and retained only as long as the device is in

ON mode. When the peripheral is disabled, the pins will behave as regular GPIOs, and use the configuration in their respective OUT bit field and PIN_CNF[n] register.

To secure correct behavior in the QDEC, the pins used by the QDEC must be configured in the GPIO peripheral as described in *Table 80: GPIO configuration before enabling peripheral* on page 345 before enabling the QDEC. This configuration must be retained in the GPIO for the selected IOs as long as the QDEC is enabled.

Only one peripheral can be assigned to drive a particular GPIO pin at a time. Failing to do so may result in unpredictable behavior.

Table 80: GPIO configuration before enabling peripheral

QDEC signal	QDEC pin	Direction	Output value	Comment
Phase A	As specified in PSEL.A	Input	Not applicable	
Phase B	As specified in PSEL.B	Input	Not applicable	
LED	As specified in PSEL.LED	Input	Not applicable	

36.7 Registers

Table 81: Instances

Base address	Peripheral	Instance	Description	Configuration
0x40012000	QDEC	QDEC	Quadrature decoder	

Table 82: Register Overview

Register	Offset	Description
TASKS_START	0x000	Task starting the quadrature decoder
TASKS_STOP	0x004	Task stopping the quadrature decoder
TASKS_READCLRACC	0x008	Read and clear ACC and ACCDBL
TASKS_RDCLRACC	0x00C	Read and clear ACC
TASKS_RDCLRDBL	0x010	Read and clear ACCDBL
EVENTS_SAMPLERDY	0x100	Event being generated for every new sample value written to the SAMPLE register
EVENTS_REPORTRDY	0x104	Non-null report ready
EVENTS_ACCOF	0x108	ACC or ACCDBL register overflow
EVENTS_DBLRDY	0x10C	Double displacement(s) detected
EVENTS_STOPPED	0x110	QDEC has been stopped
SHORTS	0x200	Shortcut register
INTENSET	0x304	Enable interrupt
INTENCLR	0x308	Disable interrupt
ENABLE	0x500	Enable the quadrature decoder
LEDPOL	0x504	LED output pin polarity
SAMPLEPER	0x508	Sample period
SAMPLE	0x50C	Motion sample value
REPORTPER	0x510	Number of samples to be taken before REPORTRDY and DBLRDY events can be generated
ACC	0x514	Register accumulating the valid transitions
ACCREAD	0x518	Snapshot of the ACC register, updated by the READCLRACC or RDCLRACC task
PSEL.LED	0x51C	Pin select for LED signal
PSEL.A	0x520	Pin select for A signal
PSEL.B	0x524	Pin select for B signal
DBFEN	0x528	Enable input debounce filters
LEDPRE	0x540	Time period the LED is switched ON prior to sampling
ACCDBL	0x544	Register accumulating the number of detected double transitions
ACCDBLREAD	0x548	Snapshot of the ACCDBL, updated by the READCLRACC or RDCLRDBL task

36.7.1 SHORTS

Address offset: 0x200

Shortcut register

Bit number				31	30	29	28	27	26	25	24	23	22	21	20	19	18	17	16	15	14	13	12	11	10	9	8	7	6	5	4	3	2	1	0
Id																													G	F	E	D	C	B	A
Reset 0x00000000				**0**	**0**	**0**	**0**	**0**	**0**	**0**	**0**	**0**	**0**	**0**	**0**	**0**	**0**	**0**	**0**	**0**	**0**	**0**	**0**	**0**	**0**	**0**	**0**	**0**	**0**	**0**	**0**	**0**	**0**	**0**	**0**
Id	**RW**	**Field**	**Value Id**	**Value**								**Description**																							
A	RW	REPORTRDY_READCLRACC										Shortcut between REPORTRDY event and READCLRACC task See *EVENTS_REPORTRDY* and *TASKS_READCLRACC*																							
			Disabled	0								Disable shortcut																							
			Enabled	1								Enable shortcut																							
B	RW	SAMPLERDY_STOP										Shortcut between SAMPLERDY event and STOP task See *EVENTS_SAMPLERDY* and *TASKS_STOP*																							
			Disabled	0								Disable shortcut																							
			Enabled	1								Enable shortcut																							
C	RW	REPORTRDY_RDCLRACC										Shortcut between REPORTRDY event and RDCLRACC task See *EVENTS_REPORTRDY* and *TASKS_RDCLRACC*																							
			Disabled	0								Disable shortcut																							
			Enabled	1								Enable shortcut																							
D	RW	REPORTRDY_STOP										Shortcut between REPORTRDY event and STOP task See *EVENTS_REPORTRDY* and *TASKS_STOP*																							
			Disabled	0								Disable shortcut																							
			Enabled	1								Enable shortcut																							
E	RW	DBLRDY_RDCLRDBL										Shortcut between DBLRDY event and RDCLRDBL task See *EVENTS_DBLRDY* and *TASKS_RDCLRDBL*																							
			Disabled	0								Disable shortcut																							
			Enabled	1								Enable shortcut																							
F	RW	DBLRDY_STOP										Shortcut between DBLRDY event and STOP task See *EVENTS_DBLRDY* and *TASKS_STOP*																							
			Disabled	0								Disable shortcut																							
			Enabled	1								Enable shortcut																							
G	RW	SAMPLERDY_READCLRACC										Shortcut between SAMPLERDY event and READCLRACC task See *EVENTS_SAMPLERDY* and *TASKS_READCLRACC*																							
			Disabled	0								Disable shortcut																							
			Enabled	1								Enable shortcut																							

36.7.2 INTENSET

Address offset: 0x304

Enable interrupt

Bit number				31	30	29	28	27	26	25	24	23	22	21	20	19	18	17	16	15	14	13	12	11	10	9	8	7	6	5	4	3	2	1	0
Id																															E	D	C	B	A
Reset 0x00000000				**0**	**0**	**0**	**0**	**0**	**0**	**0**	**0**	**0**	**0**	**0**	**0**	**0**	**0**	**0**	**0**	**0**	**0**	**0**	**0**	**0**	**0**	**0**	**0**	**0**	**0**	**0**	**0**	**0**	**0**	**0**	**0**
Id	**RW**	**Field**	**Value Id**	**Value**								**Description**																							
A	RW	SAMPLERDY										Write '1' to Enable interrupt for SAMPLERDY event See *EVENTS_SAMPLERDY*																							
			Set	1								Enable																							
			Disabled	0								Read: Disabled																							
			Enabled	1								Read: Enabled																							
B	RW	REPORTRDY										Write '1' to Enable interrupt for REPORTRDY event See *EVENTS_REPORTRDY*																							
			Set	1								Enable																							
			Disabled	0								Read: Disabled																							
			Enabled	1								Read: Enabled																							
C	RW	ACCOF										Write '1' to Enable interrupt for ACCOF event See *EVENTS_ACCOF*																							
			Set	1								Enable																							

Bit number				31	30	29	28	27	26	25	24	23	22	21	20	19	18	17	16	15	14	13	12	11	10	9	8	7	6	5	4	3	2	1	0
Id																															E	D	C	B	A
Reset 0x00000000				**0**	**0**	**0**	**0**	**0**	**0**	**0**	**0**	**0**	**0**	**0**	**0**	**0**	**0**	**0**	**0**	**0**	**0**	**0**	**0**	**0**	**0**	**0**	**0**	**0**	**0**	**0**	**0**	**0**	**0**	**0**	**0**
Id	**RW**	**Field**	**Value Id**	**Value**																															
			Disabled	0																															
			Enabled	1																															
D	RW	DBLRDY																																	
			Set	1																															
			Disabled	0																															
			Enabled	1																															
E	RW	STOPPED																																	
			Set	1																															
			Disabled	0																															
			Enabled	1																															

36.7.3 INTENCLR

Address offset: 0x308

Disable interrupt

Bit number				31	30	29	28	27	26	25	24	23	22	21	20	19	18	17	16	15	14	13	12	11	10	9	8	7	6	5	4	3	2	1	0
Id																															E	D	C	B	A
Reset 0x00000000				**0**	**0**	**0**	**0**	**0**	**0**	**0**	**0**	**0**	**0**	**0**	**0**	**0**	**0**	**0**	**0**	**0**	**0**	**0**	**0**	**0**	**0**	**0**	**0**	**0**	**0**	**0**	**0**	**0**	**0**	**0**	**0**
Id	**RW**	**Field**	**Value Id**	**Value**																															
A	RW	SAMPLERDY																																	
			Clear	1																															
			Disabled	0																															
			Enabled	1																															
B	RW	REPORTRDY																																	
			Clear	1																															
			Disabled	0																															
			Enabled	1																															
C	RW	ACCOF																																	
			Clear	1																															
			Disabled	0																															
			Enabled	1																															
D	RW	DBLRDY																																	
			Clear	1																															
			Disabled	0																															
			Enabled	1																															
E	RW	STOPPED																																	
			Clear	1																															
			Disabled	0																															
			Enabled	1																															

36.7.4 ENABLE

Address offset: 0x500

Enable the quadrature decoder

Bit number				31	30	29	28	27	26	25	24	23	22	21	20	19	18	17	16	15	14	13	12	11	10	9	8	7	6	5	4	3	2	1	0
Id																																			A
Reset 0x00000000				**0**	**0**	**0**	**0**	**0**	**0**	**0**	**0**	**0**	**0**	**0**	**0**	**0**	**0**	**0**	**0**	**0**	**0**	**0**	**0**	**0**	**0**	**0**	**0**	**0**	**0**	**0**	**0**	**0**	**0**	**0**	**0**
Id	**RW**	**Field**	**Value Id**	**Value**								**Description**																							
A	RW	ENABLE										Enable or disable the quadrature decoder When enabled the decoder pins will be active. When disabled the quadrature decoder pins are not active and can be used as GPIO .																							
			Disabled	0								Disable																							
			Enabled	1								Enable																							

36.7.5 LEDPOL

Address offset: 0x504

LED output pin polarity

Bit number				31	30	29	28	27	26	25	24	23	22	21	20	19	18	17	16	15	14	13	12	11	10	9	8	7	6	5	4	3	2	1	0
Id																																			A
Reset 0x00000000				**0**	**0**	**0**	**0**	**0**	**0**	**0**	**0**	**0**	**0**	**0**	**0**	**0**	**0**	**0**	**0**	**0**	**0**	**0**	**0**	**0**	**0**	**0**	**0**	**0**	**0**	**0**	**0**	**0**	**0**	**0**	**0**
Id	**RW**	**Field**	**Value Id**	**Value**								**Description**																							
A	RW	LEDPOL										LED output pin polarity																							
			ActiveLow	0								Led active on output pin low																							
			ActiveHigh	1								Led active on output pin high																							

36.7.6 SAMPLEPER

Address offset: 0x508

Sample period

Bit number				31	30	29	28	27	26	25	24	23	22	21	20	19	18	17	16	15	14	13	12	11	10	9	8	7	6	5	4	3	2	1	0
Id																																A	A	A	A
Reset 0x00000000				**0**	**0**	**0**	**0**	**0**	**0**	**0**	**0**	**0**	**0**	**0**	**0**	**0**	**0**	**0**	**0**	**0**	**0**	**0**	**0**	**0**	**0**	**0**	**0**	**0**	**0**	**0**	**0**	**0**	**0**	**0**	**0**
Id	**RW**	**Field**	**Value Id**	**Value**								**Description**																							
A	RW	SAMPLEPER										Sample period. The SAMPLE register will be updated for every new sample																							
			128us	0								128 us																							
			256us	1								256 us																							
			512us	2								512 us																							
			1024us	3								1024 us																							
			2048us	4								2048 us																							
			4096us	5								4096 us																							
			8192us	6								8192 us																							
			16384us	7								16384 us																							
			32ms	8								32768 us																							
			65ms	9								65536 us																							
			131ms	10								131072 us																							

36.7.7 SAMPLE

Address offset: 0x50C

Motion sample value

Bit number				31	30	29	28	27	26	25	24	23	22	21	20	19	18	17	16	15	14	13	12	11	10	9	8	7	6	5	4	3	2	1	0
Id				A	A	A	A	A	A	A	A	A	A	A	A	A	A	A	A	A	A	A	A	A	A	A	A	A	A	A	A	A	A	A	A
Reset 0x00000000				**0**	**0**	**0**	**0**	**0**	**0**	**0**	**0**	**0**	**0**	**0**	**0**	**0**	**0**	**0**	**0**	**0**	**0**	**0**	**0**	**0**	**0**	**0**	**0**	**0**	**0**	**0**	**0**	**0**	**0**	**0**	**0**
Id	**RW**	**Field**	**Value Id**	**Value**								**Description**																							
A	R	SAMPLE		[-1..2]								Last motion sample																							

Bit number				31	30	29	28	27	26	25	24	23	22	21	20	19	18	17	16	15	14	13	12	11	10	9	8	7	6	5	4	3	2	1	0
Id				A	A	A	A	A	A	A	A	A	A	A	A	A	A	A	A	A	A	A	A	A	A	A	A	A	A	A	A	A	A	A	A
Reset 0x00000000				**0**	**0**	**0**	**0**	**0**	**0**	**0**	**0**	**0**	**0**	**0**	**0**	**0**	**0**	**0**	**0**	**0**	**0**	**0**	**0**	**0**	**0**	**0**	**0**	**0**	**0**	**0**	**0**	**0**	**0**	**0**	**0**
Id	**RW**	**Field**	**Value Id**	**Value**																															

Id	RW	Field	Value Id	Value	Description
					The value is a 2's complement value, and the sign gives the direction of the motion. The value '2' indicates a double transition.

36.7.8 REPORTPER

Address offset: 0x510

Number of samples to be taken before REPORTRDY and DBLRDY events can be generated

Bit number				31	30	29	28	27	26	25	24	23	22	21	20	19	18	17	16	15	14	13	12	11	10	9	8	7	6	5	4	3	2	1	0
Id																																A	A	A	A
Reset 0x00000000				**0**	**0**	**0**	**0**	**0**	**0**	**0**	**0**	**0**	**0**	**0**	**0**	**0**	**0**	**0**	**0**	**0**	**0**	**0**	**0**	**0**	**0**	**0**	**0**	**0**	**0**	**0**	**0**	**0**	**0**	**0**	**0**
Id	**RW**	**Field**	**Value Id**	**Value**																															
A	RW	REPORTPER																																	

Id	RW	Field	Value Id	Value	Description
					Specifies the number of samples to be accumulated in the ACC register before the REPORTRDY and DBLRDY events can be generated The report period in [us] is given as: RPUS = SP * RP Where RPUS is the report period in [us/report], SP is the sample period in [us/sample] specified in SAMPLEPER, and RP is the report period in [samples/report] specified in REPORTPER .
			10Smpl	0	10 samples / report
			40Smpl	1	40 samples / report
			80Smpl	2	80 samples / report
			120Smpl	3	120 samples / report
			160Smpl	4	160 samples / report
			200Smpl	5	200 samples / report
			240Smpl	6	240 samples / report
			280Smpl	7	280 samples / report
			1Smpl	8	1 sample / report

36.7.9 ACC

Address offset: 0x514

Register accumulating the valid transitions

Bit number				31	30	29	28	27	26	25	24	23	22	21	20	19	18	17	16	15	14	13	12	11	10	9	8	7	6	5	4	3	2	1	0
Id				A	A	A	A	A	A	A	A	A	A	A	A	A	A	A	A	A	A	A	A	A	A	A	A	A	A	A	A	A	A	A	A
Reset 0x00000000				**0**	**0**	**0**	**0**	**0**	**0**	**0**	**0**	**0**	**0**	**0**	**0**	**0**	**0**	**0**	**0**	**0**	**0**	**0**	**0**	**0**	**0**	**0**	**0**	**0**	**0**	**0**	**0**	**0**	**0**	**0**	**0**
Id	**RW**	**Field**	**Value Id**	**Value**																															
A	R	ACC		[-1024..1023]																															

Id	RW	Field	Value Id	Value	Description
					Register accumulating all valid samples (not double transition) read from the SAMPLE register Double transitions (SAMPLE = 2) will not be accumulated in this register. The value is a 32 bit 2's complement value. If a sample that would cause this register to overflow or underflow is received, the sample will be ignored and an overflow event (ACCOF) will be generated. The ACC register is cleared by triggering the READCLRACC or the RDCLRACC task.

36.7.10 ACCREAD

Address offset: 0x518

Snapshot of the ACC register, updated by the READCLRACC or RDCLRACC task

Bit number				31	30	29	28	27	26	25	24	23	22	21	20	19	18	17	16	15	14	13	12	11	10	9	8	7	6	5	4	3	2	1	0
Id				A	A	A	A	A	A	A	A	A	A	A	A	A	A	A	A	A	A	A	A	A	A	A	A	A	A	A	A	A	A	A	A
Reset 0x00000000				**0**	**0**	**0**	**0**	**0**	**0**	**0**	**0**	**0**	**0**	**0**	**0**	**0**	**0**	**0**	**0**	**0**	**0**	**0**	**0**	**0**	**0**	**0**	**0**	**0**	**0**	**0**	**0**	**0**	**0**	**0**	**0**
Id	**RW**	**Field**	**Value Id**	**Value**								**Description**																							
A	R	ACCREAD		[-1024..1023]								Snapshot of the ACC register. The ACCREAD register is updated when the READCLRACC or RDCLRACC task is triggered																							

36.7.11 PSEL.LED

Address offset: 0x51C

Pin select for LED signal

Bit number				31	30	29	28	27	26	25	24	23	22	21	20	19	18	17	16	15	14	13	12	11	10	9	8	7	6	5	4	3	2	1	0
Id				C																											A	A	A	A	A
Reset 0xFFFFFFFF				**1**	**1**	**1**	**1**	**1**	**1**	**1**	**1**	**1**	**1**	**1**	**1**	**1**	**1**	**1**	**1**	**1**	**1**	**1**	**1**	**1**	**1**	**1**	**1**	**1**	**1**	**1**	**1**	**1**	**1**	**1**	**1**
Id	**RW**	**Field**	**Value Id**	**Value**								**Description**																							
A	RW	PIN		[0..31]								Pin number																							
C	RW	CONNECT										Connection																							
			Disconnected	1								Disconnect																							
			Connected	0								Connect																							

36.7.12 PSEL.A

Address offset: 0x520

Pin select for A signal

Bit number				31	30	29	28	27	26	25	24	23	22	21	20	19	18	17	16	15	14	13	12	11	10	9	8	7	6	5	4	3	2	1	0
Id				C																											A	A	A	A	A
Reset 0xFFFFFFFF				**1**	**1**	**1**	**1**	**1**	**1**	**1**	**1**	**1**	**1**	**1**	**1**	**1**	**1**	**1**	**1**	**1**	**1**	**1**	**1**	**1**	**1**	**1**	**1**	**1**	**1**	**1**	**1**	**1**	**1**	**1**	**1**
Id	**RW**	**Field**	**Value Id**	**Value**								**Description**																							
A	RW	PIN		[0..31]								Pin number																							
C	RW	CONNECT										Connection																							
			Disconnected	1								Disconnect																							
			Connected	0								Connect																							

36.7.13 PSEL.B

Address offset: 0x524

Pin select for B signal

Bit number				31	30	29	28	27	26	25	24	23	22	21	20	19	18	17	16	15	14	13	12	11	10	9	8	7	6	5	4	3	2	1	0
Id				C																											A	A	A	A	A
Reset 0xFFFFFFFF				**1**	**1**	**1**	**1**	**1**	**1**	**1**	**1**	**1**	**1**	**1**	**1**	**1**	**1**	**1**	**1**	**1**	**1**	**1**	**1**	**1**	**1**	**1**	**1**	**1**	**1**	**1**	**1**	**1**	**1**	**1**	**1**
Id	**RW**	**Field**	**Value Id**	**Value**								**Description**																							
A	RW	PIN		[0..31]								Pin number																							
C	RW	CONNECT										Connection																							
			Disconnected	1								Disconnect																							
			Connected	0								Connect																							

36.7.14 DBFEN

Address offset: 0x528

Enable input debounce filters

Bit number				31	30	29	28	27	26	25	24	23	22	21	20	19	18	17	16	15	14	13	12	11	10	9	8	7	6	5	4	3	2	1	0
Id																																			A
Reset 0x00000000				**0**	**0**	**0**	**0**	**0**	**0**	**0**	**0**	**0**	**0**	**0**	**0**	**0**	**0**	**0**	**0**	**0**	**0**	**0**	**0**	**0**	**0**	**0**	**0**	**0**	**0**	**0**	**0**	**0**	**0**	**0**	**0**
Id	**RW**	**Field**	**Value Id**	**Value**																															
A	RW	DBFEN																																	
			Disabled	0																															
			Enabled	1																															

36.7.15 LEDPRE

Address offset: 0x540

Time period the LED is switched ON prior to sampling

Bit number				31	30	29	28	27	26	25	24	23	22	21	20	19	18	17	16	15	14	13	12	11	10	9	8	7	6	5	4	3	2	1	0
Id																											A	A	A	A	A	A	A	A	A
Reset 0x00000010				**0**	**0**	**0**	**0**	**0**	**0**	**0**	**0**	**0**	**0**	**0**	**0**	**0**	**0**	**0**	**0**	**0**	**0**	**0**	**0**	**0**	**0**	**0**	**0**	**0**	**0**	**0**	**1**	**0**	**0**	**0**	**0**
Id	**RW**	**Field**	**Value Id**	**Value**																															
A	RW	LEDPRE		[1..511]																															

36.7.16 ACCDBL

Address offset: 0x544

Register accumulating the number of detected double transitions

Bit number				31	30	29	28	27	26	25	24	23	22	21	20	19	18	17	16	15	14	13	12	11	10	9	8	7	6	5	4	3	2	1	0
Id																																A	A	A	A
Reset 0x00000000				**0**	**0**	**0**	**0**	**0**	**0**	**0**	**0**	**0**	**0**	**0**	**0**	**0**	**0**	**0**	**0**	**0**	**0**	**0**	**0**	**0**	**0**	**0**	**0**	**0**	**0**	**0**	**0**	**0**	**0**	**0**	**0**
Id	**RW**	**Field**	**Value Id**	**Value**																															
A	R	ACCDBL		[0..15]																															

Register accumulating the number of detected double or illegal transitions. (SAMPLE = 2).

When this register has reached its maximum value the accumulation of double / illegal transitions will stop. An overflow event (ACCOF) will be generated if any double or illegal transitions are detected after the maximum value was reached. This field is cleared by triggering the READCLRACC or RDCLRDBL task.

36.7.17 ACCDBLREAD

Address offset: 0x548

Snapshot of the ACCDBL, updated by the READCLRACC or RDCLRDBL task

Bit number				31	30	29	28	27	26	25	24	23	22	21	20	19	18	17	16	15	14	13	12	11	10	9	8	7	6	5	4	3	2	1	0
Id																																A	A	A	A
Reset 0x00000000				**0**	**0**	**0**	**0**	**0**	**0**	**0**	**0**	**0**	**0**	**0**	**0**	**0**	**0**	**0**	**0**	**0**	**0**	**0**	**0**	**0**	**0**	**0**	**0**	**0**	**0**	**0**	**0**	**0**	**0**	**0**	**0**
Id	**RW**	**Field**	**Value Id**	**Value**																															
A	R	ACCDBLREAD		[0..15]																															

Snapshot of the ACCDBL register. This field is updated when the READCLRACC or RDCLRDBL task is triggered.

36.8 Electrical Specification

36.8.1 QDEC Electrical Specification

Symbol	Description	Min.	Typ.	Max.	Units
I_{QDEC}	Run current		5		µA
t_{SAMPLE}	Time between sampling signals from quadrature decoder	128		131072	µs
t_{LED}	Time from LED is turned on to signals are sampled	0		511	µs

37 SAADC — Successive approximation analog-to-digital converter

The ADC is a differential successive approximation register (SAR) analog-to-digital converter.

Listed here are the main features of SAADC:

- 8/10/12-bit resolution, 14-bit resolution with oversampling
- Up to eight input channels
  - One channel per single-ended input and two channels per differential input
  - Scan mode can be configured with both single-ended channels and differential channels.
- Full scale input range (0 to VDD)
- Sampling triggered via a task from software or a PPI channel for full flexibility on sample frequency source from low power 32.768kHz RTC or more accurate 1/16MHz Timers
- One-shot conversion mode to sample a single channel
- Scan mode to sample a series of channels in sequence. Sample delay between channels is $t_{ack} + t_{conv}$ which may vary between channels according to user configuration of t_{ack}.
- Support for direct sample transfer to RAM using EasyDMA
- Interrupts on single sample and full buffer events
- Samples stored as 16-bit 2's complement values for differential and single-ended sampling
- Continuous sampling without the need of an external timer
- Internal resistor string
- Limit checking on the fly

37.1 Shared resources

The ADC can coexist with COMP, LPCOMP and other peripherals using one of `AIN0-AIN7`, provided these are assigned to different pins.

It is not recommended to select the same analog input pin for both modules.

37.2 Overview

The ADC supports up to eight external analog input channels, depending on package variant. It can be operated in a one-shot mode with sampling under software control, or a continuous conversion mode with a programmable sampling rate.

The analog inputs can be configured as eight single-ended inputs, four differential inputs or a combination of these. Each channel can be configured to select `AIN0` to `AIN7` pins, or the `VDD` pin. Channels can be sampled individually in one-shot or continuous sampling modes, or, using scan mode, multiple channels can be sampled in sequence. Channels can also be oversampled to improve noise performance.

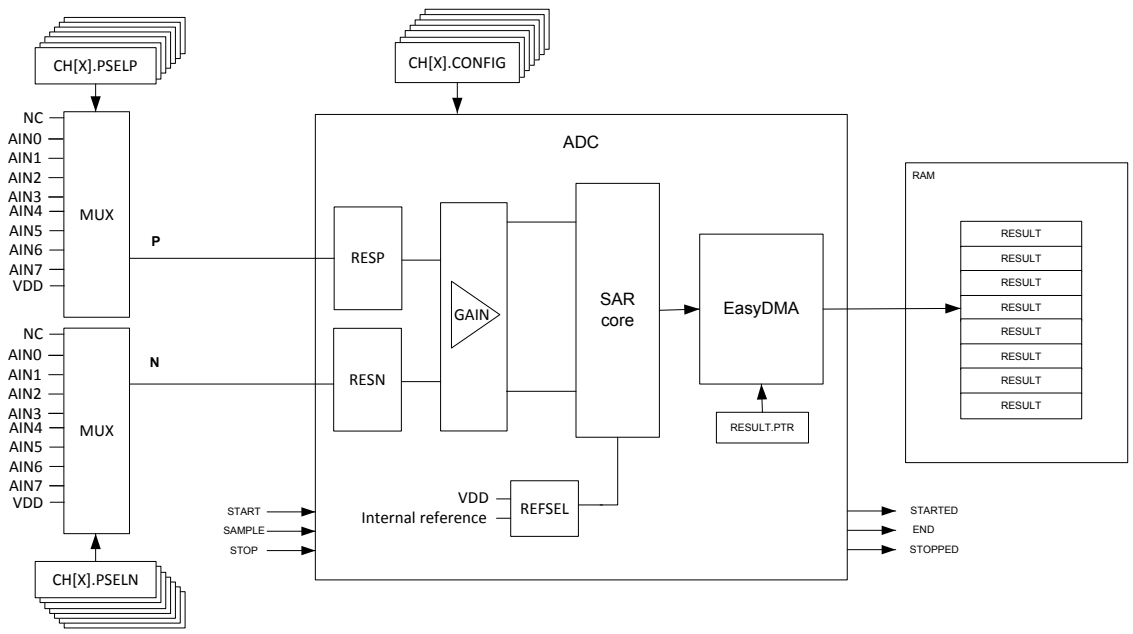

Figure 97: Simplified ADC block diagram

Internally, the ADC is always a differential analog-to-digital converter, but by default it is configured with single-ended input in the MODE field of the CH[n].CONFIG register. In single-ended mode, the negative input will be shorted to ground internally.

The assumption in single-ended mode is that the internal ground of the ADC is the same as the external ground that the measured voltage is referred to. The ADC is thus sensitive to ground bounce on the PCB in single-ended mode. If this is a concern we recommend using differential measurement.

37.3 Digital output

The output result of the ADC depends on the settings in the CH[n].CONFIG and RESOLUTION registers as follows:

```
RESULT = [V(P) - V(N) ] * GAIN/REFERENCE * 2^(RESOLUTION - m)
```

where

V(P)
: is the voltage at input P

V(N)
: is the voltage at input N

GAIN
: is the selected gain setting

REFERENCE
: is the selected reference voltage

and m=0 if CONFIG.MODE=SE, or m=1 if CONFIG.MODE=Diff.

The result generated by the ADC will deviate from the expected due DC errors like offset, gain, differential non-linearity (DNL), and integral non-linearity (INL). See *Electrical specification* for details on these parameters. The result can also vary due to AC errors like non-linearities in the GAIN block, settling errors due to high source impedance and sampling jitter. For battery measurement the DC errors are most noticeable.

The ADC has a wide selection of gains controlled in the GAIN field of the CH[n].CONFIG register. If CH[n].CONFIG.REFSEL=0, the input range of the ADC core is nominally ±0.6 V differential and the input must be scaled accordingly.

The ADC has a temperature dependent offset. If the ADC is to operate over a large temperature range, we recommend running CALIBRATEOFFSET at regular intervals, a CALIBRATEDONE event will be fired when the calibration is complete

37.4 Analog inputs and channels

Up to eight analog input channels, CH[n](n=0..7), can be configured.

See *Shared resources* on page 352 for shared input with comparators.

Any one of the available channels can be enabled for the ADC to operate in one-shot mode. If more than one CH[n] is configured, the ADC enters scan mode.

An analog input is selected as a positive converter input if CH[n].PSELP is set, setting CH[n].PSELP also enables the particular channel.

An analog input is selected as a negative converter input if CH[n].PSELN is set. The CH[n].PSELN register will have no effect unless differential mode is enabled, see MODE field in CH[n].CONFIG register.

If more than one of the CH[n].PSELP registers is set, the device enters scan mode. Input selections in scan mode are controlled by the CH[n].PSELP and CH[n].PSELN registers, where CH[n].PSELN is only used if the particular scan channel is specified as differential, see MODE field in CH[n].CONFIG register.

> **Important:** Channels selected for either COMP or LPCOMP cannot be used at the same time for ADC sampling, though channels not selected for use by these blocks can be used by the ADC.

Table 83: Legal connectivity CH[n] vs. analog input

Channel input	Source	Connectivity
CH[n].PSELP	AIN0...AIN7	Yes(any)
CH[n].PSELP	VDD	Yes
CH[n].PSELN	AIN0...AIN7	Yes(any)
CH[n].PSELN	VDD	Yes

37.5 Operation modes

The ADC input configuration supports one-shot mode, continuous mode and scan mode.

Scan mode and oversampling cannot be combined.

37.5.1 One-shot mode

One-shot operation is configured by enabling only one of the available channels defined by CH[n].PSELP, CH[n].PSELN, and CH[n].CONFIG registers.

Upon a SAMPLE task, the ADC starts to sample the input voltage. The CH[n].CONFIG.TACQ controls the acquisition time.

A DONE event signals that one sample has been taken.

In this mode, the RESULTDONE event has the same meaning as DONE when no oversampling takes place. Note that both events may occur before the actual value has been transferred into RAM by EasyDMA. For more information, see *EasyDMA* on page 356.

37.5.2 Continuous mode

Continuous sampling can be achieved by using the internal timer in the ADC, or triggering the SAMPLE task from one of the general purpose timers through the PPI.

Care shall be taken to ensure that the sample rate fulfils the following criteria, depending on how many channels are active:

$f_{SAMPLE} < 1/[t_{ACQ} + t_{conv}]$

The SAMPLERATE register can be used as a local timer instead of triggering individual SAMPLE tasks. When SAMPLERATE.MODE is set to Timers, it is sufficient to trigger SAMPLE task only once in order to start the SAADC and triggering the STOP task will stop sampling. The SAMPLERATE.CC field controls the sample rate.

The SAMPLERATE timer mode cannot be combined with SCAN mode, and only one channel can be enabled in this mode.

A DONE event signals that one sample has been taken.

In this mode, the RESULTDONE event has the same meaning as DONE when no oversampling takes place. Note that both events may occur before the actual value has been transferred into RAM by EasyDMA.

37.5.3 Oversampling

An accumulator in the ADC can be used to average noise on the analog input. In general, oversampling improves the signal-to-noise ratio (SNR). Oversampling, however, does not improve the integral non-linearity (INL), or differential non-linearity (DNL).

Oversampling and scan should not be combined, since oversampling and scan will average over input channels.

The accumulator is controlled in the OVERSAMPLE register. The SAMPLE task must be set $2^{OVERSAMPLE}$ number of times before the result is written to RAM. This can be achieved by:

- Configuring a fixed sampling rate using the local timer or a general purpose timer and PPI to trigger a SAMPLE task
- Triggering SAMPLE $2^{OVERSAMPLE}$ times from software
- Enabling BURST mode

CH[n].CONFIG.BURST can be enabled to avoid setting SAMPLE task $2^{OVERSAMPLE}$ times. With BURST = 1 the ADC will sample the input $2^{OVERSAMPLE}$ times as fast as it can (actual timing: $<(t_{ACQ}+t_{CONV})\times 2^{OVERSAMPLE}$). Thus, for the user it will just appear like the conversion took a bit longer time, but other than that, it is similar to one-shot mode. Scan mode can be combined with BURST=1, if burst is enabled on all channels.

A DONE event signals that one sample has been taken.

In this mode, the RESULTDONE event signals that enough conversions have taken place for an oversampled result to get transferred into RAM. Note that both events may occur before the actual value has been transferred into RAM by EasyDMA.

37.5.4 Scan mode

A channel is considered enabled if CH[n].PSELP is set. If more than one channel, CH[n], is enabled, the ADC enters scan mode.

In scan mode, one SAMPLE task will trigger one conversion per enabled channel. The time it takes to sample all channels is:

```
Total time < Sum(CH[x].tACQ+tCONV), x=0..enabled channels
```

A DONE event signals that one sample has been taken.

In this mode, the RESULTDONE event signals has the same meaning as DONE when no oversampling takes place. Note that both events may occur before the actual values have been transferred into RAM by EasyDMA.

Figure 98: Example of RAM placement (even RESULT.MAXCNT), channels 1, 2 and 5 enabled on page 356 provides an example of results placement in Data RAM, with an even RESULT.MAXCNT. In this example, channels 1, 2 and 5 are enabled, all others are disabled.

	31 … 16	15 … 0
RESULT.PTR	CH[2] 1st result	CH[1] 1st result
RESULT.PTR + 4	CH[1] 2nd result	CH[5] 1st result
RESULT.PTR + 8	CH[5] 2nd result	CH[2] 2nd result
	(...)	
RESULT.PTR + 2*(RESULT.MAXCNT – 2)	CH[5] last result	CH[2] last result

Figure 98: Example of RAM placement (even RESULT.MAXCNT), channels 1, 2 and 5 enabled

Figure 99: Example of RAM placement (odd RESULT.MAXCNT), channels 1, 2 and 5 enabled on page 356 provides an example of results placement in Data RAM, with an odd RESULT.MAXCNT. In this example, channels 1, 2 and 5 are enabled, all others are disabled. The last 32-bit word is populated only with one 16-bit result.

	31 … 16	15 … 0
RESULT.PTR	CH[2] 1st result	CH[1] 1st result
RESULT.PTR + 4	CH[1] 2nd result	CH[5] 1st result
RESULT.PTR + 8	CH[5] 2nd result	CH[2] 2nd result
	(...)	
RESULT.PTR + 2*(RESULT.MAXCNT – 1)		CH[5] last result

Figure 99: Example of RAM placement (odd RESULT.MAXCNT), channels 1, 2 and 5 enabled

37.6 EasyDMA

After configuring RESULT.PTR and RESULT.MAXCNT, the ADC resources are started by triggering the START task. The ADC is using EasyDMA to store results in a Result buffer in RAM.

The Result buffer is located at the address specified in the RESULT.PTR register. The RESULT.PTR register is double-buffered and it can be updated and prepared for the next START task immediately after the STARTED event is generated. The size of the Result buffer is specified in the RESULT.MAXCNT register and the ADC will generate an END event when it has filled up the Result buffer, see *Figure 100: ADC* on page 357. Results are stored in little-endian byte order in Data RAM. Every sample will be sign extended to 16 bit before stored in the Result buffer.

The ADC is stopped by triggering the STOP task. The STOP task will terminate an ongoing sampling. The ADC will generate a STOPPED event when it has stopped. If the ADC is already stopped when the STOP task is triggered, the STOPPED event will still be generated.

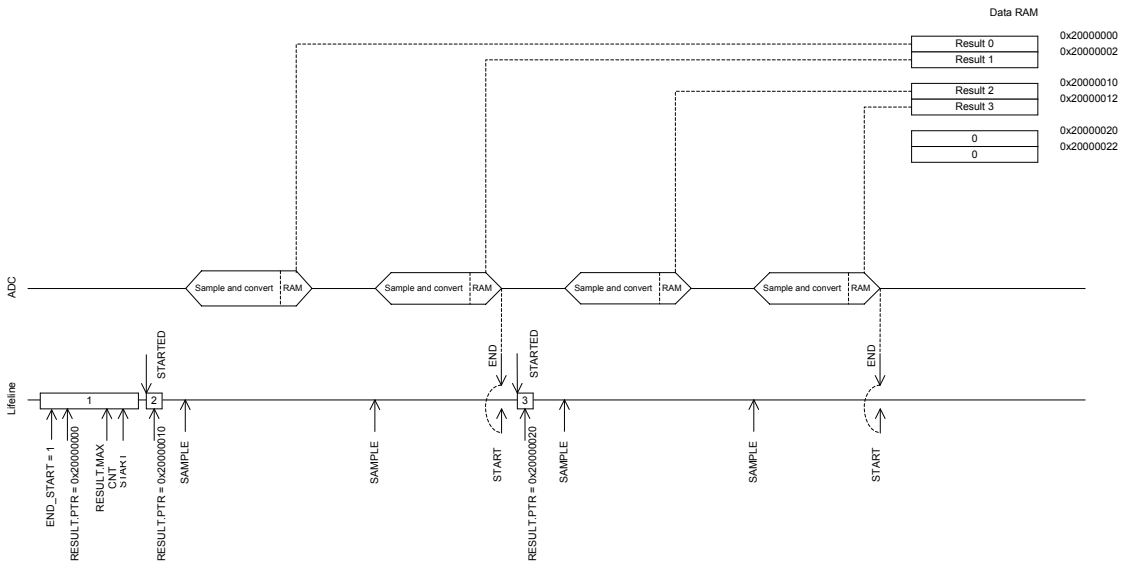

Figure 100: ADC

If the RESULT.PTR is not pointing to the Data RAM region, an EasyDMA transfer may result in a HardFault or RAM corruption. See *Memory* on page 20 for more information about the different memory regions.

The EasyDMA will have finished accessing the RAM when the END or STOPPED event has been generated.

The RESULT.AMOUNT register can be read following an END event or a STOPPED event to see how many results have been transferred to the Result buffer in RAM since the START task was triggered.

In Scan mode, the size of the Result buffer must be large enough to have room for a minimum one result from each of the enabled channels. To secure this, RESULT.MAXCNT must be specified to RESULT.MAXCNT >= "number of channels enabled". See *Scan mode* on page 355 for more information about Scan mode.

37.7 Resistor ladder

The ADC has an internal resistor string for positive and negative input.

See *Figure 101: Resistor ladder for positive input (negative input is equivalent, using RESN instead of RESP)* on page 358. The resistors are controlled in the CH[n].CONFIG.RESP and CH[n].CONFIG.RESN registers.

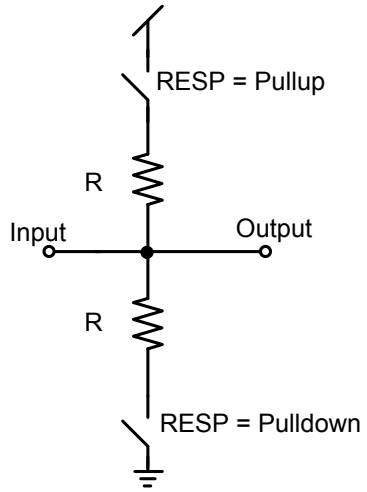

Figure 101: Resistor ladder for positive input (negative input is equivalent, using RESN instead of RESP)

37.8 Reference

The ADC can use two different references, controlled in the REFSEL field of the CH[n].CONFIG register.

These are:

- Internal reference
- VDD as reference

The internal reference results in an input range of ±0.6 V on the ADC core. VDD as reference results in an input range of ±VDD/4 on the ADC core. The gain block can be used to change the effective input range of the ADC.

```
Input range = (+- 0.6 V or +-VDD/4)/Gain
```

For example, choosing VDD as reference, single ended input (grounded negative input), and a gain of 1/4 the input range will be:

```
Input range = (VDD/4)/(1/4) = VDD
```

With internal reference, single ended input (grounded negative input), and a gain of 1/6 the input range will be:

```
Input range = (0.6 V)/(1/6) = 3.6 V
```

The AIN0-AIN7 inputs cannot exceed VDD, or be lower than VSS.

37.9 Acquisition time

To sample the input voltage, the ADC connects a capacitor to the input.

For illustration, see *Figure 102: Simplified ADC sample network* on page 359. The acquisition time indicates how long the capacitor is connected, see TACQ field in CH[n].CONFIG register. The required acquisition time depends on the source (R_{source}) resistance. For high source resistance the acquisition time should be increased, see *Table 84: Acquisition time* on page 359.

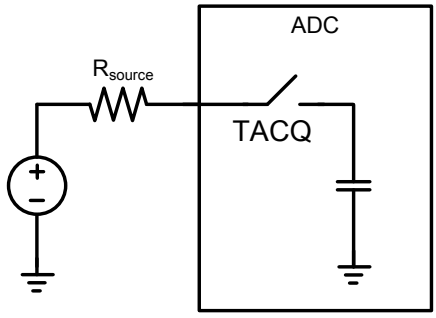

Figure 102: Simplified ADC sample network

Table 84: Acquisition time

TACQ [µs]	Maximum source resistance [kOhm]
3	10
5	40
10	100
15	200
20	400
40	800

37.10 Limits event monitoring

A channel can be event monitored by configuring limit register CH[n].LIMIT.

If the conversion result is higher than the defined high limit, or lower than the defined low limit, the appropriate event will get fired.

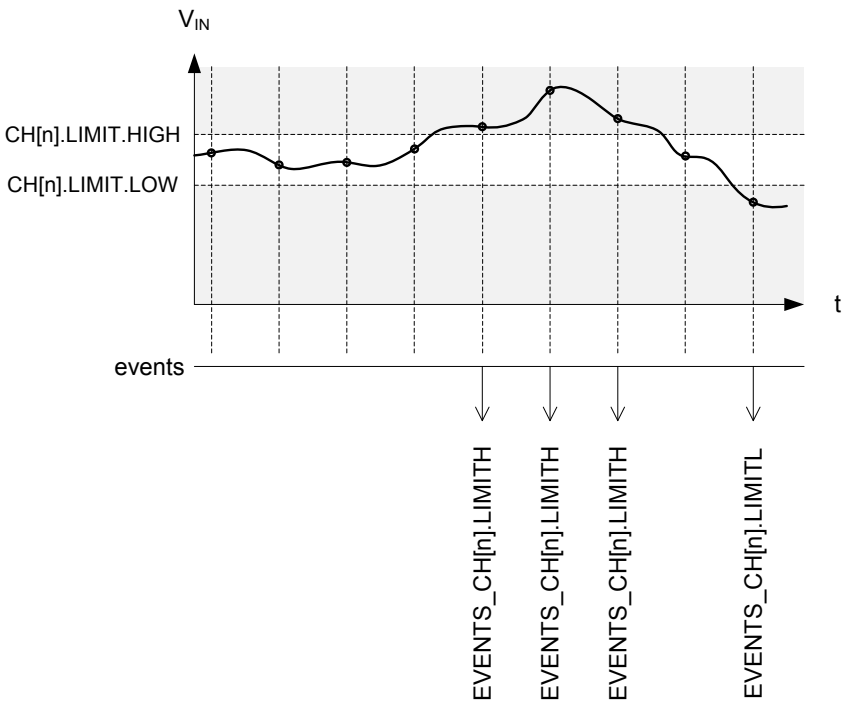

Figure 103: Example of limits monitoring on channel 'n'

Note that when setting the limits, CH[n].LIMIT.HIGH shall always be higher than or equal to CH[n].LIMIT.LOW . In other words, an event can be fired only when the input signal has been sampled

outside of the defined limits. It is not possible to fire an event when the input signal is inside a defined range by swapping high and low limits.

The comparison to limits always takes place, there is no need to enable it. If comparison is not required on a channel, the software shall simply ignore the related events. In that situation, the value of the limits registers is irrelevant, so it does not matter if CH[n].LIMIT.LOW is lower than CH[n].LIMIT.HIGH or not.

37.11 Registers

Table 85: Instances

Base address	Peripheral	Instance	Description	Configuration
0x40007000	SAADC	SAADC	Analog to digital converter	

Table 86: Register Overview

Register	Offset	Description
TASKS_START	0x000	Start the ADC and prepare the result buffer in RAM
TASKS_SAMPLE	0x004	Take one ADC sample, if scan is enabled all channels are sampled
TASKS_STOP	0x008	Stop the ADC and terminate any on-going conversion
TASKS_CALIBRATEOFFSE	0x00C	Starts offset auto-calibration
EVENTS_STARTED	0x100	The ADC has started
EVENTS_END	0x104	The ADC has filled up the Result buffer
EVENTS_DONE	0x108	A conversion task has been completed. Depending on the mode, multiple conversions might be needed for a result to be transferred to RAM.
EVENTS_RESULTDONE	0x10C	A result is ready to get transferred to RAM.
EVENTS_CALIBRATEDON	0x110	Calibration is complete
EVENTS_STOPPED	0x114	The ADC has stopped
EVENTS_CH[0].LIMITH	0x118	Last results is equal or above CH[0].LIMIT.HIGH
EVENTS_CH[0].LIMITL	0x11C	Last results is equal or below CH[0].LIMIT.LOW
EVENTS_CH[1].LIMITH	0x120	Last results is equal or above CH[1].LIMIT.HIGH
EVENTS_CH[1].LIMITL	0x124	Last results is equal or below CH[1].LIMIT.LOW
EVENTS_CH[2].LIMITH	0x128	Last results is equal or above CH[2].LIMIT.HIGH
EVENTS_CH[2].LIMITL	0x12C	Last results is equal or below CH[2].LIMIT.LOW
EVENTS_CH[3].LIMITH	0x130	Last results is equal or above CH[3].LIMIT.HIGH
EVENTS_CH[3].LIMITL	0x134	Last results is equal or below CH[3].LIMIT.LOW
EVENTS_CH[4].LIMITH	0x138	Last results is equal or above CH[4].LIMIT.HIGH
EVENTS_CH[4].LIMITL	0x13C	Last results is equal or below CH[4].LIMIT.LOW
EVENTS_CH[5].LIMITH	0x140	Last results is equal or above CH[5].LIMIT.HIGH
EVENTS_CH[5].LIMITL	0x144	Last results is equal or below CH[5].LIMIT.LOW
EVENTS_CH[6].LIMITH	0x148	Last results is equal or above CH[6].LIMIT.HIGH
EVENTS_CH[6].LIMITL	0x14C	Last results is equal or below CH[6].LIMIT.LOW
EVENTS_CH[7].LIMITH	0x150	Last results is equal or above CH[7].LIMIT.HIGH
EVENTS_CH[7].LIMITL	0x154	Last results is equal or below CH[7].LIMIT.LOW
INTEN	0x300	Enable or disable interrupt
INTENSET	0x304	Enable interrupt
INTENCLR	0x308	Disable interrupt
STATUS	0x400	Status
ENABLE	0x500	Enable or disable ADC
CH[0].PSELP	0x510	Input positive pin selection for CH[0]
CH[0].PSELN	0x514	Input negative pin selection for CH[0]
CH[0].CONFIG	0x518	Input configuration for CH[0]
CH[0].LIMIT	0x51C	High/low limits for event monitoring a channel
CH[1].PSELP	0x520	Input positive pin selection for CH[1]
CH[1].PSELN	0x524	Input negative pin selection for CH[1]
CH[1].CONFIG	0x528	Input configuration for CH[1]
CH[1].LIMIT	0x52C	High/low limits for event monitoring a channel
CH[2].PSELP	0x530	Input positive pin selection for CH[2]

Register	Offset	Description
CH[2].PSELN	0x534	Input negative pin selection for CH[2]
CH[2].CONFIG	0x538	Input configuration for CH[2]
CH[2].LIMIT	0x53C	High/low limits for event monitoring a channel
CH[3].PSELP	0x540	Input positive pin selection for CH[3]
CH[3].PSELN	0x544	Input negative pin selection for CH[3]
CH[3].CONFIG	0x548	Input configuration for CH[3]
CH[3].LIMIT	0x54C	High/low limits for event monitoring a channel
CH[4].PSELP	0x550	Input positive pin selection for CH[4]
CH[4].PSELN	0x554	Input negative pin selection for CH[4]
CH[4].CONFIG	0x558	Input configuration for CH[4]
CH[4].LIMIT	0x55C	High/low limits for event monitoring a channel
CH[5].PSELP	0x560	Input positive pin selection for CH[5]
CH[5].PSELN	0x564	Input negative pin selection for CH[5]
CH[5].CONFIG	0x568	Input configuration for CH[5]
CH[5].LIMIT	0x56C	High/low limits for event monitoring a channel
CH[6].PSELP	0x570	Input positive pin selection for CH[6]
CH[6].PSELN	0x574	Input negative pin selection for CH[6]
CH[6].CONFIG	0x578	Input configuration for CH[6]
CH[6].LIMIT	0x57C	High/low limits for event monitoring a channel
CH[7].PSELP	0x580	Input positive pin selection for CH[7]
CH[7].PSELN	0x584	Input negative pin selection for CH[7]
CH[7].CONFIG	0x588	Input configuration for CH[7]
CH[7].LIMIT	0x58C	High/low limits for event monitoring a channel
RESOLUTION	0x5F0	Resolution configuration
OVERSAMPLE	0x5F4	Oversampling configuration. OVERSAMPLE should not be combined with SCAN. The RESOLUTION is applied before averaging, thus for high OVERSAMPLE a higher RESOLUTION should be used.
SAMPLERATE	0x5F8	Controls normal or continuous sample rate
RESULT.PTR	0x62C	Data pointer
RESULT.MAXCNT	0x630	Maximum number of buffer words to transfer
RESULT.AMOUNT	0x634	Number of buffer words transferred since last START

37.11.1 INTEN

Address offset: 0x300

Enable or disable interrupt

Bit number				31	30	29	28	27	26	25	24	23	22	21	20	19	18	17	16	15	14	13	12	11	10	9	8	7	6	5	4	3	2	1	0
Id														V	U	T	S	R	Q	P	O	N	M	L	K	J	I	H	G	F	E	D	C	B	A
Reset 0x00000000				**0**	**0**	**0**	**0**	**0**	**0**	**0**	**0**	**0**	**0**	**0**	**0**	**0**	**0**	**0**	**0**	**0**	**0**	**0**	**0**	**0**	**0**	**0**	**0**	**0**	**0**	**0**	**0**	**0**	**0**	**0**	**0**
Id	**RW**	**Field**	**Value Id**	**Value**																															
A	RW	STARTED																																	
			Disabled	0																															
			Enabled	1																															
B	RW	END																																	
			Disabled	0																															
			Enabled	1																															
C	RW	DONE																																	
			Disabled	0																															
			Enabled	1																															
D	RW	RESULTDONE																																	
			Disabled	0																															
			Enabled	1																															

Bit number				31	30	29	28	27	26	25	24	23	22	21	20	19	18	17	16	15	14	13	12	11	10	9	8	7	6	5	4	3	2	1	0
Id														V	U	T	S	R	Q	P	O	N	M	L	K	J	I	H	G	F	E	D	C	B	A
Reset 0x00000000				**0**	**0**	**0**	**0**	**0**	**0**	**0**	**0**	**0**	**0**	**0**	**0**	**0**	**0**	**0**	**0**	**0**	**0**	**0**	**0**	**0**	**0**	**0**	**0**	**0**	**0**	**0**	**0**	**0**	**0**	**0**	**0**
Id	**RW**	**Field**	**Value Id**	**Value**										**Description**																					
E	RW	CALIBRATEDONE												Enable or disable interrupt for CALIBRATEDONE event See *EVENTS_CALIBRATEDONE*																					
			Disabled	0										Disable																					
			Enabled	1										Enable																					
F	RW	STOPPED												Enable or disable interrupt for STOPPED event See *EVENTS_STOPPED*																					
			Disabled	0										Disable																					
			Enabled	1										Enable																					
G	RW	CH0LIMITH												Enable or disable interrupt for CH[0].LIMITH event See *EVENTS_CH[0].LIMITH*																					
			Disabled	0										Disable																					
			Enabled	1										Enable																					
H	RW	CH0LIMITL												Enable or disable interrupt for CH[0].LIMITL event See *EVENTS_CH[0].LIMITL*																					
			Disabled	0										Disable																					
			Enabled	1										Enable																					
I	RW	CH1LIMITH												Enable or disable interrupt for CH[1].LIMITH event See *EVENTS_CH[1].LIMITH*																					
			Disabled	0										Disable																					
			Enabled	1										Enable																					
J	RW	CH1LIMITL												Enable or disable interrupt for CH[1].LIMITL event See *EVENTS_CH[1].LIMITL*																					
			Disabled	0										Disable																					
			Enabled	1										Enable																					
K	RW	CH2LIMITH												Enable or disable interrupt for CH[2].LIMITH event See *EVENTS_CH[2].LIMITH*																					
			Disabled	0										Disable																					
			Enabled	1										Enable																					
L	RW	CH2LIMITL												Enable or disable interrupt for CH[2].LIMITL event See *EVENTS_CH[2].LIMITL*																					
			Disabled	0										Disable																					
			Enabled	1										Enable																					
M	RW	CH3LIMITH												Enable or disable interrupt for CH[3].LIMITH event See *EVENTS_CH[3].LIMITH*																					
			Disabled	0										Disable																					
			Enabled	1										Enable																					
N	RW	CH3LIMITL												Enable or disable interrupt for CH[3].LIMITL event See *EVENTS_CH[3].LIMITL*																					
			Disabled	0										Disable																					
			Enabled	1										Enable																					
O	RW	CH4LIMITH												Enable or disable interrupt for CH[4].LIMITH event See *EVENTS_CH[4].LIMITH*																					
			Disabled	0										Disable																					
			Enabled	1										Enable																					
P	RW	CH4LIMITL												Enable or disable interrupt for CH[4].LIMITL event See *EVENTS_CH[4].LIMITL*																					
			Disabled	0										Disable																					
			Enabled	1										Enable																					
Q	RW	CH5LIMITH												Enable or disable interrupt for CH[5].LIMITH event See *EVENTS_CH[5].LIMITH*																					

Bit number				31	30	29	28	27	26	25	24	23	22	21	20	19	18	17	16	15	14	13	12	11	10	9	8	7	6	5	4	3	2	1	0
Id														V	U	T	S	R	Q	P	O	N	M	L	K	J	I	H	G	F	E	D	C	B	A
Reset 0x00000000				**0**	**0**	**0**	**0**	**0**	**0**	**0**	**0**	**0**	**0**	**0**	**0**	**0**	**0**	**0**	**0**	**0**	**0**	**0**	**0**	**0**	**0**	**0**	**0**	**0**	**0**	**0**	**0**	**0**	**0**	**0**	**0**
Id	**RW**	**Field**	**Value Id**	**Value**										**Description**																					
			Disabled	0										Disable																					
			Enabled	1										Enable																					
R	RW	CH5LIMITL												Enable or disable interrupt for CH[5].LIMITL event See *EVENTS_CH[5].LIMITL*																					
			Disabled	0										Disable																					
			Enabled	1										Enable																					
S	RW	CH6LIMITH												Enable or disable interrupt for CH[6].LIMITH event See *EVENTS_CH[6].LIMITH*																					
			Disabled	0										Disable																					
			Enabled	1										Enable																					
T	RW	CH6LIMITL												Enable or disable interrupt for CH[6].LIMITL event See *EVENTS_CH[6].LIMITL*																					
			Disabled	0										Disable																					
			Enabled	1										Enable																					
U	RW	CH7LIMITH												Enable or disable interrupt for CH[7].LIMITH event See *EVENTS_CH[7].LIMITH*																					
			Disabled	0										Disable																					
			Enabled	1										Enable																					
V	RW	CH7LIMITL												Enable or disable interrupt for CH[7].LIMITL event See *EVENTS_CH[7].LIMITL*																					
			Disabled	0										Disable																					
			Enabled	1										Enable																					

37.11.2 INTENSET

Address offset: 0x304

Enable interrupt

Bit number				31	30	29	28	27	26	25	24	23	22	21	20	19	18	17	16	15	14	13	12	11	10	9	8	7	6	5	4	3	2	1	0
Id														V	U	T	S	R	Q	P	O	N	M	L	K	J	I	H	G	F	E	D	C	B	A
Reset 0x00000000				**0**	**0**	**0**	**0**	**0**	**0**	**0**	**0**	**0**	**0**	**0**	**0**	**0**	**0**	**0**	**0**	**0**	**0**	**0**	**0**	**0**	**0**	**0**	**0**	**0**	**0**	**0**	**0**	**0**	**0**	**0**	**0**
Id	**RW**	**Field**	**Value Id**	**Value**										**Description**																					
A	RW	STARTED												Write '1' to Enable interrupt for STARTED event See *EVENTS_STARTED*																					
			Set	1										Enable																					
			Disabled	0										Read: Disabled																					
			Enabled	1										Read: Enabled																					
B	RW	END												Write '1' to Enable interrupt for END event See *EVENTS_END*																					
			Set	1										Enable																					
			Disabled	0										Read: Disabled																					
			Enabled	1										Read: Enabled																					
C	RW	DONE												Write '1' to Enable interrupt for DONE event See *EVENTS_DONE*																					
			Set	1										Enable																					
			Disabled	0										Read: Disabled																					
			Enabled	1										Read: Enabled																					
D	RW	RESULTDONE												Write '1' to Enable interrupt for RESULTDONE event See *EVENTS_RESULTDONE*																					
			Set	1										Enable																					
			Disabled	0										Read: Disabled																					
			Enabled	1										Read: Enabled																					

Bit number				31	30	29	28	27	26	25	24	23	22	21	20	19	18	17	16	15	14	13	12	11	10	9	8	7	6	5	4	3	2	1	0
Id														V	U	T	S	R	Q	P	O	N	M	L	K	J	I	H	G	F	E	D	C	B	A
Reset 0x00000000				**0**	**0**	**0**	**0**	**0**	**0**	**0**	**0**	**0**	**0**	**0**	**0**	**0**	**0**	**0**	**0**	**0**	**0**	**0**	**0**	**0**	**0**	**0**	**0**	**0**	**0**	**0**	**0**	**0**	**0**	**0**	**0**
Id	**RW**	**Field**	**Value Id**	**Value**										**Description**																					
E	RW	CALIBRATEDONE												Write '1' to Enable interrupt for CALIBRATEDONE event See *EVENTS_CALIBRATEDONE*																					
			Set	1										Enable																					
			Disabled	0										Read: Disabled																					
			Enabled	1										Read: Enabled																					
F	RW	STOPPED												Write '1' to Enable interrupt for STOPPED event See *EVENTS_STOPPED*																					
			Set	1										Enable																					
			Disabled	0										Read: Disabled																					
			Enabled	1										Read: Enabled																					
G	RW	CH0LIMITH												Write '1' to Enable interrupt for CH[0].LIMITH event See *EVENTS_CH[0].LIMITH*																					
			Set	1										Enable																					
			Disabled	0										Read: Disabled																					
			Enabled	1										Read: Enabled																					
H	RW	CH0LIMITL												Write '1' to Enable interrupt for CH[0].LIMITL event See *EVENTS_CH[0].LIMITL*																					
			Set	1										Enable																					
			Disabled	0										Read: Disabled																					
			Enabled	1										Read: Enabled																					
I	RW	CH1LIMITH												Write '1' to Enable interrupt for CH[1].LIMITH event See *EVENTS_CH[1].LIMITH*																					
			Set	1										Enable																					
			Disabled	0										Read: Disabled																					
			Enabled	1										Read: Enabled																					
J	RW	CH1LIMITL												Write '1' to Enable interrupt for CH[1].LIMITL event See *EVENTS_CH[1].LIMITL*																					
			Set	1										Enable																					
			Disabled	0										Read: Disabled																					
			Enabled	1										Read: Enabled																					
K	RW	CH2LIMITH												Write '1' to Enable interrupt for CH[2].LIMITH event See *EVENTS_CH[2].LIMITH*																					
			Set	1										Enable																					
			Disabled	0										Read: Disabled																					
			Enabled	1										Read: Enabled																					
L	RW	CH2LIMITL												Write '1' to Enable interrupt for CH[2].LIMITL event See *EVENTS_CH[2].LIMITL*																					
			Set	1										Enable																					
			Disabled	0										Read: Disabled																					
			Enabled	1										Read: Enabled																					
M	RW	CH3LIMITH												Write '1' to Enable interrupt for CH[3].LIMITH event See *EVENTS_CH[3].LIMITH*																					
			Set	1										Enable																					
			Disabled	0										Read: Disabled																					
			Enabled	1										Read: Enabled																					
N	RW	CH3LIMITL												Write '1' to Enable interrupt for CH[3].LIMITL event See *EVENTS_CH[3].LIMITL*																					
			Set	1										Enable																					
			Disabled	0										Read: Disabled																					
			Enabled	1										Read: Enabled																					
O	RW	CH4LIMITH												Write '1' to Enable interrupt for CH[4].LIMITH event																					

Bit number				31	30	29	28	27	26	25	24	23	22	21	20	19	18	17	16	15	14	13	12	11	10	9	8	7	6	5	4	3	2	1	0
Id														V	U	T	S	R	Q	P	O	N	M	L	K	J	I	H	G	F	E	D	C	B	A
Reset 0x00000000				**0**	**0**	**0**	**0**	**0**	**0**	**0**	**0**	**0**	**0**	**0**	**0**	**0**	**0**	**0**	**0**	**0**	**0**	**0**	**0**	**0**	**0**	**0**	**0**	**0**	**0**	**0**	**0**	**0**	**0**	**0**	**0**
Id	**RW**	**Field**	**Value Id**	**Value**										**Description**																					
														See *EVENTS_CH[4].LIMITH*																					
			Set	1										Enable																					
			Disabled	0										Read: Disabled																					
			Enabled	1										Read: Enabled																					
P	RW	CH4LIMITL												Write '1' to Enable interrupt for CH[4].LIMITL event																					
														See *EVENTS_CH[4].LIMITL*																					
			Set	1										Enable																					
			Disabled	0										Read: Disabled																					
			Enabled	1										Read: Enabled																					
Q	RW	CH5LIMITH												Write '1' to Enable interrupt for CH[5].LIMITH event																					
														See *EVENTS_CH[5].LIMITH*																					
			Set	1										Enable																					
			Disabled	0										Read: Disabled																					
			Enabled	1										Read: Enabled																					
R	RW	CH5LIMITL												Write '1' to Enable interrupt for CH[5].LIMITL event																					
														See *EVENTS_CH[5].LIMITL*																					
			Set	1										Enable																					
			Disabled	0										Read: Disabled																					
			Enabled	1										Read: Enabled																					
S	RW	CH6LIMITH												Write '1' to Enable interrupt for CH[6].LIMITH event																					
														See *EVENTS_CH[6].LIMITH*																					
			Set	1										Enable																					
			Disabled	0										Read: Disabled																					
			Enabled	1										Read: Enabled																					
T	RW	CH6LIMITL												Write '1' to Enable interrupt for CH[6].LIMITL event																					
														See *EVENTS_CH[6].LIMITL*																					
			Set	1										Enable																					
			Disabled	0										Read: Disabled																					
			Enabled	1										Read: Enabled																					
U	RW	CH7LIMITH												Write '1' to Enable interrupt for CH[7].LIMITH event																					
														See *EVENTS_CH[7].LIMITH*																					
			Set	1										Enable																					
			Disabled	0										Read: Disabled																					
			Enabled	1										Read: Enabled																					
V	RW	CH7LIMITL												Write '1' to Enable interrupt for CH[7].LIMITL event																					
														See *EVENTS_CH[7].LIMITL*																					
			Set	1										Enable																					
			Disabled	0										Read: Disabled																					
			Enabled	1										Read: Enabled																					

37.11.3 INTENCLR

Address offset: 0x308

Disable interrupt

Bit number				31	30	29	28	27	26	25	24	23	22	21	20	19	18	17	16	15	14	13	12	11	10	9	8	7	6	5	4	3	2	1	0
Id														V	U	T	S	R	Q	P	O	N	M	L	K	J	I	H	G	F	E	D	C	B	A
Reset 0x00000000				**0**	**0**	**0**	**0**	**0**	**0**	**0**	**0**	**0**	**0**	**0**	**0**	**0**	**0**	**0**	**0**	**0**	**0**	**0**	**0**	**0**	**0**	**0**	**0**	**0**	**0**	**0**	**0**	**0**	**0**	**0**	**0**
Id	**RW**	**Field**	**Value Id**	**Value**										**Description**																					
A	RW	STARTED												Write '1' to Disable interrupt for STARTED event																					
														See *EVENTS_STARTED*																					
			Clear	1										Disable																					

Bit number				31	30	29	28	27	26	25	24	23	22	21	20	19	18	17	16	15	14	13	12	11	10	9	8	7	6	5	4	3	2	1	0
Id														V	U	T	S	R	Q	P	O	N	M	L	K	J	I	H	G	F	E	D	C	B	A
Reset 0x00000000				**0**	**0**	**0**	**0**	**0**	**0**	**0**	**0**	**0**	**0**	**0**	**0**	**0**	**0**	**0**	**0**	**0**	**0**	**0**	**0**	**0**	**0**	**0**	**0**	**0**	**0**	**0**	**0**	**0**	**0**	**0**	**0**
Id	**RW**	**Field**	**Value Id**	**Value**										**Description**																					
			Disabled	0										Read: Disabled																					
			Enabled	1										Read: Enabled																					
B	RW	END												Write '1' to Disable interrupt for END event See *EVENTS_END*																					
			Clear	1										Disable																					
			Disabled	0										Read: Disabled																					
			Enabled	1										Read: Enabled																					
C	RW	DONE												Write '1' to Disable interrupt for DONE event See *EVENTS_DONE*																					
			Clear	1										Disable																					
			Disabled	0										Read: Disabled																					
			Enabled	1										Read: Enabled																					
D	RW	RESULTDONE												Write '1' to Disable interrupt for RESULTDONE event See *EVENTS_RESULTDONE*																					
			Clear	1										Disable																					
			Disabled	0										Read: Disabled																					
			Enabled	1										Read: Enabled																					
E	RW	CALIBRATEDONE												Write '1' to Disable interrupt for CALIBRATEDONE event See *EVENTS_CALIBRATEDONE*																					
			Clear	1										Disable																					
			Disabled	0										Read: Disabled																					
			Enabled	1										Read: Enabled																					
F	RW	STOPPED												Write '1' to Disable interrupt for STOPPED event See *EVENTS_STOPPED*																					
			Clear	1										Disable																					
			Disabled	0										Read: Disabled																					
			Enabled	1										Read: Enabled																					
G	RW	CH0LIMITH												Write '1' to Disable interrupt for CH[0].LIMITH event See *EVENTS_CH[0].LIMITH*																					
			Clear	1										Disable																					
			Disabled	0										Read: Disabled																					
			Enabled	1										Read: Enabled																					
H	RW	CH0LIMITL												Write '1' to Disable interrupt for CH[0].LIMITL event See *EVENTS_CH[0].LIMITL*																					
			Clear	1										Disable																					
			Disabled	0										Read: Disabled																					
			Enabled	1										Read: Enabled																					
I	RW	CH1LIMITH												Write '1' to Disable interrupt for CH[1].LIMITH event See *EVENTS_CH[1].LIMITH*																					
			Clear	1										Disable																					
			Disabled	0										Read: Disabled																					
			Enabled	1										Read: Enabled																					
J	RW	CH1LIMITL												Write '1' to Disable interrupt for CH[1].LIMITL event See *EVENTS_CH[1].LIMITL*																					
			Clear	1										Disable																					
			Disabled	0										Read: Disabled																					
			Enabled	1										Read: Enabled																					
K	RW	CH2LIMITH												Write '1' to Disable interrupt for CH[2].LIMITH event See *EVENTS_CH[2].LIMITH*																					
			Clear	1										Disable																					
			Disabled	0										Read: Disabled																					

Bit number				31	30	29	28	27	26	25	24	23	22	21	20	19	18	17	16	15	14	13	12	11	10	9	8	7	6	5	4	3	2	1	0
Id														V	U	T	S	R	Q	P	O	N	M	L	K	J	I	H	G	F	E	D	C	B	A
Reset 0x00000000				**0**	**0**	**0**	**0**	**0**	**0**	**0**	**0**	**0**	**0**	**0**	**0**	**0**	**0**	**0**	**0**	**0**	**0**	**0**	**0**	**0**	**0**	**0**	**0**	**0**	**0**	**0**	**0**	**0**	**0**	**0**	**0**
Id	**RW**	**Field**	**Value Id**	**Value**										**Description**																					
			Enabled	1										Read: Enabled																					
L	RW	CH2LIMITL												Write '1' to Disable interrupt for CH[2].LIMITL event See *EVENTS_CH[2].LIMITL*																					
			Clear	1										Disable																					
			Disabled	0										Read: Disabled																					
			Enabled	1										Read: Enabled																					
M	RW	CH3LIMITH												Write '1' to Disable interrupt for CH[3].LIMITH event See *EVENTS_CH[3].LIMITH*																					
			Clear	1										Disable																					
			Disabled	0										Read: Disabled																					
			Enabled	1										Read: Enabled																					
N	RW	CH3LIMITL												Write '1' to Disable interrupt for CH[3].LIMITL event See *EVENTS_CH[3].LIMITL*																					
			Clear	1										Disable																					
			Disabled	0										Read: Disabled																					
			Enabled	1										Read: Enabled																					
O	RW	CH4LIMITH												Write '1' to Disable interrupt for CH[4].LIMITH event See *EVENTS_CH[4].LIMITH*																					
			Clear	1										Disable																					
			Disabled	0										Read: Disabled																					
			Enabled	1										Read: Enabled																					
P	RW	CH4LIMITL												Write '1' to Disable interrupt for CH[4].LIMITL event See *EVENTS_CH[4].LIMITL*																					
			Clear	1										Disable																					
			Disabled	0										Read: Disabled																					
			Enabled	1										Read: Enabled																					
Q	RW	CH5LIMITH												Write '1' to Disable interrupt for CH[5].LIMITH event See *EVENTS_CH[5].LIMITH*																					
			Clear	1										Disable																					
			Disabled	0										Read: Disabled																					
			Enabled	1										Read: Enabled																					
R	RW	CH5LIMITL												Write '1' to Disable interrupt for CH[5].LIMITL event See *EVENTS_CH[5].LIMITL*																					
			Clear	1										Disable																					
			Disabled	0										Read: Disabled																					
			Enabled	1										Read: Enabled																					
S	RW	CH6LIMITH												Write '1' to Disable interrupt for CH[6].LIMITH event See *EVENTS_CH[6].LIMITH*																					
			Clear	1										Disable																					
			Disabled	0										Read: Disabled																					
			Enabled	1										Read: Enabled																					
T	RW	CH6LIMITL												Write '1' to Disable interrupt for CH[6].LIMITL event See *EVENTS_CH[6].LIMITL*																					
			Clear	1										Disable																					
			Disabled	0										Read: Disabled																					
			Enabled	1										Read: Enabled																					
U	RW	CH7LIMITH												Write '1' to Disable interrupt for CH[7].LIMITH event See *EVENTS_CH[7].LIMITH*																					
			Clear	1										Disable																					
			Disabled	0										Read: Disabled																					
			Enabled	1										Read: Enabled																					

Bit number				31	30	29	28	27	26	25	24	23	22	21	20	19	18	17	16	15	14	13	12	11	10	9	8	7	6	5	4	3	2	1	0
Id														V	U	T	S	R	Q	P	O	N	M	L	K	J	I	H	G	F	E	D	C	B	A
Reset 0x00000000				**0**	**0**	**0**	**0**	**0**	**0**	**0**	**0**	**0**	**0**	**0**	**0**	**0**	**0**	**0**	**0**	**0**	**0**	**0**	**0**	**0**	**0**	**0**	**0**	**0**	**0**	**0**	**0**	**0**	**0**	**0**	**0**
Id	**RW**	**Field**	**Value Id**	**Value**										**Description**																					
V	RW	CH7LIMITL												Write '1' to Disable interrupt for CH[7].LIMITL event See *EVENTS_CH[7].LIMITL*																					
			Clear	1										Disable																					
			Disabled	0										Read: Disabled																					
			Enabled	1										Read: Enabled																					

37.11.4 STATUS

Address offset: 0x400

Status

Bit number				31	30	29	28	27	26	25	24	23	22	21	20	19	18	17	16	15	14	13	12	11	10	9	8	7	6	5	4	3	2	1	0
Id																																			A
Reset 0x00000000				**0**	**0**	**0**	**0**	**0**	**0**	**0**	**0**	**0**	**0**	**0**	**0**	**0**	**0**	**0**	**0**	**0**	**0**	**0**	**0**	**0**	**0**	**0**	**0**	**0**	**0**	**0**	**0**	**0**	**0**	**0**	**0**
Id	**RW**	**Field**	**Value Id**	**Value**										**Description**																					
A	R	STATUS												Status																					
			Ready	0										ADC is ready. No on-going conversion.																					
			Busy	1										ADC is busy. Conversion in progress.																					

37.11.5 ENABLE

Address offset: 0x500

Enable or disable ADC

Bit number				31	30	29	28	27	26	25	24	23	22	21	20	19	18	17	16	15	14	13	12	11	10	9	8	7	6	5	4	3	2	1	0
Id																																			A
Reset 0x00000000				**0**	**0**	**0**	**0**	**0**	**0**	**0**	**0**	**0**	**0**	**0**	**0**	**0**	**0**	**0**	**0**	**0**	**0**	**0**	**0**	**0**	**0**	**0**	**0**	**0**	**0**	**0**	**0**	**0**	**0**	**0**	**0**
Id	**RW**	**Field**	**Value Id**	**Value**										**Description**																					
A	RW	ENABLE												Enable or disable ADC																					
			Disabled	0										Disable ADC																					
			Enabled	1										Enable ADC When enabled, the ADC will acquire access to the analog input pins specified in the CH[n].PSELP and CH[n].PSELN registers.																					

37.11.6 CH[0].PSELP

Address offset: 0x510

Input positive pin selection for CH[0]

Bit number				31	30	29	28	27	26	25	24	23	22	21	20	19	18	17	16	15	14	13	12	11	10	9	8	7	6	5	4	3	2	1	0
Id																															A	A	A	A	A
Reset 0x00000000				**0**	**0**	**0**	**0**	**0**	**0**	**0**	**0**	**0**	**0**	**0**	**0**	**0**	**0**	**0**	**0**	**0**	**0**	**0**	**0**	**0**	**0**	**0**	**0**	**0**	**0**	**0**	**0**	**0**	**0**	**0**	**0**
Id	**RW**	**Field**	**Value Id**	**Value**										**Description**																					
A	RW	PSELP												Analog positive input channel																					
			NC	0										Not connected																					
			AnalogInput0	1										AIN0																					
			AnalogInput1	2										AIN1																					
			AnalogInput2	3										AIN2																					
			AnalogInput3	4										AIN3																					
			AnalogInput4	5										AIN4																					
			AnalogInput5	6										AIN5																					
			AnalogInput6	7										AIN6																					
			AnalogInput7	8										AIN7																					
			VDD	9										VDD																					

37.11.7 CH[0].PSELN

Address offset: 0x514

Input negative pin selection for CH[0]

Bit number				31	30	29	28	27	26	25	24	23	22	21	20	19	18	17	16	15	14	13	12	11	10	9	8	7	6	5	4	3	2	1	0
Id																															A	A	A	A	A
Reset 0x00000000				**0**	**0**	**0**	**0**	**0**	**0**	**0**	**0**	**0**	**0**	**0**	**0**	**0**	**0**	**0**	**0**	**0**	**0**	**0**	**0**	**0**	**0**	**0**	**0**	**0**	**0**	**0**	**0**	**0**	**0**	**0**	**0**
Id	**RW**	**Field**	**Value Id**	**Value**								**Description**																							
A	RW	PSELN										Analog negative input, enables differential channel																							
			NC	0								Not connected																							
			AnalogInput0	1								AIN0																							
			AnalogInput1	2								AIN1																							
			AnalogInput2	3								AIN2																							
			AnalogInput3	4								AIN3																							
			AnalogInput4	5								AIN4																							
			AnalogInput5	6								AIN5																							
			AnalogInput6	7								AIN6																							
			AnalogInput7	8								AIN7																							
			VDD	9								VDD																							

37.11.8 CH[0].CONFIG

Address offset: 0x518

Input configuration for CH[0]

Bit number				31	30	29	28	27	26	25	24	23	22	21	20	19	18	17	16	15	14	13	12	11	10	9	8	7	6	5	4	3	2	1	0
Id											G				F		E	E	E				D		C	C	C			B	B			A	A
Reset 0x00020000				**0**	**0**	**0**	**0**	**0**	**0**	**0**	**0**	**0**	**0**	**0**	**0**	**0**	**0**	**1**	**0**	**0**	**0**	**0**	**0**	**0**	**0**	**0**	**0**	**0**	**0**	**0**	**0**	**0**	**0**	**0**	**0**
Id	**RW**	**Field**	**Value Id**	**Value**								**Description**																							
A	RW	RESP										Positive channel resistor control																							
			Bypass	0								Bypass resistor ladder																							
			Pulldown	1								Pull-down to GND																							
			Pullup	2								Pull-up to VDD																							
			VDD1_2	3								Set input at VDD/2																							
B	RW	RESN										Negative channel resistor control																							
			Bypass	0								Bypass resistor ladder																							
			Pulldown	1								Pull-down to GND																							
			Pullup	2								Pull-up to VDD																							
			VDD1_2	3								Set input at VDD/2																							
C	RW	GAIN										Gain control																							
			Gain1_6	0								1/6																							
			Gain1_5	1								1/5																							
			Gain1_4	2								1/4																							
			Gain1_3	3								1/3																							
			Gain1_2	4								1/2																							
			Gain1	5								1																							
			Gain2	6								2																							
			Gain4	7								4																							
D	RW	REFSEL										Reference control																							
			Internal	0								Internal reference (0.6 V)																							
			VDD1_4	1								VDD/4 as reference																							
E	RW	TACQ										Acquisition time, the time the ADC uses to sample the input voltage																							
			3us	0								3 us																							
			5us	1								5 us																							
			10us	2								10 us																							
			15us	3								15 us																							
			20us	4								20 us																							

Bit number				31	30	29	28	27	26	25	24	23	22	21	20	19	18	17	16	15	14	13	12	11	10	9	8	7	6	5	4	3	2	1	0
Id											G				F		E	E	E				D		C	C	C			B	B			A	A
Reset 0x00020000				**0**	**0**	**0**	**0**	**0**	**0**	**0**	**0**	**0**	**0**	**0**	**0**	**0**	**0**	**1**	**0**	**0**	**0**	**0**	**0**	**0**	**0**	**0**	**0**	**0**	**0**	**0**	**0**	**0**	**0**	**0**	**0**
Id	**RW**	**Field**	**Value Id**	**Value**								**Description**																							
			40us	5								40 us																							
F	RW	MODE										Enable differential mode																							
			SE	0								Single ended, PSELN will be ignored, negative input to ADC shorted to GND																							
			Diff	1								Differential																							
G	RW	BURST										Enable burst mode																							
			Disabled	0								Burst mode is disabled (normal operation)																							
			Enabled	1								Burst mode is enabled. SAADC takes 2^OVERSAMPLE number of samples as fast as it can, and sends the average to Data RAM.																							

37.11.9 CH[0].LIMIT

Address offset: 0x51C

High/low limits for event monitoring a channel

Bit number				31	30	29	28	27	26	25	24	23	22	21	20	19	18	17	16	15	14	13	12	11	10	9	8	7	6	5	4	3	2	1	0
Id				B	B	B	B	B	B	B	B	B	B	B	B	B	B	B	B	A	A	A	A	A	A	A	A	A	A	A	A	A	A	A	A
Reset 0x7FFF8000				**0**	**1**	**1**	**1**	**1**	**1**	**1**	**1**	**1**	**1**	**1**	**1**	**1**	**1**	**1**	**1**	**1**	**0**	**0**	**0**	**0**	**0**	**0**	**0**	**0**	**0**	**0**	**0**	**0**	**0**	**0**	**0**
Id	**RW**	**Field**	**Value Id**	**Value**								**Description**																							
A	RW	LOW		[-32768 to +32767]								Low level limit																							
B	RW	HIGH		[-32768 to +32767]								High level limit																							

37.11.10 CH[1].PSELP

Address offset: 0x520

Input positive pin selection for CH[1]

Bit number				31	30	29	28	27	26	25	24	23	22	21	20	19	18	17	16	15	14	13	12	11	10	9	8	7	6	5	4	3	2	1	0
Id																															A	A	A	A	A
Reset 0x00000000				**0**	**0**	**0**	**0**	**0**	**0**	**0**	**0**	**0**	**0**	**0**	**0**	**0**	**0**	**0**	**0**	**0**	**0**	**0**	**0**	**0**	**0**	**0**	**0**	**0**	**0**	**0**	**0**	**0**	**0**	**0**	**0**
Id	**RW**	**Field**	**Value Id**	**Value**								**Description**																							
A	RW	PSELP										Analog positive input channel																							
			NC	0								Not connected																							
			AnalogInput0	1								AIN0																							
			AnalogInput1	2								AIN1																							
			AnalogInput2	3								AIN2																							
			AnalogInput3	4								AIN3																							
			AnalogInput4	5								AIN4																							
			AnalogInput5	6								AIN5																							
			AnalogInput6	7								AIN6																							
			AnalogInput7	8								AIN7																							
			VDD	9								VDD																							

37.11.11 CH[1].PSELN

Address offset: 0x524

Input negative pin selection for CH[1]

Bit number				31	30	29	28	27	26	25	24	23	22	21	20	19	18	17	16	15	14	13	12	11	10	9	8	7	6	5	4	3	2	1	0
Id																															A	A	A	A	A
Reset 0x00000000				**0**	**0**	**0**	**0**	**0**	**0**	**0**	**0**	**0**	**0**	**0**	**0**	**0**	**0**	**0**	**0**	**0**	**0**	**0**	**0**	**0**	**0**	**0**	**0**	**0**	**0**	**0**	**0**	**0**	**0**	**0**	**0**
Id	**RW**	**Field**	**Value Id**	**Value**								**Description**																							
A	RW	PSELN										Analog negative input, enables differential channel																							
			NC	0								Not connected																							
			AnalogInput0	1								AIN0																							

Bit number				31	30	29	28	27	26	25	24	23	22	21	20	19	18	17	16	15	14	13	12	11	10	9	8	7	6	5	4	3	2	1	0
Id																															A	A	A	A	A
Reset 0x00000000				**0**	**0**	**0**	**0**	**0**	**0**	**0**	**0**	**0**	**0**	**0**	**0**	**0**	**0**	**0**	**0**	**0**	**0**	**0**	**0**	**0**	**0**	**0**	**0**	**0**	**0**	**0**	**0**	**0**	**0**	**0**	**0**
Id	**RW**	**Field**	**Value Id**	**Value**								**Description**																							
			AnalogInput1	2								AIN1																							
			AnalogInput2	3								AIN2																							
			AnalogInput3	4								AIN3																							
			AnalogInput4	5								AIN4																							
			AnalogInput5	6								AIN5																							
			AnalogInput6	7								AIN6																							
			AnalogInput7	8								AIN7																							
			VDD	9								VDD																							

37.11.12 CH[1].CONFIG

Address offset: 0x528

Input configuration for CH[1]

Bit number				31	30	29	28	27	26	25	24	23	22	21	20	19	18	17	16	15	14	13	12	11	10	9	8	7	6	5	4	3	2	1	0
Id											G				F		E	E	E				D		C	C	C			B	B			A	A
Reset 0x00020000				**0**	**0**	**0**	**0**	**0**	**0**	**0**	**0**	**0**	**0**	**0**	**0**	**0**	**0**	**1**	**0**	**0**	**0**	**0**	**0**	**0**	**0**	**0**	**0**	**0**	**0**	**0**	**0**	**0**	**0**	**0**	**0**
Id	**RW**	**Field**	**Value Id**	**Value**								**Description**																							
A	RW	RESP										Positive channel resistor control																							
			Bypass	0								Bypass resistor ladder																							
			Pulldown	1								Pull-down to GND																							
			Pullup	2								Pull-up to VDD																							
			VDD1_2	3								Set input at VDD/2																							
B	RW	RESN										Negative channel resistor control																							
			Bypass	0								Bypass resistor ladder																							
			Pulldown	1								Pull-down to GND																							
			Pullup	2								Pull-up to VDD																							
			VDD1_2	3								Set input at VDD/2																							
C	RW	GAIN										Gain control																							
			Gain1_6	0								1/6																							
			Gain1_5	1								1/5																							
			Gain1_4	2								1/4																							
			Gain1_3	3								1/3																							
			Gain1_2	4								1/2																							
			Gain1	5								1																							
			Gain2	6								2																							
			Gain4	7								4																							
D	RW	REFSEL										Reference control																							
			Internal	0								Internal reference (0.6 V)																							
			VDD1_4	1								VDD/4 as reference																							
E	RW	TACQ										Acquisition time, the time the ADC uses to sample the input voltage																							
			3us	0								3 us																							
			5us	1								5 us																							
			10us	2								10 us																							
			15us	3								15 us																							
			20us	4								20 us																							
			40us	5								40 us																							
F	RW	MODE										Enable differential mode																							
			SE	0								Single ended, PSELN will be ignored, negative input to ADC shorted to GND																							
			Diff	1								Differential																							
G	RW	BURST										Enable burst mode																							
			Disabled	0								Burst mode is disabled (normal operation)																							

Bit number				31	30	29	28	27	26	25	24	23	22	21	20	19	18	17	16	15	14	13	12	11	10	9	8	7	6	5	4	3	2	1	0
Id											G				F		E	E	E				D		C	C	C			B	B			A	A
Reset 0x00020000				**0**	**0**	**0**	**0**	**0**	**0**	**0**	**0**	**0**	**0**	**0**	**0**	**0**	**0**	**1**	**0**	**0**	**0**	**0**	**0**	**0**	**0**	**0**	**0**	**0**	**0**	**0**	**0**	**0**	**0**	**0**	**0**
Id	**RW**	**Field**	**Value Id**	**Value**								**Description**																							
			Enabled	1								Burst mode is enabled. SAADC takes 2^OVERSAMPLE number of samples as fast as it can, and sends the average to Data RAM.																							

37.11.13 CH[1].LIMIT

Address offset: 0x52C

High/low limits for event monitoring a channel

Bit number				31	30	29	28	27	26	25	24	23	22	21	20	19	18	17	16	15	14	13	12	11	10	9	8	7	6	5	4	3	2	1	0
Id				B	B	B	B	B	B	B	B	B	B	B	B	B	B	B	B	A	A	A	A	A	A	A	A	A	A	A	A	A	A	A	A
Reset 0x7FFF8000				**0**	**1**	**1**	**1**	**1**	**1**	**1**	**1**	**1**	**1**	**1**	**1**	**1**	**1**	**1**	**1**	**0**	**0**	**0**	**0**	**0**	**0**	**0**	**0**	**0**	**0**	**0**	**0**	**0**	**0**	**0**	**0**
Id	**RW**	**Field**	**Value Id**	**Value**								**Description**																							
A	RW	LOW		[-32768 to +32767]								Low level limit																							
B	RW	HIGH		[-32768 to +32767]								High level limit																							

37.11.14 CH[2].PSELP

Address offset: 0x530

Input positive pin selection for CH[2]

Bit number				31	30	29	28	27	26	25	24	23	22	21	20	19	18	17	16	15	14	13	12	11	10	9	8	7	6	5	4	3	2	1	0
Id																															A	A	A	A	A
Reset 0x00000000				**0**	**0**	**0**	**0**	**0**	**0**	**0**	**0**	**0**	**0**	**0**	**0**	**0**	**0**	**0**	**0**	**0**	**0**	**0**	**0**	**0**	**0**	**0**	**0**	**0**	**0**	**0**	**0**	**0**	**0**	**0**	**0**
Id	**RW**	**Field**	**Value Id**	**Value**								**Description**																							
A	RW	PSELP										Analog positive input channel																							
			NC	0								Not connected																							
			AnalogInput0	1								AIN0																							
			AnalogInput1	2								AIN1																							
			AnalogInput2	3								AIN2																							
			AnalogInput3	4								AIN3																							
			AnalogInput4	5								AIN4																							
			AnalogInput5	6								AIN5																							
			AnalogInput6	7								AIN6																							
			AnalogInput7	8								AIN7																							
			VDD	9								VDD																							

37.11.15 CH[2].PSELN

Address offset: 0x534

Input negative pin selection for CH[2]

Bit number				31	30	29	28	27	26	25	24	23	22	21	20	19	18	17	16	15	14	13	12	11	10	9	8	7	6	5	4	3	2	1	0
Id																															A	A	A	A	A
Reset 0x00000000				**0**	**0**	**0**	**0**	**0**	**0**	**0**	**0**	**0**	**0**	**0**	**0**	**0**	**0**	**0**	**0**	**0**	**0**	**0**	**0**	**0**	**0**	**0**	**0**	**0**	**0**	**0**	**0**	**0**	**0**	**0**	**0**
Id	**RW**	**Field**	**Value Id**	**Value**								**Description**																							
A	RW	PSELN										Analog negative input, enables differential channel																							
			NC	0								Not connected																							
			AnalogInput0	1								AIN0																							
			AnalogInput1	2								AIN1																							
			AnalogInput2	3								AIN2																							
			AnalogInput3	4								AIN3																							
			AnalogInput4	5								AIN4																							
			AnalogInput5	6								AIN5																							
			AnalogInput6	7								AIN6																							
			AnalogInput7	8								AIN7																							

Bit number				31	30	29	28	27	26	25	24	23	22	21	20	19	18	17	16	15	14	13	12	11	10	9	8	7	6	5	4	3	2	1	0
Id																															A	A	A	A	A
Reset 0x00000000				**0**	**0**	**0**	**0**	**0**	**0**	**0**	**0**	**0**	**0**	**0**	**0**	**0**	**0**	**0**	**0**	**0**	**0**	**0**	**0**	**0**	**0**	**0**	**0**	**0**	**0**	**0**	**0**	**0**	**0**	**0**	**0**
Id	**RW**	**Field**	**Value Id**	**Value**								**Description**																							
			VDD	9								VDD																							

37.11.16 CH[2].CONFIG

Address offset: 0x538

Input configuration for CH[2]

Bit number				31	30	29	28	27	26	25	24	23	22	21	20	19	18	17	16	15	14	13	12	11	10	9	8	7	6	5	4	3	2	1	0
Id											G				F		E	E	E				D		C	C	C			B	B			A	A
Reset 0x00020000				**0**	**0**	**0**	**0**	**0**	**0**	**0**	**0**	**0**	**0**	**0**	**0**	**0**	**0**	**1**	**0**	**0**	**0**	**0**	**0**	**0**	**0**	**0**	**0**	**0**	**0**	**0**	**0**	**0**	**0**	**0**	**0**
Id	**RW**	**Field**	**Value Id**	**Value**								**Description**																							
A	RW	RESP										Positive channel resistor control																							
			Bypass	0								Bypass resistor ladder																							
			Pulldown	1								Pull-down to GND																							
			Pullup	2								Pull-up to VDD																							
			VDD1_2	3								Set input at VDD/2																							
B	RW	RESN										Negative channel resistor control																							
			Bypass	0								Bypass resistor ladder																							
			Pulldown	1								Pull-down to GND																							
			Pullup	2								Pull-up to VDD																							
			VDD1_2	3								Set input at VDD/2																							
C	RW	GAIN										Gain control																							
			Gain1_6	0								1/6																							
			Gain1_5	1								1/5																							
			Gain1_4	2								1/4																							
			Gain1_3	3								1/3																							
			Gain1_2	4								1/2																							
			Gain1	5								1																							
			Gain2	6								2																							
			Gain4	7								4																							
D	RW	REFSEL										Reference control																							
			Internal	0								Internal reference (0.6 V)																							
			VDD1_4	1								VDD/4 as reference																							
E	RW	TACQ										Acquisition time, the time the ADC uses to sample the input voltage																							
			3us	0								3 us																							
			5us	1								5 us																							
			10us	2								10 us																							
			15us	3								15 us																							
			20us	4								20 us																							
			40us	5								40 us																							
F	RW	MODE										Enable differential mode																							
			SE	0								Single ended, PSELN will be ignored, negative input to ADC shorted to GND																							
			Diff	1								Differential																							
G	RW	BURST										Enable burst mode																							
			Disabled	0								Burst mode is disabled (normal operation)																							
			Enabled	1								Burst mode is enabled. SAADC takes 2^OVERSAMPLE number of samples as fast as it can, and sends the average to Data RAM.																							

37.11.17 CH[2].LIMIT

Address offset: 0x53C

High/low limits for event monitoring a channel

Bit number				31	30	29	28	27	26	25	24	23	22	21	20	19	18	17	16	15	14	13	12	11	10	9	8	7	6	5	4	3	2	1	0
Id				B	B	B	B	B	B	B	B	B	B	B	B	B	B	B	B	A	A	A	A	A	A	A	A	A	A	A	A	A	A	A	A
Reset 0x7FFF8000				**0**	**1**	**1**	**1**	**1**	**1**	**1**	**1**	**1**	**1**	**1**	**1**	**1**	**1**	**1**	**1**	**1**	**0**	**0**	**0**	**0**	**0**	**0**	**0**	**0**	**0**	**0**	**0**	**0**	**0**	**0**	**0**
Id	**RW**	**Field**	**Value Id**	**Value**								**Description**																							
A	RW	LOW		[-32768 to +32767]								Low level limit																							
B	RW	HIGH		[-32768 to +32767]								High level limit																							

37.11.18 CH[3].PSELP

Address offset: 0x540

Input positive pin selection for CH[3]

Bit number				31	30	29	28	27	26	25	24	23	22	21	20	19	18	17	16	15	14	13	12	11	10	9	8	7	6	5	4	3	2	1	0
Id																															A	A	A	A	A
Reset 0x00000000				**0**	**0**	**0**	**0**	**0**	**0**	**0**	**0**	**0**	**0**	**0**	**0**	**0**	**0**	**0**	**0**	**0**	**0**	**0**	**0**	**0**	**0**	**0**	**0**	**0**	**0**	**0**	**0**	**0**	**0**	**0**	**0**
Id	**RW**	**Field**	**Value Id**	**Value**								**Description**																							
A	RW	PSELP										Analog positive input channel																							
			NC	0								Not connected																							
			AnalogInput0	1								AIN0																							
			AnalogInput1	2								AIN1																							
			AnalogInput2	3								AIN2																							
			AnalogInput3	4								AIN3																							
			AnalogInput4	5								AIN4																							
			AnalogInput5	6								AIN5																							
			AnalogInput6	7								AIN6																							
			AnalogInput7	8								AIN7																							
			VDD	9								VDD																							

37.11.19 CH[3].PSELN

Address offset: 0x544

Input negative pin selection for CH[3]

Bit number				31	30	29	28	27	26	25	24	23	22	21	20	19	18	17	16	15	14	13	12	11	10	9	8	7	6	5	4	3	2	1	0
Id																															A	A	A	A	A
Reset 0x00000000				**0**	**0**	**0**	**0**	**0**	**0**	**0**	**0**	**0**	**0**	**0**	**0**	**0**	**0**	**0**	**0**	**0**	**0**	**0**	**0**	**0**	**0**	**0**	**0**	**0**	**0**	**0**	**0**	**0**	**0**	**0**	**0**
Id	**RW**	**Field**	**Value Id**	**Value**								**Description**																							
A	RW	PSELN										Analog negative input, enables differential channel																							
			NC	0								Not connected																							
			AnalogInput0	1								AIN0																							
			AnalogInput1	2								AIN1																							
			AnalogInput2	3								AIN2																							
			AnalogInput3	4								AIN3																							
			AnalogInput4	5								AIN4																							
			AnalogInput5	6								AIN5																							
			AnalogInput6	7								AIN6																							
			AnalogInput7	8								AIN7																							
			VDD	9								VDD																							

37.11.20 CH[3].CONFIG

Address offset: 0x548

Input configuration for CH[3]

Bit number				31	30	29	28	27	26	25	24	23	22	21	20	19	18	17	16	15	14	13	12	11	10	9	8	7	6	5	4	3	2	1	0
Id											G				F		E	E	E				D		C	C	C			B	B			A	A
Reset 0x00020000				**0**	**0**	**0**	**0**	**0**	**0**	**0**	**0**	**0**	**0**	**0**	**0**	**0**	**0**	**1**	**0**	**0**	**0**	**0**	**0**	**0**	**0**	**0**	**0**	**0**	**0**	**0**	**0**	**0**	**0**	**0**	**0**
Id	**RW**	**Field**	**Value Id**	**Value**								**Description**																							
A	RW	RESP										Positive channel resistor control																							

Bit number				31	30	29	28	27	26	25	24	23	22	21	20	19	18	17	16	15	14	13	12	11	10	9	8	7	6	5	4	3	2	1	0
Id											G				F		E	E	E				D		C	C	C			B	B			A	A
Reset 0x00020000				**0**	**0**	**0**	**0**	**0**	**0**	**0**	**0**	**0**	**0**	**0**	**0**	**0**	**0**	**1**	**0**	**0**	**0**	**0**	**0**	**0**	**0**	**0**	**0**	**0**	**0**	**0**	**0**	**0**	**0**	**0**	**0**
Id	**RW**	**Field**	**Value Id**	**Value**																															
			Bypass	0																															
			Pulldown	1																															
			Pullup	2																															
			VDD1_2	3																															
B	RW	RESN																																	
			Bypass	0																															
			Pulldown	1																															
			Pullup	2																															
			VDD1_2	3																															
C	RW	GAIN																																	
			Gain1_6	0																															
			Gain1_5	1																															
			Gain1_4	2																															
			Gain1_3	3																															
			Gain1_2	4																															
			Gain1	5																															
			Gain2	6																															
			Gain4	7																															
D	RW	REFSEL																																	
			Internal	0																															
			VDD1_4	1																															
E	RW	TACQ																																	
			3us	0																															
			5us	1																															
			10us	2																															
			15us	3																															
			20us	4																															
			40us	5																															
F	RW	MODE																																	
			SE	0																															
			Diff	1																															
G	RW	BURST																																	
			Disabled	0																															
			Enabled	1																															

37.11.21 CH[3].LIMIT

Address offset: 0x54C

High/low limits for event monitoring a channel

Bit number				31	30	29	28	27	26	25	24	23	22	21	20	19	18	17	16	15	14	13	12	11	10	9	8	7	6	5	4	3	2	1	0
Id				B	B	B	B	B	B	B	B	B	B	B	B	B	B	B	B	A	A	A	A	A	A	A	A	A	A	A	A	A	A	A	A
Reset 0x7FFF8000				**0**	**1**	**1**	**1**	**1**	**1**	**1**	**1**	**1**	**1**	**1**	**1**	**1**	**1**	**1**	**1**	**1**	**0**	**0**	**0**	**0**	**0**	**0**	**0**	**0**	**0**	**0**	**0**	**0**	**0**	**0**	**0**
Id	**RW**	**Field**	**Value Id**	**Value**																															
A	RW	LOW		[-32768 to +32767]																															
B	RW	HIGH		[-32768 to +32767]																															

37.11.22 CH[4].PSELP

Address offset: 0x550

Input positive pin selection for CH[4]

Bit number				31	30	29	28	27	26	25	24	23	22	21	20	19	18	17	16	15	14	13	12	11	10	9	8	7	6	5	4	3	2	1	0
Id																															A	A	A	A	A
Reset 0x00000000				**0**	**0**	**0**	**0**	**0**	**0**	**0**	**0**	**0**	**0**	**0**	**0**	**0**	**0**	**0**	**0**	**0**	**0**	**0**	**0**	**0**	**0**	**0**	**0**	**0**	**0**	**0**	**0**	**0**	**0**	**0**	**0**
Id	**RW**	**Field**	**Value Id**	**Value**								**Description**																							
A	RW	PSELP										Analog positive input channel																							
			NC	0								Not connected																							
			AnalogInput0	1								AIN0																							
			AnalogInput1	2								AIN1																							
			AnalogInput2	3								AIN2																							
			AnalogInput3	4								AIN3																							
			AnalogInput4	5								AIN4																							
			AnalogInput5	6								AIN5																							
			AnalogInput6	7								AIN6																							
			AnalogInput7	8								AIN7																							
			VDD	9								VDD																							

37.11.23 CH[4].PSELN

Address offset: 0x554

Input negative pin selection for CH[4]

Bit number				31	30	29	28	27	26	25	24	23	22	21	20	19	18	17	16	15	14	13	12	11	10	9	8	7	6	5	4	3	2	1	0
Id																															A	A	A	A	A
Reset 0x00000000				**0**	**0**	**0**	**0**	**0**	**0**	**0**	**0**	**0**	**0**	**0**	**0**	**0**	**0**	**0**	**0**	**0**	**0**	**0**	**0**	**0**	**0**	**0**	**0**	**0**	**0**	**0**	**0**	**0**	**0**	**0**	**0**
Id	**RW**	**Field**	**Value Id**	**Value**								**Description**																							
A	RW	PSELN										Analog negative input, enables differential channel																							
			NC	0								Not connected																							
			AnalogInput0	1								AIN0																							
			AnalogInput1	2								AIN1																							
			AnalogInput2	3								AIN2																							
			AnalogInput3	4								AIN3																							
			AnalogInput4	5								AIN4																							
			AnalogInput5	6								AIN5																							
			AnalogInput6	7								AIN6																							
			AnalogInput7	8								AIN7																							
			VDD	9								VDD																							

37.11.24 CH[4].CONFIG

Address offset: 0x558

Input configuration for CH[4]

Bit number				31	30	29	28	27	26	25	24	23	22	21	20	19	18	17	16	15	14	13	12	11	10	9	8	7	6	5	4	3	2	1	0
Id											G				F		E	E	E				D		C	C	C			B	B			A	A
Reset 0x00020000				**0**	**0**	**0**	**0**	**0**	**0**	**0**	**0**	**0**	**0**	**0**	**0**	**0**	**0**	**1**	**0**	**0**	**0**	**0**	**0**	**0**	**0**	**0**	**0**	**0**	**0**	**0**	**0**	**0**	**0**	**0**	**0**
Id	**RW**	**Field**	**Value Id**	**Value**								**Description**																							
A	RW	RESP										Positive channel resistor control																							
			Bypass	0								Bypass resistor ladder																							
			Pulldown	1								Pull-down to GND																							
			Pullup	2								Pull-up to VDD																							
			VDD1_2	3								Set input at VDD/2																							
B	RW	RESN										Negative channel resistor control																							
			Bypass	0								Bypass resistor ladder																							
			Pulldown	1								Pull-down to GND																							
			Pullup	2								Pull-up to VDD																							
			VDD1_2	3								Set input at VDD/2																							
C	RW	GAIN										Gain control																							
			Gain1_6	0								1/6																							
			Gain1_5	1								1/5																							

Bit number				31	30	29	28	27	26	25	24	23	22	21	20	19	18	17	16	15	14	13	12	11	10	9	8	7	6	5	4	3	2	1	0
Id											G				F		E	E	E				D		C	C	C			B	B			A	A
Reset 0x00020000				**0**	**0**	**0**	**0**	**0**	**0**	**0**	**0**	**0**	**0**	**0**	**0**	**0**	**0**	**1**	**0**	**0**	**0**	**0**	**0**	**0**	**0**	**0**	**0**	**0**	**0**	**0**	**0**	**0**	**0**	**0**	**0**
Id	**RW**	**Field**	**Value Id**	**Value**								**Description**																							
			Gain1_4	2								1/4																							
			Gain1_3	3								1/3																							
			Gain1_2	4								1/2																							
			Gain1	5								1																							
			Gain2	6								2																							
			Gain4	7								4																							
D	RW	REFSEL										Reference control																							
			Internal	0								Internal reference (0.6 V)																							
			VDD1_4	1								VDD/4 as reference																							
E	RW	TACQ										Acquisition time, the time the ADC uses to sample the input voltage																							
			3us	0								3 us																							
			5us	1								5 us																							
			10us	2								10 us																							
			15us	3								15 us																							
			20us	4								20 us																							
			40us	5								40 us																							
F	RW	MODE										Enable differential mode																							
			SE	0								Single ended, PSELN will be ignored, negative input to ADC shorted to GND																							
			Diff	1								Differential																							
G	RW	BURST										Enable burst mode																							
			Disabled	0								Burst mode is disabled (normal operation)																							
			Enabled	1								Burst mode is enabled. SAADC takes 2^OVERSAMPLE number of samples as fast as it can, and sends the average to Data RAM.																							

37.11.25 CH[4].LIMIT

Address offset: 0x55C

High/low limits for event monitoring a channel

Bit number				31	30	29	28	27	26	25	24	23	22	21	20	19	18	17	16	15	14	13	12	11	10	9	8	7	6	5	4	3	2	1	0
Id				B	B	B	B	B	B	B	B	B	B	B	B	B	B	B	B	A	A	A	A	A	A	A	A	A	A	A	A	A	A	A	A
Reset 0x7FFF8000				**0**	**1**	**1**	**1**	**1**	**1**	**1**	**1**	**1**	**1**	**1**	**1**	**1**	**1**	**1**	**1**	**1**	**0**	**0**	**0**	**0**	**0**	**0**	**0**	**0**	**0**	**0**	**0**	**0**	**0**	**0**	**0**
Id	**RW**	**Field**	**Value Id**	**Value**								**Description**																							
A	RW	LOW		[-32768 to +32767]								Low level limit																							
B	RW	HIGH		[-32768 to +32767]								High level limit																							

37.11.26 CH[5].PSELP

Address offset: 0x560

Input positive pin selection for CH[5]

Bit number				31	30	29	28	27	26	25	24	23	22	21	20	19	18	17	16	15	14	13	12	11	10	9	8	7	6	5	4	3	2	1	0
Id																															A	A	A	A	A
Reset 0x00000000				**0**	**0**	**0**	**0**	**0**	**0**	**0**	**0**	**0**	**0**	**0**	**0**	**0**	**0**	**0**	**0**	**0**	**0**	**0**	**0**	**0**	**0**	**0**	**0**	**0**	**0**	**0**	**0**	**0**	**0**	**0**	**0**
Id	**RW**	**Field**	**Value Id**	**Value**								**Description**																							
A	RW	PSELP										Analog positive input channel																							
			NC	0								Not connected																							
			AnalogInput0	1								AIN0																							
			AnalogInput1	2								AIN1																							
			AnalogInput2	3								AIN2																							
			AnalogInput3	4								AIN3																							
			AnalogInput4	5								AIN4																							
			AnalogInput5	6								AIN5																							

Bit number				31	30	29	28	27	26	25	24	23	22	21	20	19	18	17	16	15	14	13	12	11	10	9	8	7	6	5	4	3	2	1	0
Id																															A	A	A	A	A
Reset 0x00000000				**0**	**0**	**0**	**0**	**0**	**0**	**0**	**0**	**0**	**0**	**0**	**0**	**0**	**0**	**0**	**0**	**0**	**0**	**0**	**0**	**0**	**0**	**0**	**0**	**0**	**0**	**0**	**0**	**0**	**0**	**0**	**0**
Id	**RW**	**Field**	**Value Id**	**Value**								**Description**																							
			AnalogInput6	7								AIN6																							
			AnalogInput7	8								AIN7																							
			VDD	9								VDD																							

37.11.27 CH[5].PSELN

Address offset: 0x564

Input negative pin selection for CH[5]

Bit number				31	30	29	28	27	26	25	24	23	22	21	20	19	18	17	16	15	14	13	12	11	10	9	8	7	6	5	4	3	2	1	0
Id																															A	A	A	A	A
Reset 0x00000000				**0**	**0**	**0**	**0**	**0**	**0**	**0**	**0**	**0**	**0**	**0**	**0**	**0**	**0**	**0**	**0**	**0**	**0**	**0**	**0**	**0**	**0**	**0**	**0**	**0**	**0**	**0**	**0**	**0**	**0**	**0**	**0**
Id	**RW**	**Field**	**Value Id**	**Value**								**Description**																							
A	RW	PSELN										Analog negative input, enables differential channel																							
			NC	0								Not connected																							
			AnalogInput0	1								AIN0																							
			AnalogInput1	2								AIN1																							
			AnalogInput2	3								AIN2																							
			AnalogInput3	4								AIN3																							
			AnalogInput4	5								AIN4																							
			AnalogInput5	6								AIN5																							
			AnalogInput6	7								AIN6																							
			AnalogInput7	8								AIN7																							
			VDD	9								VDD																							

37.11.28 CH[5].CONFIG

Address offset: 0x568

Input configuration for CH[5]

Bit number				31	30	29	28	27	26	25	24	23	22	21	20	19	18	17	16	15	14	13	12	11	10	9	8	7	6	5	4	3	2	1	0
Id											G				F		E	E	E				D		C	C	C			B	B			A	A
Reset 0x00020000				**0**	**0**	**0**	**0**	**0**	**0**	**0**	**0**	**0**	**0**	**0**	**0**	**0**	**0**	**1**	**0**	**0**	**0**	**0**	**0**	**0**	**0**	**0**	**0**	**0**	**0**	**0**	**0**	**0**	**0**	**0**	**0**
Id	**RW**	**Field**	**Value Id**	**Value**								**Description**																							
A	RW	RESP										Positive channel resistor control																							
			Bypass	0								Bypass resistor ladder																							
			Pulldown	1								Pull-down to GND																							
			Pullup	2								Pull-up to VDD																							
			VDD1_2	3								Set input at VDD/2																							
B	RW	RESN										Negative channel resistor control																							
			Bypass	0								Bypass resistor ladder																							
			Pulldown	1								Pull-down to GND																							
			Pullup	2								Pull-up to VDD																							
			VDD1_2	3								Set input at VDD/2																							
C	RW	GAIN										Gain control																							
			Gain1_6	0								1/6																							
			Gain1_5	1								1/5																							
			Gain1_4	2								1/4																							
			Gain1_3	3								1/3																							
			Gain1_2	4								1/2																							
			Gain1	5								1																							
			Gain2	6								2																							
			Gain4	7								4																							
D	RW	REFSEL										Reference control																							
			Internal	0								Internal reference (0.6 V)																							

Bit number				31	30	29	28	27	26	25	24	23	22	21	20	19	18	17	16	15	14	13	12	11	10	9	8	7	6	5	4	3	2	1	0
Id											G				F		E	E	E				D		C	C	C			B	B			A	A
Reset 0x00020000				**0**	**0**	**0**	**0**	**0**	**0**	**0**	**0**	**0**	**0**	**0**	**0**	**0**	**0**	**1**	**0**	**0**	**0**	**0**	**0**	**0**	**0**	**0**	**0**	**0**	**0**	**0**	**0**	**0**	**0**	**0**	**0**
Id	**RW**	**Field**	**Value Id**	**Value**							**Description**																								
			VDD1_4	1							VDD/4 as reference																								
E	RW	TACQ									Acquisition time, the time the ADC uses to sample the input voltage																								
			3us	0							3 us																								
			5us	1							5 us																								
			10us	2							10 us																								
			15us	3							15 us																								
			20us	4							20 us																								
			40us	5							40 us																								
F	RW	MODE									Enable differential mode																								
			SE	0							Single ended, PSELN will be ignored, negative input to ADC shorted to GND																								
			Diff	1							Differential																								
G	RW	BURST									Enable burst mode																								
			Disabled	0							Burst mode is disabled (normal operation)																								
			Enabled	1							Burst mode is enabled. SAADC takes 2^OVERSAMPLE number of samples as fast as it can, and sends the average to Data RAM.																								

37.11.29 CH[5].LIMIT

Address offset: 0x56C

High/low limits for event monitoring a channel

Bit number				31	30	29	28	27	26	25	24	23	22	21	20	19	18	17	16	15	14	13	12	11	10	9	8	7	6	5	4	3	2	1	0
Id				B	B	B	B	B	B	B	B	B	B	B	B	B	B	B	B	A	A	A	A	A	A	A	A	A	A	A	A	A	A	A	A
Reset 0x7FFF8000				**0**	**1**	**1**	**1**	**1**	**1**	**1**	**1**	**1**	**1**	**1**	**1**	**1**	**1**	**1**	**1**	**1**	**0**	**0**	**0**	**0**	**0**	**0**	**0**	**0**	**0**	**0**	**0**	**0**	**0**	**0**	**0**
Id	**RW**	**Field**	**Value Id**	**Value**							**Description**																								
A	RW	LOW		[-32768 to +32767]							Low level limit																								
B	RW	HIGH		[-32768 to +32767]							High level limit																								

37.11.30 CH[6].PSELP

Address offset: 0x570

Input positive pin selection for CH[6]

Bit number				31	30	29	28	27	26	25	24	23	22	21	20	19	18	17	16	15	14	13	12	11	10	9	8	7	6	5	4	3	2	1	0
Id																															A	A	A	A	A
Reset 0x00000000				**0**	**0**	**0**	**0**	**0**	**0**	**0**	**0**	**0**	**0**	**0**	**0**	**0**	**0**	**0**	**0**	**0**	**0**	**0**	**0**	**0**	**0**	**0**	**0**	**0**	**0**	**0**	**0**	**0**	**0**	**0**	**0**
Id	**RW**	**Field**	**Value Id**	**Value**							**Description**																								
A	RW	PSELP									Analog positive input channel																								
			NC	0							Not connected																								
			AnalogInput0	1							AIN0																								
			AnalogInput1	2							AIN1																								
			AnalogInput2	3							AIN2																								
			AnalogInput3	4							AIN3																								
			AnalogInput4	5							AIN4																								
			AnalogInput5	6							AIN5																								
			AnalogInput6	7							AIN6																								
			AnalogInput7	8							AIN7																								
			VDD	9							VDD																								

37.11.31 CH[6].PSELN

Address offset: 0x574

Input negative pin selection for CH[6]

Bit number				31	30	29	28	27	26	25	24	23	22	21	20	19	18	17	16	15	14	13	12	11	10	9	8	7	6	5	4	3	2	1	0
Id																															A	A	A	A	A
Reset 0x00000000				**0**	**0**	**0**	**0**	**0**	**0**	**0**	**0**	**0**	**0**	**0**	**0**	**0**	**0**	**0**	**0**	**0**	**0**	**0**	**0**	**0**	**0**	**0**	**0**	**0**	**0**	**0**	**0**	**0**	**0**	**0**	**0**
Id	**RW**	**Field**	**Value Id**	**Value**																															**Description**
A	RW	PSELN																																	Analog negative input, enables differential channel
			NC	0																															Not connected
			AnalogInput0	1																															AIN0
			AnalogInput1	2																															AIN1
			AnalogInput2	3																															AIN2
			AnalogInput3	4																															AIN3
			AnalogInput4	5																															AIN4
			AnalogInput5	6																															AIN5
			AnalogInput6	7																															AIN6
			AnalogInput7	8																															AIN7
			VDD	9																															VDD

37.11.32 CH[6].CONFIG

Address offset: 0x578

Input configuration for CH[6]

Bit number				31	30	29	28	27	26	25	24	23	22	21	20	19	18	17	16	15	14	13	12	11	10	9	8	7	6	5	4	3	2	1	0
Id											G				F		E	E	E				D		C	C	C			B	B			A	A
Reset 0x00020000				**0**	**0**	**0**	**0**	**0**	**0**	**0**	**0**	**0**	**0**	**0**	**0**	**0**	**0**	**1**	**0**	**0**	**0**	**0**	**0**	**0**	**0**	**0**	**0**	**0**	**0**	**0**	**0**	**0**	**0**	**0**	**0**
Id	**RW**	**Field**	**Value Id**	**Value**																															**Description**
A	RW	RESP																																	Positive channel resistor control
			Bypass	0																															Bypass resistor ladder
			Pulldown	1																															Pull-down to GND
			Pullup	2																															Pull-up to VDD
			VDD1_2	3																															Set input at VDD/2
B	RW	RESN																																	Negative channel resistor control
			Bypass	0																															Bypass resistor ladder
			Pulldown	1																															Pull-down to GND
			Pullup	2																															Pull-up to VDD
			VDD1_2	3																															Set input at VDD/2
C	RW	GAIN																																	Gain control
			Gain1_6	0																															1/6
			Gain1_5	1																															1/5
			Gain1_4	2																															1/4
			Gain1_3	3																															1/3
			Gain1_2	4																															1/2
			Gain1	5																															1
			Gain2	6																															2
			Gain4	7																															4
D	RW	REFSEL																																	Reference control
			Internal	0																															Internal reference (0.6 V)
			VDD1_4	1																															VDD/4 as reference
E	RW	TACQ																																	Acquisition time, the time the ADC uses to sample the input voltage
			3us	0																															3 us
			5us	1																															5 us
			10us	2																															10 us
			15us	3																															15 us
			20us	4																															20 us
			40us	5																															40 us
F	RW	MODE																																	Enable differential mode
			SE	0																															Single ended, PSELN will be ignored, negative input to ADC shorted to GND
			Diff	1																															Differential

Bit number				31	30	29	28	27	26	25	24	23	22	21	20	19	18	17	16	15	14	13	12	11	10	9	8	7	6	5	4	3	2	1	0
Id											G				F		E	E	E				D		C	C	C			B	B			A	A
Reset 0x00020000				**0**	**0**	**0**	**0**	**0**	**0**	**0**	**0**	**0**	**0**	**0**	**0**	**0**	**0**	**1**	**0**	**0**	**0**	**0**	**0**	**0**	**0**	**0**	**0**	**0**	**0**	**0**	**0**	**0**	**0**	**0**	**0**
Id	**RW**	**Field**	**Value Id**	**Value**							**Description**																								
G	RW	BURST									Enable burst mode																								
			Disabled	0							Burst mode is disabled (normal operation)																								
			Enabled	1							Burst mode is enabled. SAADC takes 2^OVERSAMPLE number of samples as fast as it can, and sends the average to Data RAM.																								

37.11.33 CH[6].LIMIT

Address offset: 0x57C

High/low limits for event monitoring a channel

Bit number				31	30	29	28	27	26	25	24	23	22	21	20	19	18	17	16	15	14	13	12	11	10	9	8	7	6	5	4	3	2	1	0
Id				B	B	B	B	B	B	B	B	B	B	B	B	B	B	B	B	A	A	A	A	A	A	A	A	A	A	A	A	A	A	A	A
Reset 0x7FFF8000				**0**	**1**	**1**	**1**	**1**	**1**	**1**	**1**	**1**	**1**	**1**	**1**	**1**	**1**	**1**	**1**	**1**	**0**	**0**	**0**	**0**	**0**	**0**	**0**	**0**	**0**	**0**	**0**	**0**	**0**	**0**	**0**
Id	**RW**	**Field**	**Value Id**	**Value**							**Description**																								
A	RW	LOW		[-32768 to +32767]							Low level limit																								
B	RW	HIGH		[-32768 to +32767]							High level limit																								

37.11.34 CH[7].PSELP

Address offset: 0x580

Input positive pin selection for CH[7]

Bit number				31	30	29	28	27	26	25	24	23	22	21	20	19	18	17	16	15	14	13	12	11	10	9	8	7	6	5	4	3	2	1	0
Id																															A	A	A	A	A
Reset 0x00000000				**0**	**0**	**0**	**0**	**0**	**0**	**0**	**0**	**0**	**0**	**0**	**0**	**0**	**0**	**0**	**0**	**0**	**0**	**0**	**0**	**0**	**0**	**0**	**0**	**0**	**0**	**0**	**0**	**0**	**0**	**0**	**0**
Id	**RW**	**Field**	**Value Id**	**Value**							**Description**																								
A	RW	PSELP									Analog positive input channel																								
			NC	0							Not connected																								
			AnalogInput0	1							AIN0																								
			AnalogInput1	2							AIN1																								
			AnalogInput2	3							AIN2																								
			AnalogInput3	4							AIN3																								
			AnalogInput4	5							AIN4																								
			AnalogInput5	6							AIN5																								
			AnalogInput6	7							AIN6																								
			AnalogInput7	8							AIN7																								
			VDD	9							VDD																								

37.11.35 CH[7].PSELN

Address offset: 0x584

Input negative pin selection for CH[7]

Bit number				31	30	29	28	27	26	25	24	23	22	21	20	19	18	17	16	15	14	13	12	11	10	9	8	7	6	5	4	3	2	1	0
Id																															A	A	A	A	A
Reset 0x00000000				**0**	**0**	**0**	**0**	**0**	**0**	**0**	**0**	**0**	**0**	**0**	**0**	**0**	**0**	**0**	**0**	**0**	**0**	**0**	**0**	**0**	**0**	**0**	**0**	**0**	**0**	**0**	**0**	**0**	**0**	**0**	**0**
Id	**RW**	**Field**	**Value Id**	**Value**							**Description**																								
A	RW	PSELN									Analog negative input, enables differential channel																								
			NC	0							Not connected																								
			AnalogInput0	1							AIN0																								
			AnalogInput1	2							AIN1																								
			AnalogInput2	3							AIN2																								
			AnalogInput3	4							AIN3																								
			AnalogInput4	5							AIN4																								
			AnalogInput5	6							AIN5																								

Bit number				31	30	29	28	27	26	25	24	23	22	21	20	19	18	17	16	15	14	13	12	11	10	9	8	7	6	5	4	3	2	1	0
Id																															A	A	A	A	A
Reset 0x00000000				**0**	**0**	**0**	**0**	**0**	**0**	**0**	**0**	**0**	**0**	**0**	**0**	**0**	**0**	**0**	**0**	**0**	**0**	**0**	**0**	**0**	**0**	**0**	**0**	**0**	**0**	**0**	**0**	**0**	**0**	**0**	**0**
Id	**RW**	**Field**	**Value Id**	**Value**								**Description**																							
			AnalogInput6	7								AIN6																							
			AnalogInput7	8								AIN7																							
			VDD	9								VDD																							

37.11.36 CH[7].CONFIG

Address offset: 0x588

Input configuration for CH[7]

Bit number				31	30	29	28	27	26	25	24	23	22	21	20	19	18	17	16	15	14	13	12	11	10	9	8	7	6	5	4	3	2	1	0
Id											G				F		E	E	E				D		C	C	C			B	B			A	A
Reset 0x00020000				**0**	**0**	**0**	**0**	**0**	**0**	**0**	**0**	**0**	**0**	**0**	**0**	**0**	**0**	**1**	**0**	**0**	**0**	**0**	**0**	**0**	**0**	**0**	**0**	**0**	**0**	**0**	**0**	**0**	**0**	**0**	**0**
Id	**RW**	**Field**	**Value Id**	**Value**								**Description**																							
A	RW	RESP										Positive channel resistor control																							
			Bypass	0								Bypass resistor ladder																							
			Pulldown	1								Pull-down to GND																							
			Pullup	2								Pull-up to VDD																							
			VDD1_2	3								Set input at VDD/2																							
B	RW	RESN										Negative channel resistor control																							
			Bypass	0								Bypass resistor ladder																							
			Pulldown	1								Pull-down to GND																							
			Pullup	2								Pull-up to VDD																							
			VDD1_2	3								Set input at VDD/2																							
C	RW	GAIN										Gain control																							
			Gain1_6	0								1/6																							
			Gain1_5	1								1/5																							
			Gain1_4	2								1/4																							
			Gain1_3	3								1/3																							
			Gain1_2	4								1/2																							
			Gain1	5								1																							
			Gain2	6								2																							
			Gain4	7								4																							
D	RW	REFSEL										Reference control																							
			Internal	0								Internal reference (0.6 V)																							
			VDD1_4	1								VDD/4 as reference																							
E	RW	TACQ										Acquisition time, the time the ADC uses to sample the input voltage																							
			3us	0								3 us																							
			5us	1								5 us																							
			10us	2								10 us																							
			15us	3								15 us																							
			20us	4								20 us																							
			40us	5								40 us																							
F	RW	MODE										Enable differential mode																							
			SE	0								Single ended, PSELN will be ignored, negative input to ADC shorted to GND																							
			Diff	1								Differential																							
G	RW	BURST										Enable burst mode																							
			Disabled	0								Burst mode is disabled (normal operation)																							
			Enabled	1								Burst mode is enabled. SAADC takes 2^OVERSAMPLE number of samples as fast as it can, and sends the average to Data RAM.																							

37.11.37 CH[7].LIMIT

Address offset: 0x58C

High/low limits for event monitoring a channel

Bit number				31	30	29	28	27	26	25	24	23	22	21	20	19	18	17	16	15	14	13	12	11	10	9	8	7	6	5	4	3	2	1	0
Id				B	B	B	B	B	B	B	B	B	B	B	B	B	B	B	B	A	A	A	A	A	A	A	A	A	A	A	A	A	A	A	A
Reset 0x7FFF8000				**0**	**1**	**1**	**1**	**1**	**1**	**1**	**1**	**1**	**1**	**1**	**1**	**1**	**1**	**1**	**1**	**1**	**0**	**0**	**0**	**0**	**0**	**0**	**0**	**0**	**0**	**0**	**0**	**0**	**0**	**0**	**0**
Id	**RW**	**Field**	**Value Id**	**Value**																															
A	RW	LOW		[-32768 to +32767]																															
B	RW	HIGH		[-32768 to +32767]																															

37.11.38 RESOLUTION

Address offset: 0x5F0

Resolution configuration

Bit number				31	30	29	28	27	26	25	24	23	22	21	20	19	18	17	16	15	14	13	12	11	10	9	8	7	6	5	4	3	2	1	0
Id																																	A	A	A
Reset 0x00000001				**0**	**0**	**0**	**0**	**0**	**0**	**0**	**0**	**0**	**0**	**0**	**0**	**0**	**0**	**0**	**0**	**0**	**0**	**0**	**0**	**0**	**0**	**0**	**0**	**0**	**0**	**0**	**0**	**0**	**0**	**0**	**1**
Id	**RW**	**Field**	**Value Id**	**Value**																															
A	RW	VAL																																	
			8bit	0																															
			10bit	1																															
			12bit	2																															
			14bit	3																															

37.11.39 OVERSAMPLE

Address offset: 0x5F4

Oversampling configuration. OVERSAMPLE should not be combined with SCAN. The RESOLUTION is applied before averaging, thus for high OVERSAMPLE a higher RESOLUTION should be used.

Bit number				31	30	29	28	27	26	25	24	23	22	21	20	19	18	17	16	15	14	13	12	11	10	9	8	7	6	5	4	3	2	1	0
Id																																A	A	A	A
Reset 0x00000000				**0**	**0**	**0**	**0**	**0**	**0**	**0**	**0**	**0**	**0**	**0**	**0**	**0**	**0**	**0**	**0**	**0**	**0**	**0**	**0**	**0**	**0**	**0**	**0**	**0**	**0**	**0**	**0**	**0**	**0**	**0**	**0**
Id	**RW**	**Field**	**Value Id**	**Value**																															
A	RW	OVERSAMPLE																																	
			Bypass	0																															
			Over2x	1																															
			Over4x	2																															
			Over8x	3																															
			Over16x	4																															
			Over32x	5																															
			Over64x	6																															
			Over128x	7																															
			Over256x	8																															

37.11.40 SAMPLERATE

Address offset: 0x5F8

Controls normal or continuous sample rate

Bit number				31	30	29	28	27	26	25	24	23	22	21	20	19	18	17	16	15	14	13	12	11	10	9	8	7	6	5	4	3	2	1	0
Id																							B		A	A	A	A	A	A	A	A	A	A	A
Reset 0x00000000				**0**	**0**	**0**	**0**	**0**	**0**	**0**	**0**	**0**	**0**	**0**	**0**	**0**	**0**	**0**	**0**	**0**	**0**	**0**	**0**	**0**	**0**	**0**	**0**	**0**	**0**	**0**	**0**	**0**	**0**	**0**	**0**
Id	**RW**	**Field**	**Value Id**	**Value**																															
A	RW	CC		[80..2047]																															
B	RW	MODE																																	
			Task	0																															
			Timers	1																															

37.11.41 RESULT.PTR

Address offset: 0x62C

Data pointer

Bit number	31	30	29	28	27	26	25	24	23	22	21	20	19	18	17	16	15	14	13	12	11	10	9	8	7	6	5	4	3	2	1	0
Id	A	A	A	A	A	A	A	A	A	A	A	A	A	A	A	A	A	A	A	A	A	A	A	A	A	A	A	A	A	A	A	A
Reset 0x00000000	**0**	**0**	**0**	**0**	**0**	**0**	**0**	**0**	**0**	**0**	**0**	**0**	**0**	**0**	**0**	**0**	**0**	**0**	**0**	**0**	**0**	**0**	**0**	**0**	**0**	**0**	**0**	**0**	**0**	**0**	**0**	**0**

Id	RW	Field	Value Id	Value	Description
A	RW	PTR			Data pointer

37.11.42 RESULT.MAXCNT

Address offset: 0x630

Maximum number of buffer words to transfer

Bit number	31	30	29	28	27	26	25	24	23	22	21	20	19	18	17	16	15	14	13	12	11	10	9	8	7	6	5	4	3	2	1	0
Id																		A	A	A	A	A	A	A	A	A	A	A	A	A	A	A
Reset 0x00000000	**0**	**0**	**0**	**0**	**0**	**0**	**0**	**0**	**0**	**0**	**0**	**0**	**0**	**0**	**0**	**0**	**0**	**0**	**0**	**0**	**0**	**0**	**0**	**0**	**0**	**0**	**0**	**0**	**0**	**0**	**0**	**0**

Id	RW	Field	Value Id	Value	Description
A	RW	MAXCNT			Maximum number of buffer words to transfer

37.11.43 RESULT.AMOUNT

Address offset: 0x634

Number of buffer words transferred since last START

Bit number	31	30	29	28	27	26	25	24	23	22	21	20	19	18	17	16	15	14	13	12	11	10	9	8	7	6	5	4	3	2	1	0
Id																		A	A	A	A	A	A	A	A	A	A	A	A	A	A	A
Reset 0x00000000	**0**	**0**	**0**	**0**	**0**	**0**	**0**	**0**	**0**	**0**	**0**	**0**	**0**	**0**	**0**	**0**	**0**	**0**	**0**	**0**	**0**	**0**	**0**	**0**	**0**	**0**	**0**	**0**	**0**	**0**	**0**	**0**

Id	RW	Field	Value Id	Value	Description
A	R	AMOUNT			Number of buffer words transferred since last START. This register can be read after an END or STOPPED event.

37.12 Electrical Specification

37.12.1 SAADC Electrical Specification

Symbol	Description	Min.	Typ.	Max.	Units
DNL	Differential non-linearity, 10-bit resolution	-0.95	<1		LSB
INL	Integral non-linearity, 10-bit resolution		1		LSB
V_{OS}	Differential offset error (calibrated), 10-bit resolution [a]		+-2		LSB
C_{EG}	Gain error temperature coefficient		0.02		%/°C
f_{SAMPLE}	Maximum sampling rate			200	kHz
$t_{ACQ,10k}$	Acquisition time (configurable), source Resistance <= 10kOhm		3		µs
$t_{ACQ,40k}$	Acquisition time (configurable), source Resistance <= 40kOhm		5		µs
$t_{ACQ,100k}$	Acquisition time (configurable), source Resistance <= 100kOhm		10		µs
$t_{ACQ,200k}$	Acquisition time (configurable), source Resistance <= 200kOhm		15		µs
$t_{ACQ,400k}$	Acquisition time (configurable), source Resistance <= 400kOhm		20		µs
$t_{ACQ,800k}$	Acquisition time (configurable), source Resistance <= 800kOhm		40		µs
t_{CONV}	Conversion time		<2		µs
$I_{ADC,CONV}$	ADC current during ACQuisition and CONVersion		700		µA
$I_{ADC,IDLE}$	Idle current, when not sampling, excluding clock sources and regulator base currents[32]		<5		µA

[a] Digital output code at zero volt differential input.

[32] When t_{ACQ} is 10us or longer, and if DC/DC is active, it will be allowed to work in refresh mode if no other resource is requiring a high quality power supply from 1V3. If t_{ACQ} is smaller than 10us and DC/DC is active,

Symbol	Description	Min.	Typ.	Max.	Units
$E_{G1/6}$	Error[b] for Gain = 1/6	-3		3	%
$E_{G1/4}$	Error[b] for Gain = 1/4	-3		3	%
$E_{G1/2}$	Error[b] for Gain = 1/2	-3		4	%
E_{G1}	Error[b] for Gain = 1	-3		4	%
C_{SAMPLE}	Sample and hold capacitance at maximum gain[33]		2.5		pF
R_{INPUT}	Input resistance		>1		MΩ
E_{NOB}	Effective number of bits, differential mode, 12-bit resolution, 1/1 gain, 3 µs acquisition time, crystal HFCLK, 200 ksps		9		Bit
S_{NDR}	Peak signal to noise and distortion ratio, differential mode, 12-bit resolution, 1/1 gain, 3 µs acquisition time, crystal HFCLK, 200 ksps		56		dB
S_{FDR}	Spurious free dynamic range, differential mode, 12-bit resolution, 1/1 gain, 3 µs acquisition time, crystal HFCLK, 200 ksps		70		dBc
R_{LADDER}	Ladder resistance		160		kΩ

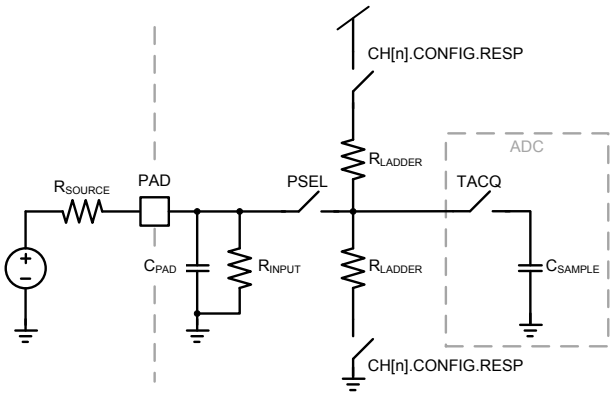

Figure 104: Model of SAADC input (one channel)

Note: SAADC average current calculation for a given application is based on the sample period, conversion and acquisition time (t_{conv} and t_{ACQ}) and conversion and idle current ($I_{ADC,CONV}$ and $I_{ADC,IDLE}$). For example, sampling at 4kHz gives a sample period of 250µs. The average current consumption would then be:

$$I_{AVERAGE} = \left(\frac{(t_{CONV} + t_{ACQ})}{250}\right)(I_{ADC,CONV}) + \left(\frac{250 - (t_{CONV} + t_{ACQ})}{250}\right)(I_{ADC,IDLE})$$

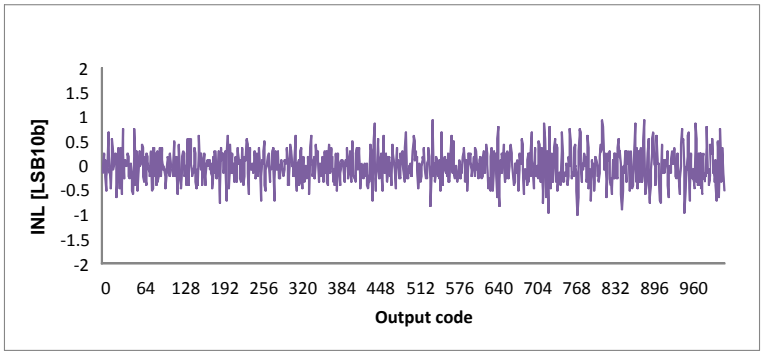

Figure 105: ADC INL vs Output Code

refresh mode will not be allowed, and it will remain in normal mode from the START task to the STOPPED event. So depending on t_{ACQ} and other resources' needs, the appropriate base current needs to be taken into account.

b Does not include temperature drift

33 Maximum gain corresponds to highest capacitance.

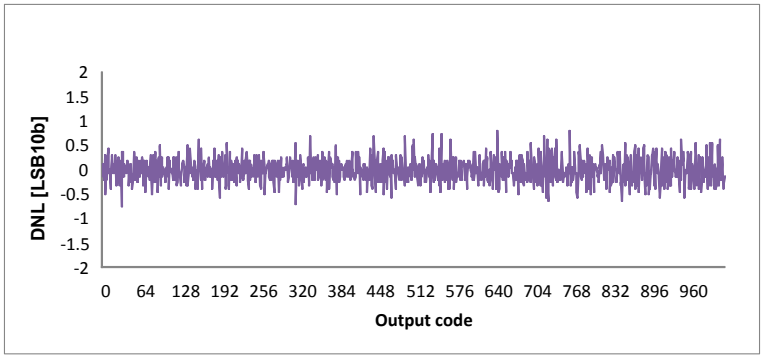

Figure 106: ADC DNL vs Output Code

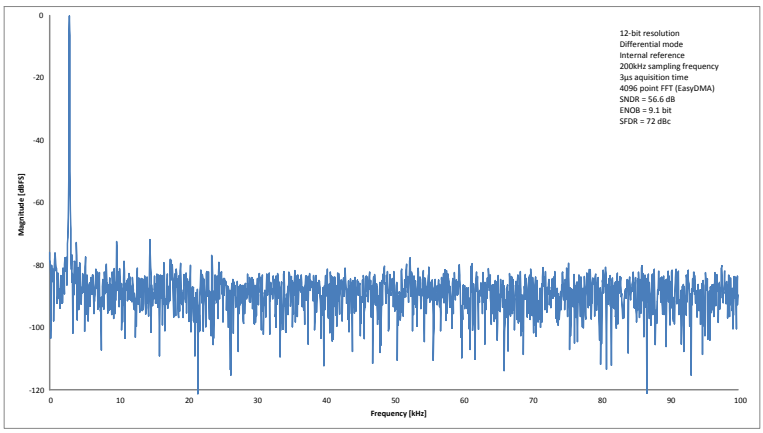

Figure 107: FFT of a 2.8 kHz sine at 200 ksps ()

37.13 Performance factors

Clock jitter, affecting sample timing accuracy, and circuit noise can affect ADC performance.

Jitter can be between START tasks or from START task to acquisition. START timer accuracy and startup times of regulators and references will contribute to variability. Sources of circuit noise may include CPU activity and the DC/DC regulator. Best ADC performance is achieved using START timing based on the TIMER module, HFXO clock source, and Constant Latency mode.

38 COMP — Comparator

The Comparator (COMP) compares the input voltage (VIN+) that is derived from an analog input pin selected via the PSEL register against a second input voltage (VIN-) that can be derived from multiple sources depending on operation mode.

Listed here are the main features for COMP:

- Input range from 0 V to VDD
- Single-ended mode
  - Fully flexible hysteresis using a 64-level reference ladder
- Differential mode
  - Configurable 50 mV hysteresis
- Reference inputs:
  - VDD
  - External reference from AIN0 to AIN1 (between 0 V and VDD)
  - Internal references 1.2 V, 1.8 V and 2.4 V
- Three operation modes: low power, normal and high-speed
- Single-pin capacitive sensor support
- Event generation on output changes
  - UP event on VIN- > VIN+
  - DOWN event on VIN- < VIN+
  - CROSS event on VIN+ and VIN- crossing
  - READY event on core and internal reference (if used) ready

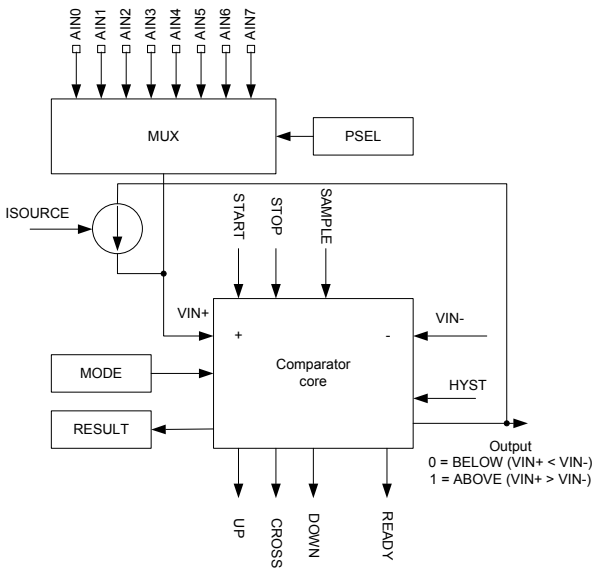

Figure 108: Comparator overview

> **Important:** COMP cannot be used (STARTed) at the same time as LPCOMP. Only one comparator can be used at a time.

The COMP is started by triggering the START task, and stopped by triggering the STOP task. After a start-up time of $t_{COMP,START}$ [34] the COMP will generate a READY event to indicate that the comparator is ready

[34] See $t_{PROPDLY,LP}$, $t_{PROPDLY,N}$, $t_{PROPDLY,HS}$, $I_{COMP,LP}$, $I_{COMP,N}$ and $I_{COMP,HS}$ in *Electrical parameters* for more information about COMP speed and power characteristics related to these different modes.

to use and the output of the COMP is correct. When the COMP module is started, events will be generated every time VIN+ crosses VIN-.

VIN- can be derived directly from AIN0 or AIN1 in differential mode, or VREF in single-ended mode. VUP and VDOWN thresholds can be set to implement a hysteresis on VIN- using the Reference Ladder. VREF can be derived from VDD, AIN0, AIN1 or internal 1.2V, 1.8V and 2.4V references.

An upward crossing will generate an UP event and a downward crossing will generate a DOWN event. The CROSS event will be generated every time there is a crossing, independent of direction.

An optional hysteresis on VIN+ and VIN- can be enabled when the module is used in differential mode through the HYST register. In single ended mode the two reference ladders (VUP and VDOWN, see *Figure 111: Comparator in single-ended mode* on page 390) will be used instead of the hysteresis mechanism configured in HYST.

This hysteresis is in the order of magnitude of 50 mV, and shall prevent noise on the signal to create unwanted events. See *Figure 112: Hysteresis example where VIN+ starts below VUP* on page 390 for illustration of the effect of an active hysteresis on a noisy input signal.

The COMP can be configured to operate in two main operation modes, differential mode and single-ended mode, see MODE register for more information.

The COMP can, for both main operation modes, operate in different speed and power consumption modes, see MODE register. High-speed mode will consume more power compared to low-power mode, and low-power mode will result in slower response time compared to high-speed mode.

The immediate value of the COMP can be sampled to the RESULT register by triggering the SAMPLE task.

A selectable current can be applied (ISOURCE register) on the currently selected AINx line. Enabling the block creates a feedback path around the comparator, forming a relaxation oscillator. The circuit will sink current from VIN+ when the comparator output is high, and source current into VIN+ when the comparator output is low. The frequency of the oscillator is dependent on the capacitance at the analog input pin, the reference voltages and the value of the current source. In this mode, only a capacitive sensor needs to be attached between the analog input pin and ground. With a selected current of 10 µA, VUP-VDOWN equal to 1 V, and an external capacity of typically 10 pF, the resulting oscillation frequency is around 500 kHz.

The frequency of the oscillator can be calculated as

```
f_OSC = I_SOURCE / (2C·(VUP-VDOWN) )
```

38.1 Shared resources

The COMP shares analog resources with the SAADC and LPCOMP peripherals.

While it is possible to use SAADC at the same time as COMP or LPCOMP, COMP and LPCOMP are mutually exclusive: enabling one will automatically disable the other. In addition, when using SAADC and COMP or LPCOMP simultaneously, it is not possible to select the same analog input pin for both modules.

> **Important:** The COMP peripheral shall not be disabled (by writing to the ENABLE register) before the peripheral has stopped. Failing to do so may result in unpredictable behaviour.

38.2 Differential mode

In differential mode, the reference input VIN- is derived directly from one of the AINx pins.

In this mode, the impedance on VIN-'s signal path is equal to the impedance on VIN+'s signal path. See $Z_{COMPVINP}$ and $Z_{COMPVINND}$ for more information. In differential mode, the PSEL, MODE and EXTREFSEL registers must be configured before the COMP is enabled via the ENABLE register. When HYST is turned on while in this mode, the Output of the comparator (and associated events) will change from ABOVE to BELOW whenever VIN+ becomes smaller than (VIN- - ($V_{DIFFHYST}$ / 2)). Similarly, it will change from BELOW to ABOVE whenever VIN+ becomes larger than (VIN- + ($V_{DIFFHYST}$ / 2)), as illustrated in *Figure 110: Hysteresis enabled in differential mode* on page 389.

Restriction: Depending on the device, not all the analog inputs may be available for each MUX.

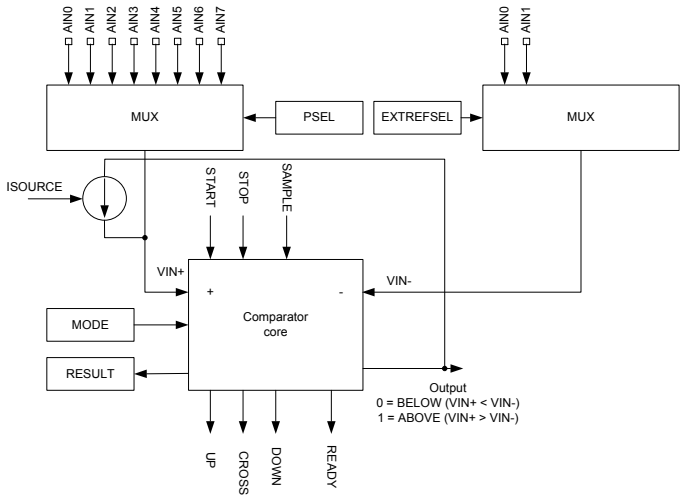

Figure 109: Comparator in differential mode

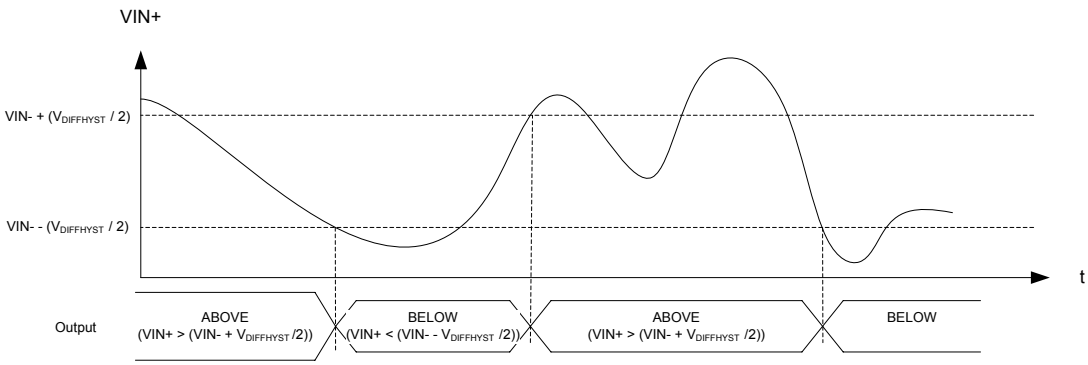

Figure 110: Hysteresis enabled in differential mode

38.3 Single-ended mode

In single-ended mode, VIN- is derived from the Reference Ladder.

The Reference Ladder uses the reference voltage VREF to derive two new voltage references, VUP and VDOWN. VUP and VDOWN are configured via THUP and THDOWN in the TH register. VREF can be sourced from any of the available references sources as illustrated in *Figure 111: Comparator in single-ended mode* on page 390. This is configured via EXTREFSEL and REFSEL.

When the comparator core detects that VIN+ > VIN-, i.e. ABOVE as per the RESULT register, VIN- will switch to VDOWN. When VIN- falls below VIN- again, VIN- will be switched back to VUP. By specifying VUP larger than VDOWN, a hysteresis as illustrated in *Figure 112: Hysteresis example where VIN+ starts below VUP* on page 390 and *Figure 113: Hysteresis example where VIN+ starts above VUP* on page 391 can be generated. In single-ended mode, the PSEL, MODE, EXTREFSEL, REFSEL and TH registers must be configured before the COMP is enabled via the ENABLE register.

Restriction: Depending on the device, not all the analog inputs may be available for each MUX.

Writing to the HYST register has no effect in single-ended mode, and the content of this register is ignored.

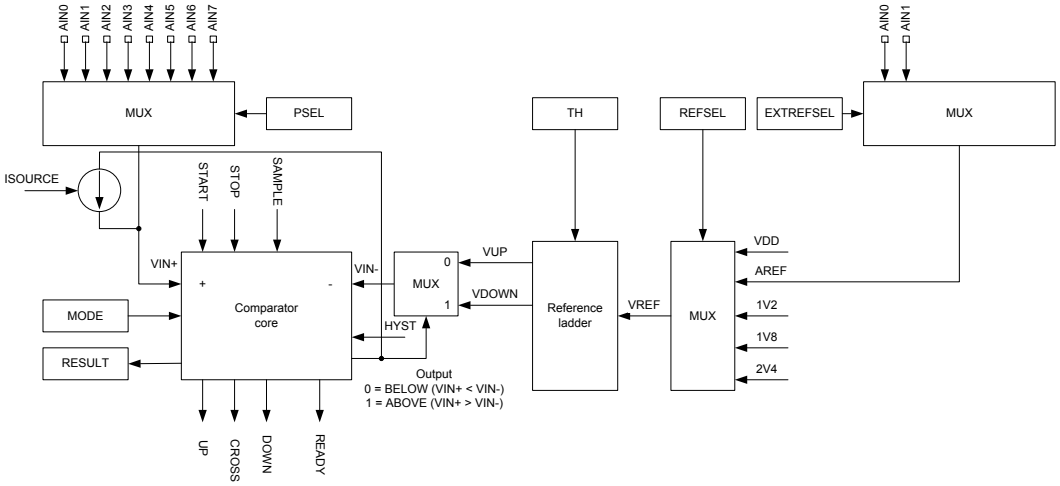

Figure 111: Comparator in single-ended mode

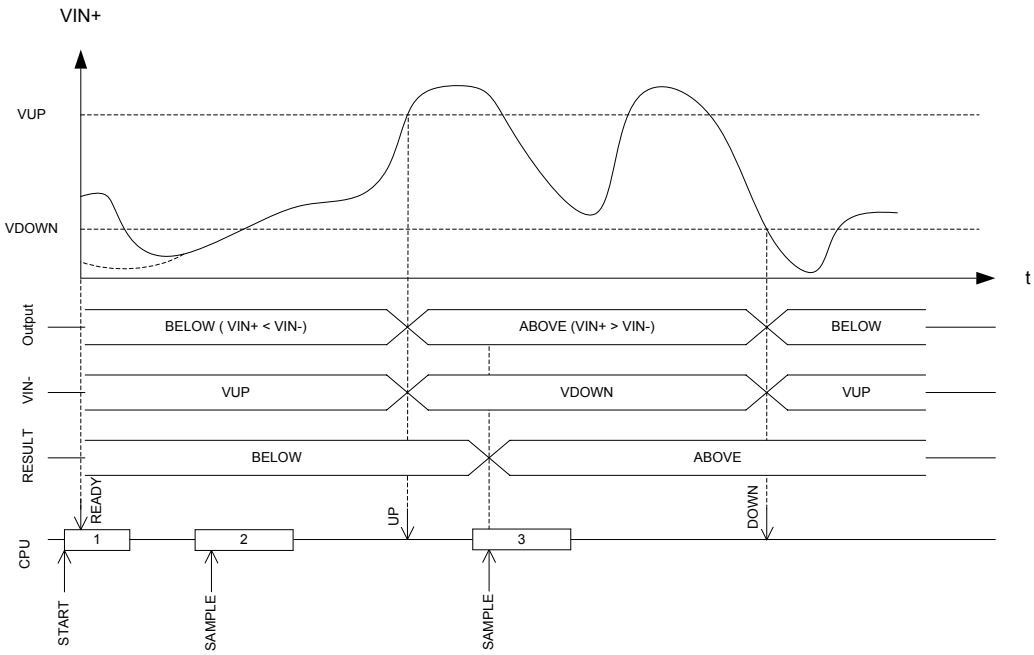

Figure 112: Hysteresis example where VIN+ starts below VUP

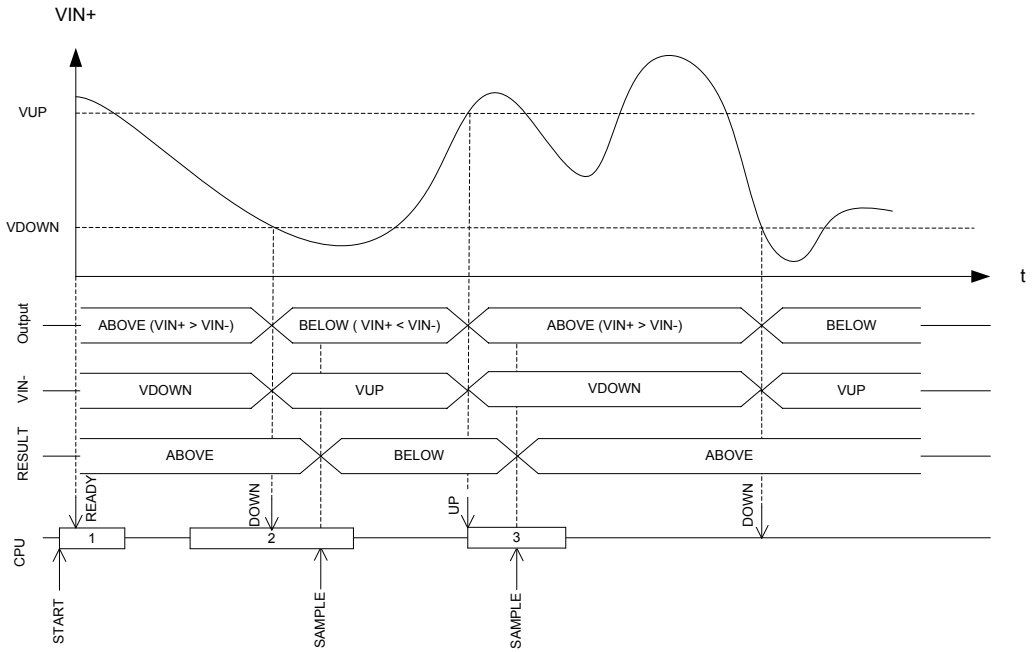

Figure 113: Hysteresis example where VIN+ starts above VUP

38.4 Pin configuration

The user can use the PSEL register to select one of the analog input pins, `AIN0` through `AIN7`, as input VIN +.

See *Figure 111: Comparator in single-ended mode* on page 390. Similarly the user can use the EXTREFSEL register to select one of the AINx analog input pins as reference input, in case AREF is selected in REFSEL. The selected analog pins will be acquired by the COMP when it is enabled via the ENABLE register.

Depending on the device, not all the analog inputs may be available for each MUX. See PSEL and EXTREFSEL register definition for more information about which analog pins are available on a particular device.

38.5 Registers

Table 87: Instances

Base address	Peripheral	Instance	Description	Configuration
0x40013000	COMP	COMP	General Purpose Comparator	

Table 88: Register Overview

Register	Offset	Description
TASKS_START	0x000	Start comparator
TASKS_STOP	0x004	Stop comparator
TASKS_SAMPLE	0x008	Sample comparator value
EVENTS_READY	0x100	COMP is ready and output is valid
EVENTS_DOWN	0x104	Downward crossing
EVENTS_UP	0x108	Upward crossing
EVENTS_CROSS	0x10C	Downward or upward crossing
SHORTS	0x200	Shortcut register
INTEN	0x300	Enable or disable interrupt
INTENSET	0x304	Enable interrupt

Register	Offset	Description
INTENCLR	0x308	Disable interrupt
RESULT	0x400	Compare result
ENABLE	0x500	COMP enable
PSEL	0x504	Pin select
REFSEL	0x508	Reference source select
EXTREFSEL	0x50C	External reference select
TH	0x530	Threshold configuration for hysteresis unit
MODE	0x534	Mode configuration
HYST	0x538	Comparator hysteresis enable
ISOURCE	0x53C	Current source select on analog input

38.5.1 SHORTS

Address offset: 0x200

Shortcut register

Bit number	31	30	29	28	27	26	25	24	23	22	21	20	19	18	17	16	15	14	13	12	11	10	9	8	7	6	5	4	3	2	1	0
Id																												E	D	C	B	A
Reset 0x00000000	**0**	**0**	**0**	**0**	**0**	**0**	**0**	**0**	**0**	**0**	**0**	**0**	**0**	**0**	**0**	**0**	**0**	**0**	**0**	**0**	**0**	**0**	**0**	**0**	**0**	**0**	**0**	**0**	**0**	**0**	**0**	**0**

Id	RW	Field	Value Id	Value	Description
A	RW	READY_SAMPLE			Shortcut between READY event and SAMPLE task
					See *EVENTS_READY* and *TASKS_SAMPLE*
			Disabled	0	Disable shortcut
			Enabled	1	Enable shortcut
B	RW	READY_STOP			Shortcut between READY event and STOP task
					See *EVENTS_READY* and *TASKS_STOP*
			Disabled	0	Disable shortcut
			Enabled	1	Enable shortcut
C	RW	DOWN_STOP			Shortcut between DOWN event and STOP task
					See *EVENTS_DOWN* and *TASKS_STOP*
			Disabled	0	Disable shortcut
			Enabled	1	Enable shortcut
D	RW	UP_STOP			Shortcut between UP event and STOP task
					See *EVENTS_UP* and *TASKS_STOP*
			Disabled	0	Disable shortcut
			Enabled	1	Enable shortcut
E	RW	CROSS_STOP			Shortcut between CROSS event and STOP task
					See *EVENTS_CROSS* and *TASKS_STOP*
			Disabled	0	Disable shortcut
			Enabled	1	Enable shortcut

38.5.2 INTEN

Address offset: 0x300

Enable or disable interrupt

Bit number	31	30	29	28	27	26	25	24	23	22	21	20	19	18	17	16	15	14	13	12	11	10	9	8	7	6	5	4	3	2	1	0
Id																													D	C	B	A
Reset 0x00000000	**0**	**0**	**0**	**0**	**0**	**0**	**0**	**0**	**0**	**0**	**0**	**0**	**0**	**0**	**0**	**0**	**0**	**0**	**0**	**0**	**0**	**0**	**0**	**0**	**0**	**0**	**0**	**0**	**0**	**0**	**0**	**0**

Id	RW	Field	Value Id	Value	Description
A	RW	READY			Enable or disable interrupt for READY event
					See *EVENTS_READY*
			Disabled	0	Disable
			Enabled	1	Enable
B	RW	DOWN			Enable or disable interrupt for DOWN event
					See *EVENTS_DOWN*

Bit number				31	30	29	28	27	26	25	24	23	22	21	20	19	18	17	16	15	14	13	12	11	10	9	8	7	6	5	4	3	2	1	0
Id																																D	C	B	A
Reset 0x00000000				**0**	**0**	**0**	**0**	**0**	**0**	**0**	**0**	**0**	**0**	**0**	**0**	**0**	**0**	**0**	**0**	**0**	**0**	**0**	**0**	**0**	**0**	**0**	**0**	**0**	**0**	**0**	**0**	**0**	**0**	**0**	**0**
Id	**RW**	**Field**	**Value Id**	**Value**																															
			Disabled	0																															
			Enabled	1																															
C	RW	UP																																	
			Disabled	0																															
			Enabled	1																															
D	RW	CROSS																																	
			Disabled	0																															
			Enabled	1																															

Enable or disable interrupt for UP event

See *EVENTS_UP*

Enable or disable interrupt for CROSS event

See *EVENTS_CROSS*

38.5.3 INTENSET

Address offset: 0x304

Enable interrupt

Bit number				31	30	29	28	27	26	25	24	23	22	21	20	19	18	17	16	15	14	13	12	11	10	9	8	7	6	5	4	3	2	1	0
Id																																D	C	B	A
Reset 0x00000000				**0**	**0**	**0**	**0**	**0**	**0**	**0**	**0**	**0**	**0**	**0**	**0**	**0**	**0**	**0**	**0**	**0**	**0**	**0**	**0**	**0**	**0**	**0**	**0**	**0**	**0**	**0**	**0**	**0**	**0**	**0**	**0**
Id	**RW**	**Field**	**Value Id**	**Value**																															
A	RW	READY																																	
			Set	1																															
			Disabled	0																															
			Enabled	1																															
B	RW	DOWN																																	
			Set	1																															
			Disabled	0																															
			Enabled	1																															
C	RW	UP																																	
			Set	1																															
			Disabled	0																															
			Enabled	1																															
D	RW	CROSS																																	
			Set	1																															
			Disabled	0																															
			Enabled	1																															

Write '1' to Enable interrupt for READY event

See *EVENTS_READY*

Write '1' to Enable interrupt for DOWN event

See *EVENTS_DOWN*

Write '1' to Enable interrupt for UP event

See *EVENTS_UP*

Write '1' to Enable interrupt for CROSS event

See *EVENTS_CROSS*

38.5.4 INTENCLR

Address offset: 0x308

Disable interrupt

Bit number				31	30	29	28	27	26	25	24	23	22	21	20	19	18	17	16	15	14	13	12	11	10	9	8	7	6	5	4	3	2	1	0
Id																																D	C	B	A
Reset 0x00000000				**0**	**0**	**0**	**0**	**0**	**0**	**0**	**0**	**0**	**0**	**0**	**0**	**0**	**0**	**0**	**0**	**0**	**0**	**0**	**0**	**0**	**0**	**0**	**0**	**0**	**0**	**0**	**0**	**0**	**0**	**0**	**0**
Id	**RW**	**Field**	**Value Id**	**Value**																															
A	RW	READY																																	
			Clear	1																															

Write '1' to Disable interrupt for READY event

See *EVENTS_READY*

Bit number				31	30	29	28	27	26	25	24	23	22	21	20	19	18	17	16	15	14	13	12	11	10	9	8	7	6	5	4	3	2	1	0
Id																																D	C	B	A
Reset 0x00000000				**0**	**0**	**0**	**0**	**0**	**0**	**0**	**0**	**0**	**0**	**0**	**0**	**0**	**0**	**0**	**0**	**0**	**0**	**0**	**0**	**0**	**0**	**0**	**0**	**0**	**0**	**0**	**0**	**0**	**0**	**0**	**0**
Id	**RW**	**Field**	**Value Id**	**Value**																															
			Disabled	0																															
			Enabled	1																															
B	RW	DOWN																																	
			Clear	1																															
			Disabled	0																															
			Enabled	1																															
C	RW	UP																																	
			Clear	1																															
			Disabled	0																															
			Enabled	1																															
D	RW	CROSS																																	
			Clear	1																															
			Disabled	0																															
			Enabled	1																															

38.5.5 RESULT

Address offset: 0x400

Compare result

Bit number				31	30	29	28	27	26	25	24	23	22	21	20	19	18	17	16	15	14	13	12	11	10	9	8	7	6	5	4	3	2	1	0
Id																																			A
Reset 0x00000000				**0**	**0**	**0**	**0**	**0**	**0**	**0**	**0**	**0**	**0**	**0**	**0**	**0**	**0**	**0**	**0**	**0**	**0**	**0**	**0**	**0**	**0**	**0**	**0**	**0**	**0**	**0**	**0**	**0**	**0**	**0**	**0**
Id	**RW**	**Field**	**Value Id**	**Value**																															
A	R	RESULT																																	
			Below	0																															
			Above	1																															

38.5.6 ENABLE

Address offset: 0x500

COMP enable

Bit number				31	30	29	28	27	26	25	24	23	22	21	20	19	18	17	16	15	14	13	12	11	10	9	8	7	6	5	4	3	2	1	0
Id																																		A	A
Reset 0x00000000				**0**	**0**	**0**	**0**	**0**	**0**	**0**	**0**	**0**	**0**	**0**	**0**	**0**	**0**	**0**	**0**	**0**	**0**	**0**	**0**	**0**	**0**	**0**	**0**	**0**	**0**	**0**	**0**	**0**	**0**	**0**	**0**
Id	**RW**	**Field**	**Value Id**	**Value**																															
A	RW	ENABLE																																	
			Disabled	0																															
			Enabled	2																															

38.5.7 PSEL

Address offset: 0x504

Pin select

Bit number				31	30	29	28	27	26	25	24	23	22	21	20	19	18	17	16	15	14	13	12	11	10	9	8	7	6	5	4	3	2	1	0
Id																																	A	A	A
Reset 0x00000000				**0**	**0**	**0**	**0**	**0**	**0**	**0**	**0**	**0**	**0**	**0**	**0**	**0**	**0**	**0**	**0**	**0**	**0**	**0**	**0**	**0**	**0**	**0**	**0**	**0**	**0**	**0**	**0**	**0**	**0**	**0**	**0**
Id	**RW**	**Field**	**Value Id**	**Value**																															
A	RW	PSEL																																	

Bit number				31	30	29	28	27	26	25	24	23	22	21	20	19	18	17	16	15	14	13	12	11	10	9	8	7	6	5	4	3	2	1	0
Id																																	A	A	A
Reset 0x00000000				**0**	**0**	**0**	**0**	**0**	**0**	**0**	**0**	**0**	**0**	**0**	**0**	**0**	**0**	**0**	**0**	**0**	**0**	**0**	**0**	**0**	**0**	**0**	**0**	**0**	**0**	**0**	**0**	**0**	**0**	**0**	**0**
Id	**RW**	**Field**	**Value Id**	**Value**																															
			AnalogInput0	0																															
			AnalogInput1	1																															
			AnalogInput2	2																															
			AnalogInput3	3																															
			AnalogInput4	4																															
			AnalogInput5	5																															
			AnalogInput6	6																															
			AnalogInput7	7																															

38.5.8 REFSEL

Address offset: 0x508

Reference source select

Bit number				31	30	29	28	27	26	25	24	23	22	21	20	19	18	17	16	15	14	13	12	11	10	9	8	7	6	5	4	3	2	1	0
Id																																	A	A	A
Reset 0x00000004				**0**	**0**	**0**	**0**	**0**	**0**	**0**	**0**	**0**	**0**	**0**	**0**	**0**	**0**	**0**	**0**	**0**	**0**	**0**	**0**	**0**	**0**	**0**	**0**	**0**	**0**	**0**	**0**	**0**	**1**	**0**	**0**
Id	**RW**	**Field**	**Value Id**	**Value**																															
A	RW	REFSEL																																	
			Int1V2	0																															
			Int1V8	1																															
			Int2V4	2																															
			VDD	4																															
			ARef	7																															

38.5.9 EXTREFSEL

Address offset: 0x50C

External reference select

Bit number				31	30	29	28	27	26	25	24	23	22	21	20	19	18	17	16	15	14	13	12	11	10	9	8	7	6	5	4	3	2	1	0
Id																																			A
Reset 0x00000000				**0**	**0**	**0**	**0**	**0**	**0**	**0**	**0**	**0**	**0**	**0**	**0**	**0**	**0**	**0**	**0**	**0**	**0**	**0**	**0**	**0**	**0**	**0**	**0**	**0**	**0**	**0**	**0**	**0**	**0**	**0**	**0**
Id	**RW**	**Field**	**Value Id**	**Value**																															
A	RW	EXTREFSEL																																	
			AnalogReference0	0																															
			AnalogReference1	1																															

38.5.10 TH

Address offset: 0x530

Threshold configuration for hysteresis unit

Bit number				31	30	29	28	27	26	25	24	23	22	21	20	19	18	17	16	15	14	13	12	11	10	9	8	7	6	5	4	3	2	1	0
Id																						B	B	B	B	B	B			A	A	A	A	A	A
Reset 0x00000000				**0**	**0**	**0**	**0**	**0**	**0**	**0**	**0**	**0**	**0**	**0**	**0**	**0**	**0**	**0**	**0**	**0**	**0**	**0**	**0**	**0**	**0**	**0**	**0**	**0**	**0**	**0**	**0**	**0**	**0**	**0**	**0**
Id	**RW**	**Field**	**Value Id**	**Value**																															
A	RW	THDOWN		[63:0]																															
B	RW	THUP		[63:0]																															

38.5.11 MODE

Address offset: 0x534

Mode configuration

Bit number				31	30	29	28	27	26	25	24	23	22	21	20	19	18	17	16	15	14	13	12	11	10	9	8	7	6	5	4	3	2	1	0
Id																											B							A	A
Reset 0x00000000				**0**	**0**	**0**	**0**	**0**	**0**	**0**	**0**	**0**	**0**	**0**	**0**	**0**	**0**	**0**	**0**	**0**	**0**	**0**	**0**	**0**	**0**	**0**	**0**	**0**	**0**	**0**	**0**	**0**	**0**	**0**	**0**
Id	**RW**	**Field**	**Value Id**	**Value**																															
A	RW	SP																																	
			Low	0																															
			Normal	1																															
			High	2																															
B	RW	MAIN																																	
			SE	0																															
			Diff	1																															

38.5.12 HYST

Address offset: 0x538

Comparator hysteresis enable

Bit number				31	30	29	28	27	26	25	24	23	22	21	20	19	18	17	16	15	14	13	12	11	10	9	8	7	6	5	4	3	2	1	0
Id																																			A
Reset 0x00000000				**0**	**0**	**0**	**0**	**0**	**0**	**0**	**0**	**0**	**0**	**0**	**0**	**0**	**0**	**0**	**0**	**0**	**0**	**0**	**0**	**0**	**0**	**0**	**0**	**0**	**0**	**0**	**0**	**0**	**0**	**0**	**0**
Id	**RW**	**Field**	**Value Id**	**Value**																															
A	RW	HYST																																	
			NoHyst	0																															
			Hyst50mV	1																															

38.5.13 ISOURCE

Address offset: 0x53C

Current source select on analog input

Bit number				31	30	29	28	27	26	25	24	23	22	21	20	19	18	17	16	15	14	13	12	11	10	9	8	7	6	5	4	3	2	1	0
Id																																		A	A
Reset 0x00000000				**0**	**0**	**0**	**0**	**0**	**0**	**0**	**0**	**0**	**0**	**0**	**0**	**0**	**0**	**0**	**0**	**0**	**0**	**0**	**0**	**0**	**0**	**0**	**0**	**0**	**0**	**0**	**0**	**0**	**0**	**0**	**0**
Id	**RW**	**Field**	**Value Id**	**Value**																															
A	RW	ISOURCE																																	
			Off	0																															
			Ien2mA5	1																															
			Ien5mA	2																															
			Ien10mA	3																															

38.6 Electrical Specification

38.6.1 COMP Electrical Specification

Symbol	Description	Min.	Typ.	Max.	Units
$I_{COMP,LP}$	Core run current in low power mode		2		µA
$I_{COMP,N}$	Core run current in normal mode		5		µA
$I_{COMP,HS}$	Core run current in high-speed mode		10		µA
$t_{PROPDLY,LP}$	Propagation delay, low power mode[a]		0.6		µS
$t_{PROPDLY,N}$	Propagation delay, normal mode[a]		0.2		µS
$t_{PROPDLY,HS}$	Propagation delay, high-speed mode[a]		0.1		µS
I_{SOURCE}	Configurable input current provided by the output driven current source.				µA
$I_{SOURCE,A}$			2.5		µA
$I_{SOURCE,B}$			5.0		µA
$I_{SOURCE,C}$			10.0		µA

[a] Propagation delay is with 10mV overdrive.

Symbol	Description	Min.	Typ.	Max.	Units
$V_{DIFFHYST}$	Optional hysteresis applied to differential input		30		mV
$V_{VDD-VREF}$	Required difference between VDD and a selected VREF, VDD > VREF	0.3			V
I_{INT_REF}	Current used by the internal bandgap reference when selected as source for VREF		13		µA
$t_{INT\_REF,START}$	Startup time for the internal bandgap reference		50	80	µS
E_{INT_REF}	Internal bandgap reference error	-3		3	%
R_{LADDER}	Reference ladder resistance, ILADDER = VREF / RLADDER		550		kΩ
$V_{INPUTOFFSET}$	Input offset	-10		10	mV
$D_{NLLADDER}$	Differential non-linearity of reference ladder		<0.1		LSB
$t_{COMP,START}$	Startup time for the comparator core		3		µS

Total comparator run current must be calculated from the I_{COMP}, I_{INT_REF}, I_{SOURCE} and I_{LADDER} values for a given reference voltage.

39 LPCOMP — Low power comparator

LPCOMP compares an input voltage against a reference voltage.

Listed here are the main features of LPCOMP:

- 0 - VDD input range
- Ultra low power
- Eight input options (`AIN0` to `AIN7`)
- Reference voltage options:
  - Two external analog reference inputs, or
  - 15-level internal reference ladder (VDD/16)
- Optional hysteresis enable on input
- Wakeup source from OFF mode

In System ON, the LPCOMP can generate separate events on rising and falling edges of a signal, or sample the current state of the pin as being above or below the selected reference. The block can be configured to use any of the analog inputs on the device. Additionally, the low power comparator can be used as an analog wakeup source from System OFF or System ON. The comparator threshold can be programmed to a range of fractions of the supply voltage.

> **Restriction:** LPCOMP cannot be used (STARTed) at the same time as COMP. Only one comparator can be used at a time.

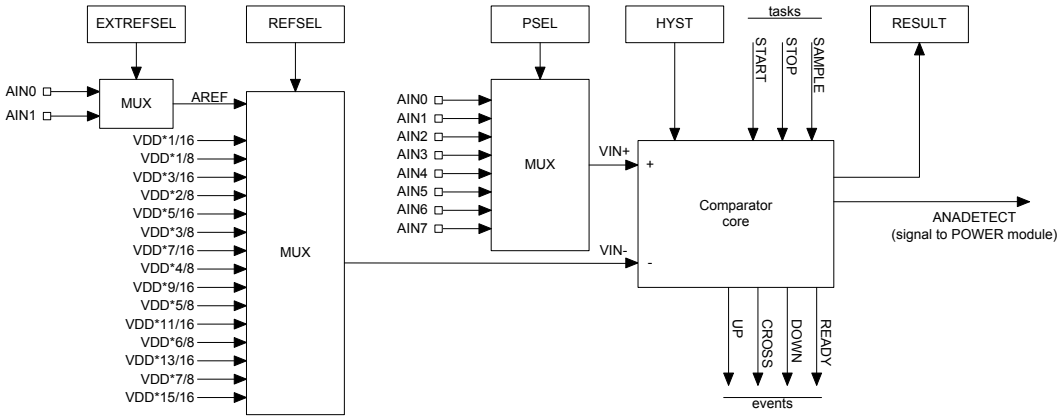

Figure 114: Low power comparator

The wakeup comparator (LPCOMP) compares an input voltage (VIN+), which comes from an analog input pin selected via the PSEL register against a reference voltage (VIN-) selected via the *REFSEL* on page 403 and *EXTREFSEL* registers.

The *PSEL*, *REFSEL*, and *EXTREFSEL* registers must be configured before the LPCOMP is enabled through the *ENABLE* register.

The *HYST* register allows enabling an optional hysteresis in the comparator core. This hysteresis is in the order of magnitude of 50 mV, and shall prevent noise on the signal to create unwanted events. See *Figure 115: Effect of hysteresis on a noisy input signal* on page 399 for illustration of the effect of an active hysteresis on a noisy input signal. It is disabled by default, and shall be configured before enabling LPCOMP as well.

The LPCOMP is started by triggering the START task. After a start-up time of $t_{LPCOMP,STARTUP}$ the LPCOMP will generate a READY event to indicate that the comparator is ready to use and the output of the LPCOMP is correct. The LPCOMP will generate events every time VIN+ crosses VIN-. More specifically, every time VIN+ rises above VIN- (upward crossing) an UP event is generated along with a CROSS event. Every time VIN+ falls below VIN- (downward crossing), a DOWN event is generated along with a CROSS event. When hysteresis is enabled, the upward crossing level becomes (VIN- + VHYST/2), and the downward crossing level becomes (VIN- - VHYST/2).

The LPCOMP is stopped by triggering the STOP task.

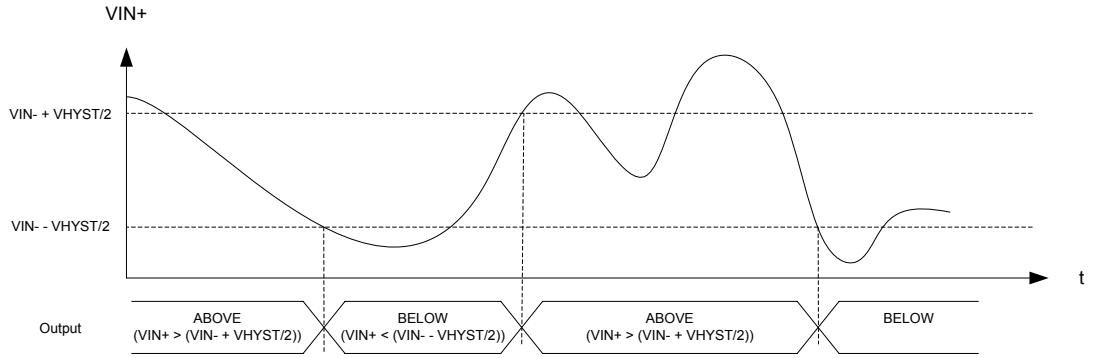

Figure 115: Effect of hysteresis on a noisy input signal

LPCOMP will be operational in both System ON and System OFF mode when it is enabled through the ENABLE register. See *POWER — Power supply* on page 76 for more information about power modes. Note that it is not allowed to go to System OFF when a READY event is pending to be generated.

All LPCOMP registers, including *ENABLE*, are classified as retained registers when the LPCOMP is enabled. However, when the device wakes up from System OFF, all LPCOMP registers will be reset.

The LPCOMP can wake up the system from System OFF by asserting the ANADETECT signal. The ANADETECT signal can be derived from any of the event sources that generate the UP, DOWN and CROSS events. In case of wakeup from System OFF, no events will be generated, only the ANADETECT signal. See the ANADETECT register (*ANADETECT* on page 403) for more information on how to configure the ANADETECT signal.

The immediate value of the LPCOMP can be sampled to *RESULT* on page 402 by triggering the SAMPLE task.

See *RESETREAS* on page 83 for more information on how to detect a wakeup from LPCOMP.

39.1 Shared resources

The LPCOMP shares resources with other peripherals.

The LPCOMP shares analog resources with SAADC and COMP. While it is possible to use SAADC at the same time as COMP or LPCOMP, COMP and LPCOMP are mutually exclusive: enabling one will automatically disable the other. In addition, when using SAADC and COMP or LPCOMP simultaneously, it is not possible to select the same analog input pin for both modules.

The LPCOMP peripheral shall not be disabled (by writing to the ENABLE register) before the peripheral has been stopped. Failing to do so may result in unpredictable behaviour.

39.2 Pin configuration

You can use the LPCOMP.PSEL register to select one of the analog input pins, `AIN0` through `AIN7`, as the analog input pin for the LPCOMP.

See *Figure 20: GPIO Port and the GPIO pin details* on page 108 for more information on the pins. Similarly, you can use *EXTREFSEL* on page 403 to select one of the analog reference input pins, `AIN0` and `AIN1`, as input for AREF in case AREF is selected in *EXTREFSEL* on page 403. The selected analog pins will be acquired by the LPCOMP when it is enabled through *ENABLE* on page 402.

39.3 Registers

Table 89: Instances

Base address	Peripheral	Instance	Description	Configuration
0x40013000	LPCOMP	LPCOMP	Low power comparator	

Table 90: Register Overview

Register	Offset	Description
TASKS_START	0x000	Start comparator
TASKS_STOP	0x004	Stop comparator
TASKS_SAMPLE	0x008	Sample comparator value
EVENTS_READY	0x100	LPCOMP is ready and output is valid
EVENTS_DOWN	0x104	Downward crossing
EVENTS_UP	0x108	Upward crossing
EVENTS_CROSS	0x10C	Downward or upward crossing
SHORTS	0x200	Shortcut register
INTENSET	0x304	Enable interrupt
INTENCLR	0x308	Disable interrupt
RESULT	0x400	Compare result
ENABLE	0x500	Enable LPCOMP
PSEL	0x504	Input pin select
REFSEL	0x508	Reference select
EXTREFSEL	0x50C	External reference select
ANADETECT	0x520	Analog detect configuration
HYST	0x538	Comparator hysteresis enable

39.3.1 SHORTS

Address offset: 0x200

Shortcut register

Bit number				31	30	29	28	27	26	25	24	23	22	21	20	19	18	17	16	15	14	13	12	11	10	9	8	7	6	5	4	3	2	1	0
Id																															E	D	C	B	A
Reset 0x00000000				**0**	**0**	**0**	**0**	**0**	**0**	**0**	**0**	**0**	**0**	**0**	**0**	**0**	**0**	**0**	**0**	**0**	**0**	**0**	**0**	**0**	**0**	**0**	**0**	**0**	**0**	**0**	**0**	**0**	**0**	**0**	**0**
Id	**RW**	**Field**	**Value Id**	**Value**																															
A	RW	READY_SAMPLE																																	
			Disabled	0																															
			Enabled	1																															
B	RW	READY_STOP																																	
			Disabled	0																															
			Enabled	1																															
C	RW	DOWN_STOP																																	
			Disabled	0																															
			Enabled	1																															
D	RW	UP_STOP																																	
			Disabled	0																															
			Enabled	1																															
E	RW	CROSS_STOP																																	
			Disabled	0																															

Shortcut between READY event and SAMPLE task

See *EVENTS_READY* and *TASKS_SAMPLE*

Disable shortcut

Enable shortcut

Shortcut between READY event and STOP task

See *EVENTS_READY* and *TASKS_STOP*

Disable shortcut

Enable shortcut

Shortcut between DOWN event and STOP task

See *EVENTS_DOWN* and *TASKS_STOP*

Disable shortcut

Enable shortcut

Shortcut between UP event and STOP task

See *EVENTS_UP* and *TASKS_STOP*

Disable shortcut

Enable shortcut

Shortcut between CROSS event and STOP task

See *EVENTS_CROSS* and *TASKS_STOP*

Disable shortcut

Bit number				31	30	29	28	27	26	25	24	23	22	21	20	19	18	17	16	15	14	13	12	11	10	9	8	7	6	5	4	3	2	1	0
Id																															E	D	C	B	A
Reset 0x00000000				**0**	**0**	**0**	**0**	**0**	**0**	**0**	**0**	**0**	**0**	**0**	**0**	**0**	**0**	**0**	**0**	**0**	**0**	**0**	**0**	**0**	**0**	**0**	**0**	**0**	**0**	**0**	**0**	**0**	**0**	**0**	**0**
Id	**RW**	**Field**	**Value Id**	**Value**																															
			Enabled	1																															

39.3.2 INTENSET

Address offset: 0x304

Enable interrupt

Bit number				31	30	29	28	27	26	25	24	23	22	21	20	19	18	17	16	15	14	13	12	11	10	9	8	7	6	5	4	3	2	1	0
Id																																D	C	B	A
Reset 0x00000000				**0**	**0**	**0**	**0**	**0**	**0**	**0**	**0**	**0**	**0**	**0**	**0**	**0**	**0**	**0**	**0**	**0**	**0**	**0**	**0**	**0**	**0**	**0**	**0**	**0**	**0**	**0**	**0**	**0**	**0**	**0**	**0**
Id	**RW**	**Field**	**Value Id**	**Value**																															
A	RW	READY																																	

39.3.3 INTENCLR

Address offset: 0x308

Disable interrupt

Bit number				31	30	29	28	27	26	25	24	23	22	21	20	19	18	17	16	15	14	13	12	11	10	9	8	7	6	5	4	3	2	1	0
Id																																D	C	B	A
Reset 0x00000000				**0**	**0**	**0**	**0**	**0**	**0**	**0**	**0**	**0**	**0**	**0**	**0**	**0**	**0**	**0**	**0**	**0**	**0**	**0**	**0**	**0**	**0**	**0**	**0**	**0**	**0**	**0**	**0**	**0**	**0**	**0**	**0**
Id	**RW**	**Field**	**Value Id**	**Value**																															
A	RW	READY																																	

Bit number				31	30	29	28	27	26	25	24	23	22	21	20	19	18	17	16	15	14	13	12	11	10	9	8	7	6	5	4	3	2	1	0
Id																																D	C	B	A
Reset 0x00000000				**0**	**0**	**0**	**0**	**0**	**0**	**0**	**0**	**0**	**0**	**0**	**0**	**0**	**0**	**0**	**0**	**0**	**0**	**0**	**0**	**0**	**0**	**0**	**0**	**0**	**0**	**0**	**0**	**0**	**0**	**0**	**0**
Id	**RW**	**Field**	**Value Id**	**Value**																															
			Clear	1																															
			Disabled	0																															
			Enabled	1																															
D	RW	CROSS																																	
			Clear	1																															
			Disabled	0																															
			Enabled	1																															

Write '1' to Disable interrupt for CROSS event

See *EVENTS_CROSS*

39.3.4 RESULT

Address offset: 0x400

Compare result

Bit number				31	30	29	28	27	26	25	24	23	22	21	20	19	18	17	16	15	14	13	12	11	10	9	8	7	6	5	4	3	2	1	0
Id																																			A
Reset 0x00000000				**0**	**0**	**0**	**0**	**0**	**0**	**0**	**0**	**0**	**0**	**0**	**0**	**0**	**0**	**0**	**0**	**0**	**0**	**0**	**0**	**0**	**0**	**0**	**0**	**0**	**0**	**0**	**0**	**0**	**0**	**0**	**0**
Id	**RW**	**Field**	**Value Id**	**Value**																															
A	R	RESULT																																	
			Bellow	0																															
			Above	1																															

Result of last compare. Decision point SAMPLE task.

39.3.5 ENABLE

Address offset: 0x500

Enable LPCOMP

Bit number				31	30	29	28	27	26	25	24	23	22	21	20	19	18	17	16	15	14	13	12	11	10	9	8	7	6	5	4	3	2	1	0
Id																																		A	A
Reset 0x00000000				**0**	**0**	**0**	**0**	**0**	**0**	**0**	**0**	**0**	**0**	**0**	**0**	**0**	**0**	**0**	**0**	**0**	**0**	**0**	**0**	**0**	**0**	**0**	**0**	**0**	**0**	**0**	**0**	**0**	**0**	**0**	**0**
Id	**RW**	**Field**	**Value Id**	**Value**																															
A	RW	ENABLE																																	
			Disabled	0																															
			Enabled	1																															

Enable or disable LPCOMP

39.3.6 PSEL

Address offset: 0x504

Input pin select

Bit number				31	30	29	28	27	26	25	24	23	22	21	20	19	18	17	16	15	14	13	12	11	10	9	8	7	6	5	4	3	2	1	0
Id																																	A	A	A
Reset 0x00000000				**0**	**0**	**0**	**0**	**0**	**0**	**0**	**0**	**0**	**0**	**0**	**0**	**0**	**0**	**0**	**0**	**0**	**0**	**0**	**0**	**0**	**0**	**0**	**0**	**0**	**0**	**0**	**0**	**0**	**0**	**0**	**0**
Id	**RW**	**Field**	**Value Id**	**Value**																															
A	RW	PSEL																																	
			AnalogInput0	0																															
			AnalogInput1	1																															
			AnalogInput2	2																															
			AnalogInput3	3																															
			AnalogInput4	4																															
			AnalogInput5	5																															
			AnalogInput6	6																															
			AnalogInput7	7																															

AIN0 selected as analog input
AIN1 selected as analog input
AIN2 selected as analog input
AIN3 selected as analog input
AIN4 selected as analog input
AIN5 selected as analog input
AIN6 selected as analog input
AIN7 selected as analog input

39.3.7 REFSEL

Address offset: 0x508

Reference select

Bit number				31	30	29	28	27	26	25	24	23	22	21	20	19	18	17	16	15	14	13	12	11	10	9	8	7	6	5	4	3	2	1	0
Id																																A	A	A	A
Reset 0x00000004				**0**	**0**	**0**	**0**	**0**	**0**	**0**	**0**	**0**	**0**	**0**	**0**	**0**	**0**	**0**	**0**	**0**	**0**	**0**	**0**	**0**	**0**	**0**	**0**	**0**	**0**	**0**	**0**	**0**	**1**	**0**	**0**
Id	**RW**	**Field**	**Value Id**	**Value**																															
A	RW	REFSEL																																	
			Ref1_8Vdd	0																															
			Ref2_8Vdd	1																															
			Ref3_8Vdd	2																															
			Ref4_8Vdd	3																															
			Ref5_8Vdd	4																															
			Ref6_8Vdd	5																															
			Ref7_8Vdd	6																															
			ARef	7																															
			Ref1_16Vdd	8																															
			Ref3_16Vdd	9																															
			Ref5_16Vdd	10																															
			Ref7_16Vdd	11																															
			Ref9_16Vdd	12																															
			Ref11_16Vdd	13																															
			Ref13_16Vdd	14																															
			Ref15_16Vdd	15																															

39.3.8 EXTREFSEL

Address offset: 0x50C

External reference select

Bit number				31	30	29	28	27	26	25	24	23	22	21	20	19	18	17	16	15	14	13	12	11	10	9	8	7	6	5	4	3	2	1	0
Id																																			A
Reset 0x00000000				**0**	**0**	**0**	**0**	**0**	**0**	**0**	**0**	**0**	**0**	**0**	**0**	**0**	**0**	**0**	**0**	**0**	**0**	**0**	**0**	**0**	**0**	**0**	**0**	**0**	**0**	**0**	**0**	**0**	**0**	**0**	**0**
Id	**RW**	**Field**	**Value Id**	**Value**																															
A	RW	EXTREFSEL																																	
			AnalogReference0	0																															
			AnalogReference1	1																															

39.3.9 ANADETECT

Address offset: 0x520

Analog detect configuration

Bit number				31	30	29	28	27	26	25	24	23	22	21	20	19	18	17	16	15	14	13	12	11	10	9	8	7	6	5	4	3	2	1	0
Id																																		A	A
Reset 0x00000000				**0**	**0**	**0**	**0**	**0**	**0**	**0**	**0**	**0**	**0**	**0**	**0**	**0**	**0**	**0**	**0**	**0**	**0**	**0**	**0**	**0**	**0**	**0**	**0**	**0**	**0**	**0**	**0**	**0**	**0**	**0**	**0**
Id	**RW**	**Field**	**Value Id**	**Value**																															
A	RW	ANADETECT																																	
			Cross	0																															
			Up	1																															
			Down	2																															

39.3.10 HYST

Address offset: 0x538

Comparator hysteresis enable

Bit number	31	30	29	28	27	26	25	24	23	22	21	20	19	18	17	16	15	14	13	12	11	10	9	8	7	6	5	4	3	2	1	0
Id																																A
Reset 0x00000000	**0**	**0**	**0**	**0**	**0**	**0**	**0**	**0**	**0**	**0**	**0**	**0**	**0**	**0**	**0**	**0**	**0**	**0**	**0**	**0**	**0**	**0**	**0**	**0**	**0**	**0**	**0**	**0**	**0**	**0**	**0**	**0**

Id	RW	Field	Value Id	Value	Description
A	RW	HYST			Comparator hysteresis enable
			NoHyst	0	Comparator hysteresis disabled
			Hyst50mV	1	Comparator hysteresis disabled (typ. 50 mV)

39.4 Electrical Specification

39.4.1 LPCOMP Electrical Specification

Symbol	Description	Min.	Typ.	Max.	Units
I_{LPC}	Run current for low power comparator		0.5		µA
$t_{LPCANADET}$	Time from VIN crossing (>=50mV above threshold) to ANADETECT signal generated.		5		µs
$E_{REFLADDER}$	Error in reference ladder threshold voltage	-30		30	mV
V_{HYST}	Optional hysteresis		30		mV

40 WDT — Watchdog timer

A countdown watchdog timer using the low-frequency clock source (LFCLK) offers configurable and robust protection against application lock-up.

The watchdog timer is started by triggering the START task.

The watchdog can be paused during long CPU sleep periods for low power applications and when the debugger has halted the CPU. The watchdog is implemented as a down-counter that generates a TIMEOUT event when it wraps over after counting down to 0. When the watchdog timer is started through the START task, the watchdog counter is loaded with the value specified in the CRV register. This counter is also reloaded with the value specified in the CRV register when a reload request is granted.

The watchdog's timeout period is given by:

```
timeout [s] = ( CRV + 1 ) / 32768
```

When started, the watchdog will automatically force the 32.768 kHz RC oscillator on as long as no other 32.768 kHz clock source is running and generating the 32.768 kHz system clock, see chapter *CLOCK — Clock control* on page 98.

40.1 Reload criteria

The watchdog has eight separate reload request registers, which shall be used to request the watchdog to reload its counter with the value specified in the CRV register. To reload the watchdog counter, the special value 0x6E524635 needs to be written to all enabled reload registers.

One or more RR registers can be individually enabled through the RREN register.

40.2 Temporarily pausing the watchdog

By default, the watchdog will be active counting down the down-counter while the CPU is sleeping and when it is halted by the debugger. It is however possible to configure the watchdog to automatically pause while the CPU is sleeping as well as when it is halted by the debugger.

40.3 Watchdog reset

A TIMEOUT event will automatically lead to a watchdog reset.

See *Reset* on page 80 for more information about reset sources. If the watchdog is configured to generate an interrupt on the TIMEOUT event, the watchdog reset will be postponed with two 32.768 kHz clock cycles after the TIMEOUT event has been generated. Once the TIMEOUT event has been generated, the impending watchdog reset will always be effectuated.

The watchdog must be configured before it is started. After it is started, the watchdog's configuration registers, which comprise registers CRV, RREN, and CONFIG, will be blocked for further configuration.

The watchdog can be reset from several reset sources, see *Reset behavior* on page 81.

When the device starts running again, after a reset, or waking up from OFF mode, the watchdog configuration registers will be available for configuration again.

40.4 Registers

Table 91: Instances

Base address	Peripheral	Instance	Description	Configuration
0x40010000	WDT	WDT	Watchdog Timer	

Table 92: Register Overview

Register	Offset	Description
TASKS_START	0x000	Start the watchdog
EVENTS_TIMEOUT	0x100	Watchdog timeout
INTENSET	0x304	Enable interrupt
INTENCLR	0x308	Disable interrupt
RUNSTATUS	0x400	Run status
REQSTATUS	0x404	Request status
CRV	0x504	Counter reload value
RREN	0x508	Enable register for reload request registers
CONFIG	0x50C	Configuration register
RR[0]	0x600	Reload request 0
RR[1]	0x604	Reload request 1
RR[2]	0x608	Reload request 2
RR[3]	0x60C	Reload request 3
RR[4]	0x610	Reload request 4
RR[5]	0x614	Reload request 5
RR[6]	0x618	Reload request 6
RR[7]	0x61C	Reload request 7

40.4.1 INTENSET

Address offset: 0x304

Enable interrupt

Bit number	31	30	29	28	27	26	25	24	23	22	21	20	19	18	17	16	15	14	13	12	11	10	9	8	7	6	5	4	3	2	1	0
Id																																A
Reset 0x00000000	**0**	**0**	**0**	**0**	**0**	**0**	**0**	**0**	**0**	**0**	**0**	**0**	**0**	**0**	**0**	**0**	**0**	**0**	**0**	**0**	**0**	**0**	**0**	**0**	**0**	**0**	**0**	**0**	**0**	**0**	**0**	**0**

Id	RW	Field	Value Id	Value	Description
A	RW	TIMEOUT			Write '1' to Enable interrupt for TIMEOUT event See *EVENTS_TIMEOUT*
			Set	1	Enable
			Disabled	0	Read: Disabled
			Enabled	1	Read: Enabled

40.4.2 INTENCLR

Address offset: 0x308

Disable interrupt

Bit number	31	30	29	28	27	26	25	24	23	22	21	20	19	18	17	16	15	14	13	12	11	10	9	8	7	6	5	4	3	2	1	0
Id																																A
Reset 0x00000000	**0**	**0**	**0**	**0**	**0**	**0**	**0**	**0**	**0**	**0**	**0**	**0**	**0**	**0**	**0**	**0**	**0**	**0**	**0**	**0**	**0**	**0**	**0**	**0**	**0**	**0**	**0**	**0**	**0**	**0**	**0**	**0**

Id	RW	Field	Value Id	Value	Description
A	RW	TIMEOUT			Write '1' to Disable interrupt for TIMEOUT event See *EVENTS_TIMEOUT*
			Clear	1	Disable
			Disabled	0	Read: Disabled
			Enabled	1	Read: Enabled

40.4.3 RUNSTATUS

Address offset: 0x400

Run status

Bit number				31	30	29	28	27	26	25	24	23	22	21	20	19	18	17	16	15	14	13	12	11	10	9	8	7	6	5	4	3	2	1	0
Id																																			A
Reset 0x00000000				**0**	**0**	**0**	**0**	**0**	**0**	**0**	**0**	**0**	**0**	**0**	**0**	**0**	**0**	**0**	**0**	**0**	**0**	**0**	**0**	**0**	**0**	**0**	**0**	**0**	**0**	**0**	**0**	**0**	**0**	**0**	**0**
Id	**RW**	**Field**	**Value Id**	**Value**								**Description**																							
A	R	RUNSTATUS										Indicates whether or not the watchdog is running																							
			NotRunning	0								Watchdog not running																							
			Running	1								Watchdog is running																							

40.4.4 REQSTATUS

Address offset: 0x404

Request status

Bit number				31	30	29	28	27	26	25	24	23	22	21	20	19	18	17	16	15	14	13	12	11	10	9	8	7	6	5	4	3	2	1	0
Id																												H	G	F	E	D	C	B	A
Reset 0x00000001				**0**	**0**	**0**	**0**	**0**	**0**	**0**	**0**	**0**	**0**	**0**	**0**	**0**	**0**	**0**	**0**	**0**	**0**	**0**	**0**	**0**	**0**	**0**	**0**	**0**	**0**	**0**	**0**	**0**	**0**	**0**	**1**
Id	**RW**	**Field**	**Value Id**	**Value**								**Description**																							
A	R	RR0										Request status for RR[0] register																							
			DisabledOrRequested	0								RR[0] register is not enabled, or are already requesting reload																							
			EnabledAndUnrequested	1								RR[0] register is enabled, and are not yet requesting reload																							
B	R	RR1										Request status for RR[1] register																							
			DisabledOrRequested	0								RR[1] register is not enabled, or are already requesting reload																							
			EnabledAndUnrequested	1								RR[1] register is enabled, and are not yet requesting reload																							
C	R	RR2										Request status for RR[2] register																							
			DisabledOrRequested	0								RR[2] register is not enabled, or are already requesting reload																							
			EnabledAndUnrequested	1								RR[2] register is enabled, and are not yet requesting reload																							
D	R	RR3										Request status for RR[3] register																							
			DisabledOrRequested	0								RR[3] register is not enabled, or are already requesting reload																							
			EnabledAndUnrequested	1								RR[3] register is enabled, and are not yet requesting reload																							
E	R	RR4										Request status for RR[4] register																							
			DisabledOrRequested	0								RR[4] register is not enabled, or are already requesting reload																							
			EnabledAndUnrequested	1								RR[4] register is enabled, and are not yet requesting reload																							
F	R	RR5										Request status for RR[5] register																							
			DisabledOrRequested	0								RR[5] register is not enabled, or are already requesting reload																							
			EnabledAndUnrequested	1								RR[5] register is enabled, and are not yet requesting reload																							
G	R	RR6										Request status for RR[6] register																							
			DisabledOrRequested	0								RR[6] register is not enabled, or are already requesting reload																							
			EnabledAndUnrequested	1								RR[6] register is enabled, and are not yet requesting reload																							
H	R	RR7										Request status for RR[7] register																							
			DisabledOrRequested	0								RR[7] register is not enabled, or are already requesting reload																							
			EnabledAndUnrequested	1								RR[7] register is enabled, and are not yet requesting reload																							

40.4.5 CRV

Address offset: 0x504

Counter reload value

Bit number				31	30	29	28	27	26	25	24	23	22	21	20	19	18	17	16	15	14	13	12	11	10	9	8	7	6	5	4	3	2	1	0
Id				A	A	A	A	A	A	A	A	A	A	A	A	A	A	A	A	A	A	A	A	A	A	A	A	A	A	A	A	A	A	A	A
Reset 0xFFFFFFFF				**1**	**1**	**1**	**1**	**1**	**1**	**1**	**1**	**1**	**1**	**1**	**1**	**1**	**1**	**1**	**1**	**1**	**1**	**1**	**1**	**1**	**1**	**1**	**1**	**1**	**1**	**1**	**1**	**1**	**1**	**1**	**1**
Id	**RW**	**Field**	**Value Id**	**Value**								**Description**																							
A	RW	CRV		[0x0000000F..0xFFFFFFFF								Counter reload value in number of cycles of the 32.768 kHz clock																							

40.4.6 RREN

Address offset: 0x508

Enable register for reload request registers

Bit number				31	30	29	28	27	26	25	24	23	22	21	20	19	18	17	16	15	14	13	12	11	10	9	8	7	6	5	4	3	2	1	0
Id																												H	G	F	E	D	C	B	A
Reset 0x00000001				**0**	**0**	**0**	**0**	**0**	**0**	**0**	**0**	**0**	**0**	**0**	**0**	**0**	**0**	**0**	**0**	**0**	**0**	**0**	**0**	**0**	**0**	**0**	**0**	**0**	**0**	**0**	**0**	**0**	**0**	**0**	**1**
Id	**RW**	**Field**	**Value Id**	**Value**								**Description**																							
A	RW	RR0										Enable or disable RR[0] register																							
			Disabled	0								Disable RR[0] register																							
			Enabled	1								Enable RR[0] register																							
B	RW	RR1										Enable or disable RR[1] register																							
			Disabled	0								Disable RR[1] register																							
			Enabled	1								Enable RR[1] register																							
C	RW	RR2										Enable or disable RR[2] register																							
			Disabled	0								Disable RR[2] register																							
			Enabled	1								Enable RR[2] register																							
D	RW	RR3										Enable or disable RR[3] register																							
			Disabled	0								Disable RR[3] register																							
			Enabled	1								Enable RR[3] register																							
E	RW	RR4										Enable or disable RR[4] register																							
			Disabled	0								Disable RR[4] register																							
			Enabled	1								Enable RR[4] register																							
F	RW	RR5										Enable or disable RR[5] register																							
			Disabled	0								Disable RR[5] register																							
			Enabled	1								Enable RR[5] register																							
G	RW	RR6										Enable or disable RR[6] register																							
			Disabled	0								Disable RR[6] register																							
			Enabled	1								Enable RR[6] register																							
H	RW	RR7										Enable or disable RR[7] register																							
			Disabled	0								Disable RR[7] register																							
			Enabled	1								Enable RR[7] register																							

40.4.7 CONFIG

Address offset: 0x50C

Configuration register

Bit number				31	30	29	28	27	26	25	24	23	22	21	20	19	18	17	16	15	14	13	12	11	10	9	8	7	6	5	4	3	2	1	0
Id																																C			A
Reset 0x00000001				**0**	**0**	**0**	**0**	**0**	**0**	**0**	**0**	**0**	**0**	**0**	**0**	**0**	**0**	**0**	**0**	**0**	**0**	**0**	**0**	**0**	**0**	**0**	**0**	**0**	**0**	**0**	**0**	**0**	**0**	**0**	**1**
Id	**RW**	**Field**	**Value Id**	**Value**								**Description**																							
A	RW	SLEEP										Configure the watchdog to either be paused, or kept running, while the CPU is sleeping																							
			Pause	0								Pause watchdog while the CPU is sleeping																							
			Run	1								Keep the watchdog running while the CPU is sleeping																							
C	RW	HALT										Configure the watchdog to either be paused, or kept running, while the CPU is halted by the debugger																							
			Pause	0								Pause watchdog while the CPU is halted by the debugger																							
			Run	1								Keep the watchdog running while the CPU is halted by the debugger																							

40.4.8 RR[0]

Address offset: 0x600

Reload request 0

Bit number				31	30	29	28	27	26	25	24	23	22	21	20	19	18	17	16	15	14	13	12	11	10	9	8	7	6	5	4	3	2	1	0
Id				A	A	A	A	A	A	A	A	A	A	A	A	A	A	A	A	A	A	A	A	A	A	A	A	A	A	A	A	A	A	A	A
Reset 0x00000000				**0**	**0**	**0**	**0**	**0**	**0**	**0**	**0**	**0**	**0**	**0**	**0**	**0**	**0**	**0**	**0**	**0**	**0**	**0**	**0**	**0**	**0**	**0**	**0**	**0**	**0**	**0**	**0**	**0**	**0**	**0**	**0**
Id	**RW**	**Field**	**Value Id**	**Value**																															**Description**
A	W	RR																																	Reload request register
			Reload	0x6E524635																															Value to request a reload of the watchdog timer

40.4.9 RR[1]

Address offset: 0x604

Reload request 1

Bit number				31	30	29	28	27	26	25	24	23	22	21	20	19	18	17	16	15	14	13	12	11	10	9	8	7	6	5	4	3	2	1	0
Id				A	A	A	A	A	A	A	A	A	A	A	A	A	A	A	A	A	A	A	A	A	A	A	A	A	A	A	A	A	A	A	A
Reset 0x00000000				**0**	**0**	**0**	**0**	**0**	**0**	**0**	**0**	**0**	**0**	**0**	**0**	**0**	**0**	**0**	**0**	**0**	**0**	**0**	**0**	**0**	**0**	**0**	**0**	**0**	**0**	**0**	**0**	**0**	**0**	**0**	**0**
Id	**RW**	**Field**	**Value Id**	**Value**																															**Description**
A	W	RR																																	Reload request register
			Reload	0x6E524635																															Value to request a reload of the watchdog timer

40.4.10 RR[2]

Address offset: 0x608

Reload request 2

Bit number				31	30	29	28	27	26	25	24	23	22	21	20	19	18	17	16	15	14	13	12	11	10	9	8	7	6	5	4	3	2	1	0
Id				A	A	A	A	A	A	A	A	A	A	A	A	A	A	A	A	A	A	A	A	A	A	A	A	A	A	A	A	A	A	A	A
Reset 0x00000000				**0**	**0**	**0**	**0**	**0**	**0**	**0**	**0**	**0**	**0**	**0**	**0**	**0**	**0**	**0**	**0**	**0**	**0**	**0**	**0**	**0**	**0**	**0**	**0**	**0**	**0**	**0**	**0**	**0**	**0**	**0**	**0**
Id	**RW**	**Field**	**Value Id**	**Value**																															**Description**
A	W	RR																																	Reload request register
			Reload	0x6E524635																															Value to request a reload of the watchdog timer

40.4.11 RR[3]

Address offset: 0x60C

Reload request 3

Bit number				31	30	29	28	27	26	25	24	23	22	21	20	19	18	17	16	15	14	13	12	11	10	9	8	7	6	5	4	3	2	1	0
Id				A	A	A	A	A	A	A	A	A	A	A	A	A	A	A	A	A	A	A	A	A	A	A	A	A	A	A	A	A	A	A	A
Reset 0x00000000				**0**	**0**	**0**	**0**	**0**	**0**	**0**	**0**	**0**	**0**	**0**	**0**	**0**	**0**	**0**	**0**	**0**	**0**	**0**	**0**	**0**	**0**	**0**	**0**	**0**	**0**	**0**	**0**	**0**	**0**	**0**	**0**
Id	**RW**	**Field**	**Value Id**	**Value**																															**Description**
A	W	RR																																	Reload request register
			Reload	0x6E524635																															Value to request a reload of the watchdog timer

40.4.12 RR[4]

Address offset: 0x610

Reload request 4

Bit number				31	30	29	28	27	26	25	24	23	22	21	20	19	18	17	16	15	14	13	12	11	10	9	8	7	6	5	4	3	2	1	0
Id				A	A	A	A	A	A	A	A	A	A	A	A	A	A	A	A	A	A	A	A	A	A	A	A	A	A	A	A	A	A	A	A
Reset 0x00000000				**0**	**0**	**0**	**0**	**0**	**0**	**0**	**0**	**0**	**0**	**0**	**0**	**0**	**0**	**0**	**0**	**0**	**0**	**0**	**0**	**0**	**0**	**0**	**0**	**0**	**0**	**0**	**0**	**0**	**0**	**0**	**0**
Id	**RW**	**Field**	**Value Id**	**Value**																															**Description**
A	W	RR																																	Reload request register
			Reload	0x6E524635																															Value to request a reload of the watchdog timer

40.4.13 RR[5]

Address offset: 0x614

Reload request 5

Bit number				31	30	29	28	27	26	25	24	23	22	21	20	19	18	17	16	15	14	13	12	11	10	9	8	7	6	5	4	3	2	1	0
Id				A	A	A	A	A	A	A	A	A	A	A	A	A	A	A	A	A	A	A	A	A	A	A	A	A	A	A	A	A	A	A	A
Reset 0x00000000				**0**	**0**	**0**	**0**	**0**	**0**	**0**	**0**	**0**	**0**	**0**	**0**	**0**	**0**	**0**	**0**	**0**	**0**	**0**	**0**	**0**	**0**	**0**	**0**	**0**	**0**	**0**	**0**	**0**	**0**	**0**	**0**
Id	**RW**	**Field**	**Value Id**	**Value**								**Description**																							
A	W	RR										Reload request register																							
			Reload	0x6E524635								Value to request a reload of the watchdog timer																							

40.4.14 RR[6]

Address offset: 0x618

Reload request 6

Bit number				31	30	29	28	27	26	25	24	23	22	21	20	19	18	17	16	15	14	13	12	11	10	9	8	7	6	5	4	3	2	1	0
Id				A	A	A	A	A	A	A	A	A	A	A	A	A	A	A	A	A	A	A	A	A	A	A	A	A	A	A	A	A	A	A	A
Reset 0x00000000				**0**	**0**	**0**	**0**	**0**	**0**	**0**	**0**	**0**	**0**	**0**	**0**	**0**	**0**	**0**	**0**	**0**	**0**	**0**	**0**	**0**	**0**	**0**	**0**	**0**	**0**	**0**	**0**	**0**	**0**	**0**	**0**
Id	**RW**	**Field**	**Value Id**	**Value**								**Description**																							
A	W	RR										Reload request register																							
			Reload	0x6E524635								Value to request a reload of the watchdog timer																							

40.4.15 RR[7]

Address offset: 0x61C

Reload request 7

Bit number				31	30	29	28	27	26	25	24	23	22	21	20	19	18	17	16	15	14	13	12	11	10	9	8	7	6	5	4	3	2	1	0
Id				A	A	A	A	A	A	A	A	A	A	A	A	A	A	A	A	A	A	A	A	A	A	A	A	A	A	A	A	A	A	A	A
Reset 0x00000000				**0**	**0**	**0**	**0**	**0**	**0**	**0**	**0**	**0**	**0**	**0**	**0**	**0**	**0**	**0**	**0**	**0**	**0**	**0**	**0**	**0**	**0**	**0**	**0**	**0**	**0**	**0**	**0**	**0**	**0**	**0**	**0**
Id	**RW**	**Field**	**Value Id**	**Value**								**Description**																							
A	W	RR										Reload request register																							
			Reload	0x6E524635								Value to request a reload of the watchdog timer																							

40.5 Electrical Specification

40.5.1 Watchdog Timer Electrical Specification

Symbol	Description	Min.	Typ.	Max.	Units
I_{WDT}	Run current for watchdog timer		0.3	2	µA
t_{WDT}	Time out interval	458 µs		36 h	

41 SWI — Software interrupts

A set of interrupts have been reserved for use as software interrupts.

41.1 Registers

Table 93: Instances

Base address	Peripheral	Instance	Description	Configuration
0x40014000	SWI	SWI0	Software interrupt 0	
0x40015000	SWI	SWI1	Software interrupt 1	
0x40016000	SWI	SWI2	Software interrupt 2	
0x40017000	SWI	SWI3	Software interrupt 3	
0x40018000	SWI	SWI4	Software interrupt 4	
0x40019000	SWI	SWI5	Software interrupt 5	

42 NFCT — Near field communication tag

The NFCT peripheral (referred to as the 'NFC peripheral' from now on) supports communication signal interface type A and 106 kbps bit rate from the NFC Forum.

With appropriate software, the NFC peripheral can be used to emulate the listening device NFC-A as specified by the NFC Forum.

Listed here are the main features for the NFC peripheral:

- NFC-A listen mode operation
  - 13.56 MHz input frequency
  - Bit rate 106 kbps
- Wake-on-field low power field detection (SENSE) mode
- Frame assemble and disassemble for the NFC-A frames specified by the NFC Forum
- Programmable frame timing controller
- Integrated automatic collision resolution, CRC and parity functions

42.1 Overview

The NFC peripheral is an implementation of an NFC Forum compliant listening device NFC-A.

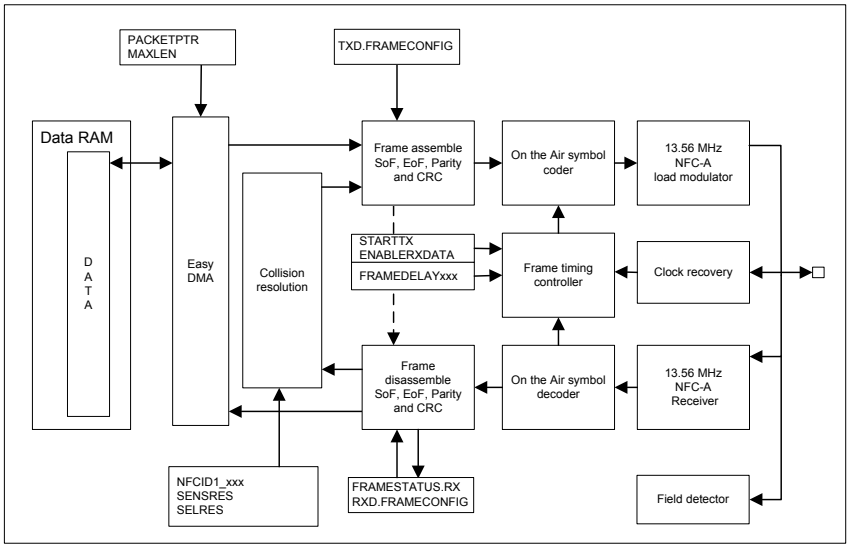

Figure 116: NFC block diagram

The NFC peripheral contains a 13.56 MHz AM receiver and a 13.56 MHz load modulator compatible with the NFC-A technology defined in the NFC Forum with 106 kbps data rate.

The received frames will be automatically disassembled and the data part of the frame transferred to RAM. When transmitting, the frame data will be transferred directly from RAM and transmitted with configurable frame type and delay timing. The system will be notified by an event whenever a complete frame is received or sent.

It also supports the collision detection and resolution ("anticollision") as defined by the NFC Forum.

Wake-on-field is supported in SENSE mode while the device is either in System OFF or System ON mode. When the antenna enters an NFC field, an event will be triggered notifying the system to activate the NFC functionality for incoming frames. In System ON, if the energy detected at the antenna increases beyond a threshold value, the module will generate a FIELDDETECTED event. The module will generate a

FIELDLOST event when the quality or strength of the field no longer support NFC communication. Please refer to *NFCT Electrical Specification* on page 431 for the Low Power Field Detect threshold values.

In system OFF, the NFC Low Power Field Detect function can wake the system up through a reset. The NFC bit in register *RESETREAS* on page 83 will be set as cause of the wake-up.

If the system is put into system OFF mode while a field is already present, the NFC Low Power Field Detect function will wake the system up right away and generate a reset.

Note that as a consequence of reset, NFC is disabled, so the reset handler will have to activate NFC again and set it up properly.

The HFXO must be running before the NFC peripheral goes into ACTIVATED state. Note that the NFC peripheral calibration is automatically done on ACTIVATE task. The HFXO can be turned off when the NFC peripheral goes into SENSE mode. The shortcut FIELDDETECTED_ACTIVATE can be used when the HFXO is already running while in SENSE mode.

Outgoing data will be collected from RAM with the EasyDMA function and assembled according to the TXD.FRAMECONFIG register. Incoming data will be disassembled according to the RXD.FRAMECONFIG register and the data section in the frame will be written to RAM via the EasyDMA function.

The NFC peripheral includes a frame timing controller that can be used to accurately control the inter-frame delay between the incoming frame and a corresponding outgoing frame. It also includes optional CRC functionality.

The NFC peripheral has a set of different states. The module can change state by triggering a task, or when specific operations are finalized. Events and tasks allow software to keep track of and change the current state.

See *Figure 116: NFC block diagram* on page 412 and *Figure 117: NFC state diagram* on page 413 for more information.

Notes:

- FIELDLOST event will not be reflected in the state machine (for instance by going back to the DISABLE state), it is up to software to decide on the actions to take when a field lost occurs.
- FIELDLOST event is not generated in SENSE mode.
- FIELDDETECTED event is generated only on the transition from FIELDLOST event to energy detected by the NFC peripheral. So, sending SENSE task while field is still present does not generate FIELDDETECTED event.
- If the FIELDDETECTED event is cleared before sending the ACTIVATE task, then the FIELDDETECTED event shows up again after sending the ACTIVATE task. The shortcut FIELDDETECTED_ACTIVATE can be used to avoid this condition.

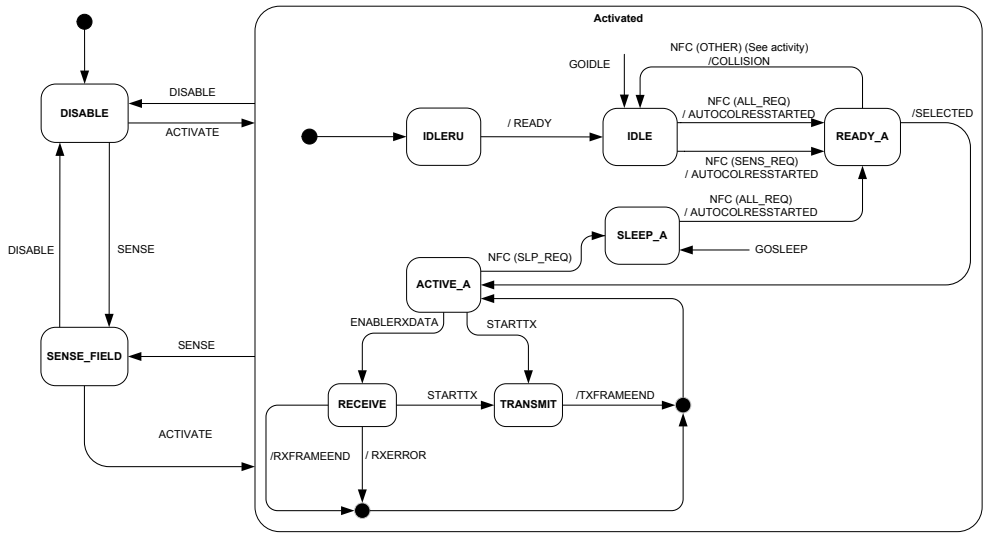

Figure 117: NFC state diagram

42.2 Pin configuration

NFC uses two pins to connect the antenna.

These pins are shared with GPIOs, and the PROTECT field in the NFCPINS register in *UICR* defines the usage of these pins and their protection level against excessive voltages. The content of the NFCPINS register is reloaded at every reset.

When NFCPINS.PROTECT=NFC, a protection circuit will be enabled on the dedicated pins, preventing the chip from being damaged in the presence of a strong NFC field. The GPIO function will be disabled on those pins as well.

When NFCPINS.PROTECT=Disabled, the device will not be protected against strong NFC field damages caught by a connected NFC antenna, and the NFCT peripheral will not operate as expected, as it will never leave the DISABLE state.

The pins dedicated to the NFC antenna function will have some limitation when the pins are configured for normal GPIO operation. The pin capacitance will be higher on those (refer to C_{PAD_NFC} in the *GPIO Electrical Specification* on page 151 below), and some increased leakage current between the two pins is to be expected if they are used in GPIO mode, and are driven to different logical values. To save power the two pins should always be set to the same logical value whenever entering one of the device power saving modes. Please refer to I_{NFC_LEAK} in *GPIO Electrical Specification* on page 151 for details.

42.3 EasyDMA

The NFC peripheral implements EasyDMA for reading and writing of data packets from and to the Data RAM without CPU involvement.

The NFC EasyDMA utilizes one pointer called PACKETPTR for receiving and transmitting packets.

The EasyDMA can either read or write between the NFC peripheral and the RAM, but not at the same time. The event RXFRAMESTART indicates that the EasyDMA has started writing to the RAM for a receive frame and the event RXFRAMEND indicates that the EasyDMA has completed writing to the RAM. Similarly, the event TXFRAMESTART indicates that the EasyDMA has started reading from the RAM for a transmit frame and the event TXFRAMEND indicates that the EasyDMA has completed reading from the RAM. If a transmit and a receive operation is issued at the same time, the transmit operation would be prioritized.

Starting a transmit operation while the EasyDMA has already started writing a receive frame to the RAM will result in unpredictable behavior. Starting an EasyDMA operation whilst there is an ongoing EasyDMA operation may result in unpredictable behavior. It is recommended to wait for the TXFRAMEEND or RXFRAMEND event for the respective ongoing transmit or receive before starting a new receive or transmit operation.

The MAXLEN register determines the maximum number of bytes that can be read from or written to the RAM. This feature can be used to secure that the NFC peripheral does not overwrite, or read beyond, the RAM assigned to a packet. Note that if the RXD.AMOUNT or TXD.AMOUNT register indicates longer data packets than set in MAXLEN, the frames sent to or received from the physical layer will be incomplete. In RX, the OVERRUN bit in the FRAMESTATUS.RX register will be set and an RXERROR event will be triggered in that situation.

Note that RXD.AMOUNT and TXD.AMOUNT define a frame length in bytes and bits excluding SoF, EoF and parity, but including CRC for RXD.AMOUNT only, make sure to take potential additional bits into account when setting MAXLEN.

Only sending task ENABLERXDATA ensures that a new value in PACKETPTR pointing to the RX buffer in Data RAM is taken into account.

If PACKETPTR is not pointing to the Data RAM region, an EasyDMA transfer may result in a HardFault or RAM corruption. See Chapter *Memory* on page 20 for more information about the different memory regions.

The NFC peripherals normally do alternative receive and transmit frames. So, to prepare for the next frame, the PACKETPTR, MAXLEN, TXD.FRAMECONFIG and TXD.AMOUNT can be updated while the receive is in progress, and, similarly, the PACKETPTR, MAXLEN and RXD.FRAMECONFIG can be updated while

the transmit is in progress. They can be updated and prepared for the next NFC frame immediately after the STARTED event of the current frame has been received. Updating the TXD.FRAMECONFIG and TXD.AMOUNT during the current transmit frame or updating RXD.FRAMECONFIG during current receive frame may cause unpredictable behaviour.

In accordance with *NFC Forum, NFC Digital Protocol Technical Specification*, the least a significant bit from the least significant byte is sent on air first. The bytes are stored in increasing order, starting at the lowest address in the EasyDMA buffer in RAM.

42.4 Collision resolution

The NFC peripheral implements an automatic collision resolution function as defined by the NFC Forum.

The SENSRES and SELRES registers need to be programmed upfront in order for the collision resolution to behave correctly. Depending on the NFCIDSIZE field in SENSRES, the following registers also need to be programmed upfront:

- NFCID1_LAST if NFCID1SIZE=NFCID1Single (ID = 4 bytes);
- NFCID1_2ND_LAST and NFCID1_LAST if NFCID1SIZE=NFCID1Double (ID = 7 bytes);
- NFCID1_3RD_LAST, NFCID1_2ND_LAST and NFCID1_LAST if NFCID1SIZE=NFCID1Triple (ID = 10 bytes);

Table 94: NFCID1 byte allocation (top sent first on air) on page 415 explains the position of the ID bytes in NFCID1_3RD_LAST, NFCID1_2ND_LAST and NFCID1_LAST, depending on the ID size, and as compared to the definition used in the *NFC Forum, NFC Digital Protocol Technical Specification*.

Table 94: NFCID1 byte allocation (top sent first on air)

	ID = 4 bytes	ID = 7 bytes	ID = 10 bytes
NFCID1_Q			$nfcid1_0$
NFCID1_R			$nfcid1_1$
NFCID1_S			$nfcid1_2$
NFCID1_T		$nfcid1_0$	$nfcid1_3$
NFCID1_U		$nfcid1_1$	$nfcid1_4$
NFCID1_V		$nfcid1_2$	$nfcid1_5$
NFCID1_W	$nfcid1_0$	$nfcid1_3$	$nfcid1_6$
NFCID1_X	$nfcid1_1$	$nfcid1_4$	$nfcid1_7$
NFCID1_Y	$nfcid1_2$	$nfcid1_5$	$nfcid1_8$
NFCID1_Z	$nfcid1_3$	$nfcid1_6$	$nfcid1_9$

Automatic collision resolution is enabled by default.

The hardware implementation can handle the states from IDLE to ACTIVE_A automatically as defined in the *NFC Forum, NFC Activity Technical Specification*, and the other states are to be handled by software. The software keeps track of the state through events. The collision resolution will trigger an AUTOCOLRESSTARTED event when it has started. Reaching the ACTIVE_A state is indicated by the SELECTED event.

If collision resolution fails, a COLLISION event is triggered. Note that errors occurring during automatic collision resolution may also cause ERROR and/or RXERROR events to be generated. Also, other events may get generated. It is recommended that the software ignores any event except COLLISION, SELECTED and FIELDLOST during automatic collision resolution. Software shall also make sure that any unwanted SHORT or PPI shortcut are disabled during automatic collision resolution.

A pre-defined set of registers, NFC.TAGHEADER0..3, containing a valid NFCID1 value, is available in *FICR*, and can be used by software to populate the NFCID1_3RD_LAST, NFCID1_2ND_LAST and NFCID1_LAST registers. Refer to the release notes of the NFC stack for more details on the format.

The automatic collision resolution will be restarted, if the packets are received with CRC or parity errors while in ACTIVE_A state.

The SLP_REQ is automatically handled by the NFC peripheral. However, this results in an ERROR event (with FRAMEDELAYTIMEOUT cause in ERRORSTATUS) since the SLP_REQ has no response. This error must be ignored until the SELECTED event is triggered and this error should be cleared by the software when the SELECTED event is triggered.

42.5 Frame timing controller

The NFC peripheral includes a frame timing controller that continuously keeps track of the number of the 13.56 MHz RF-carrier clock periods since the end of the EoF of the last received frame.

The NFC peripheral can be programmed to send a responding frame within a time window or at an exact count of RF carrier periods. In case of FRAMEDELAYMODE = Window a STARTTX task triggered before the frame timing controller counter is equal to FRAMEDELAYMIN will force the transmission to halt until the counter is equal to FRAMEDELAYMIN. If the counter is within FRAMEDELAYMIN and FRAMEDELAYMAX when the STARTTX task is triggered, the peripheral will start the transmission straight away. In case of FRAMEDELAYMODE = ExactVal, a STARTTX task, triggered before the frame delay counter is equal to FRAMEDELAYMAX, will halt the actual transmission start until the counter is equal to FRAMEDELAYMAX.

In case of FRAMEDELAYMODE = WindowGrid, the behaviour is similar to the FRAMEDELAYMODE = Window, but the actual transmission between FRAMEDELAYMIN and FRAMEDELAYMAX starts on a bit grid as defined for NFC-A Listen frames (slot duration of 128 RF carrier periods).

The FRAMEDELAYMIN and FRAMEDELAYMAX values shall only be updated before the STARTTX task is triggered. Failing to do so may cause unpredictable behaviour. An ERROR event (with FRAMEDELAYTIMEOUT cause in ERRORSTATUS) will be asserted if the frame timing controller counter reaches FRAMEDELAYMAX without any STARTTX task triggered. This may happen even when the response is not required as per *NFC Forum, NFC Digital Protocol Technical Specification*. Any commands handled by the automatic collision resolution that don't involve a response being generated may also result in an ERROR event (with FRAMEDELAYTIMEOUT cause in ERRORSTATUS).

The frame timing controller operation is illustrated in *Figure 118: Frame timing controller (FRAMEDELAYMODE=Window)* on page 416. The frame timing controller automatically adjusts the frame timing counter based on the last received data bit according to NFC-A technology in the *NFC Forum, NFC Digital Protocol Technical Specification*.

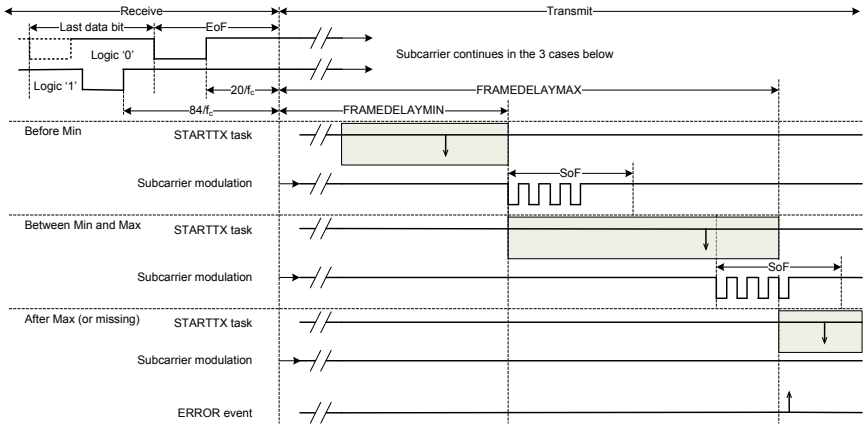

Figure 118: Frame timing controller (FRAMEDELAYMODE=Window)

42.6 Frame assembler

The NFC peripheral implements a frame assembler in hardware.

When the NFC peripheral is in the ACTIVE_A state, the software can decide to enter RX or TX mode. For RX, see *Frame disassembler* on page 417. For TX, the software must indicate the address of the source buffer in Data RAM and its size through programming the PACKETPTR and MAXCNT registers respectively, then issuing a TXSTART task.

MAXCNT must be set so that it matches the size of the frame to be sent.

The STARTED event indicates that the PACKETPTR and MAXCNT registers have been captured by the frame assembler's EasyDMA.

When asserting the STARTTX task, the frame assembler module will start reading TXD.AMOUNT.TXDATABYTES bytes (plus one additional byte if TXD.AMOUNT.TXDATABITS > 0) from the RAM position set by the PACKETPTR.

The NFC peripheral transmits the data as read from RAM, adding framing and the CRC calculated on the fly. The NFC peripheral will take (8*TXD.AMOUNT.TXDATABYTES + TXD.AMOUNT.TXDATABITS) bits and assemble a frame according to settings in TXD.FRAMECONFIG. Both short frames, standard frames and bit oriented SDD frames as specified in the *NFC Forum, NFC Digital Protocol Technical Specification* can be assembled by correct setting of the TXD.FRAMECONFIG register.

The bytes will be transmitted on air in the same order as they are read from RAM with a rising bit order within each byte (least significant bit first). That is, b0 will be transmitted on air before b1, and so on. The bits read from RAM will be coded into symbols as defined in the *NFC Forum, NFC Digital Protocol Technical Specification*.

> **Important:** Some NFC Forum documents, such as *NFC Forum, NFC Digital Protocol Technical Specification*, define bit numbering in a byte from b1 (LSB) to b8 (MSB), while most other technical documents from the NFC Forum, and also the Nordic Semiconductor documentation, traditionally numbers them from b0 to b7. The present document uses the b0 to b7 numbering scheme. Be aware of this when comparing with the *NFC Forum, NFC Digital Protocol Technical Specification* to others.

The frame assembler can be configured in TXD.FRAMECONFIG to add Start of Frame (SoF) symbol, calculate and add parity bits, and calculate and add CRC to the data read from RAM when assembling the frame. The total frame will then be longer than what is defined by TXD.AMOUNT.TXDATABYTES and TXDATABITS. DISCARDMODE will select if the first bits in the first byte read from RAM or the last bits in the last byte read from RAM will be discarded if TXD.AMOUNT.TXDATABITS are not equal to zero. Note that if TXD.FRAMECONFIG.PARITY = Parity and TXD.FRAMECONFIG.DISCARDMODE=DiscardStart, a parity bit will be included after the non-complete first byte. No parity will be added after a non-complete last byte.

The Frame Assemble operation is illustrated in *Figure 119: Frame assemble* on page 417 for different settings in TXD.FRAMECONFIG. All shaded bits fields are added by the frame assembler. Some of these bits are optional and appearances are configured in TXD.FRAMECONFIG. Please note that the frames illustrated do not necessarily comply with the NFC specification. The figure is only to illustrate the behavior of the NFC peripheral.

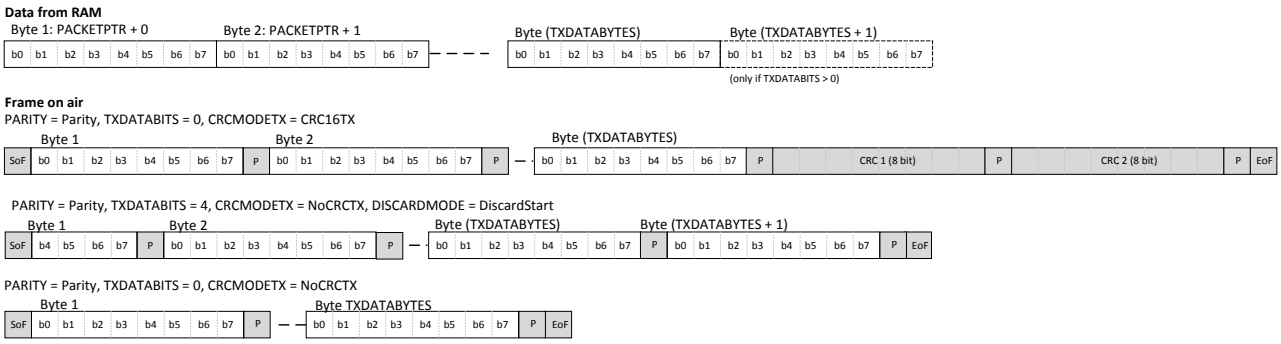

Figure 119: Frame assemble

The accurate timing for transmitting the frame on air is set using the frame timing controller settings.

42.7 Frame disassembler

The NFC peripheral implements a frame disassembler in hardware.

When the NFC peripheral is in the ACTIVE_A state, the software can decide to enter RX or TX mode. For TX, see *Frame assembler* on page 416. For RX, the software must indicate the address of the destination buffer in Data RAM and its size through programming the PACKETPTR and MAXCNT registers respectively, then issuing a ENABLERXDATA task.

The STARTED event indicates that the PACKETPTR and MAXCNT registers have been captured by the frame disassembler's EasyDMA.

When an incoming frame starts, the RXFRAMESTART event will get issued and data will be written to the buffer in Data RAM. The frame disassembler will verify and remove on the fly any parity bits and SoF and End of Frame (EoF) symbols based on RXD.FRAMECONFIG register configuration. It will, however, verify and transfer the CRC bytes into RAM, if the CRC is was enabled through RXD.FRAMECONFIG.

When an EoF symbol is detected, the NFC peripheral will assert the RXFRAMEEND event and write the RXD.AMOUNT register to indicate numbers of received bytes and bits in the data packet. The module does not interpret the content of the data received from the remote NFC device, except for SoF, EoF, parity and CRC checking, as described above. The Frame disassemble operation is illustrated in *Figure 120: Frame disassemble illustration* on page 418.

Per NFC specification, the time between end of frame to the next start of frame can be as short as 86 µs, so care must be taken that PACKETPTR and MAXCNT are ready and ENABLERXDATA is issued on time after the end of previous frame. The use of a PPI shortcut from TXFRAMEEND to ENABLERXDATA is recommended.

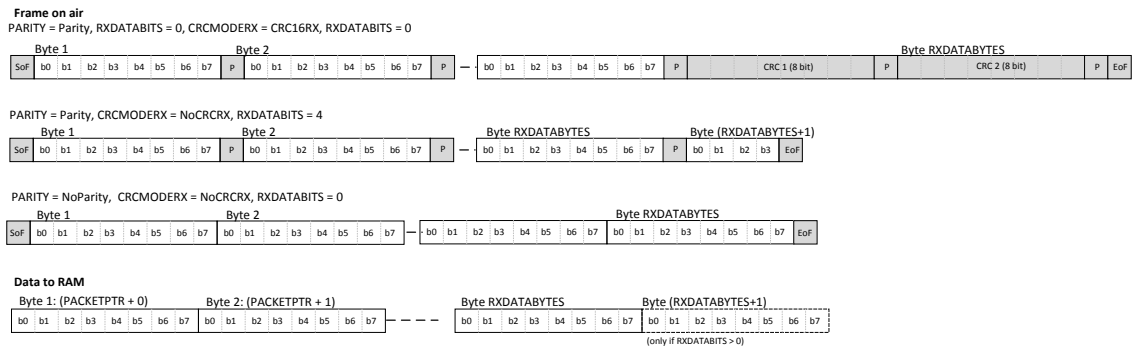

Figure 120: Frame disassemble illustration

42.8 Antenna interface

In ACTIVATED state, an amplitude regulator will adjust the voltage swing on the antenna pins to a value that is within the V_{swing} limit.

Refer to *NFCT Electrical Specification* on page 431.

42.9 NFCT antenna recommendations

The NFCT antenna coil must be connected differential between `NFC1` and `NFC2` pins of the device.

Two external capacitors should be used to tune the resonance of the antenna circuit to 13.56 MHz.

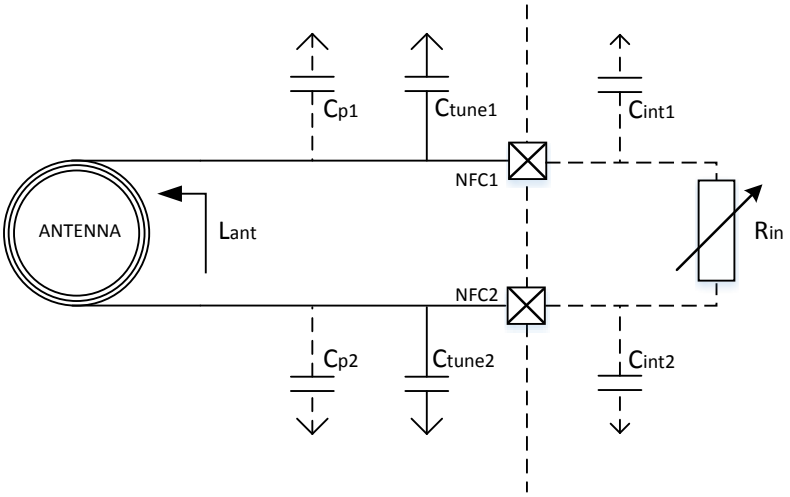

Figure 121: NFCT antenna recommendations

The required tuning capacitor value is given by the below equations:

$$C'_{tune} = \frac{1}{(2\pi \cdot 13.56\ MHz)^2 \cdot L_{ant}} \quad where\ C'_{tune} = \frac{1}{2} \cdot (C_p + C_{\text{int}} + C_{tune})$$

$$and\ C_{tune1} = C_{tune2} = C_{tune} \qquad C_{p1} = C_{p2} = C_p \qquad C_{\text{int1}} = C_{\text{int2}} = C_{\text{int}}$$

$$C_{tune} = \frac{2}{(2\pi \cdot 13.56\ MHz)^2 \cdot L_{ant}} - C_p - C_{\text{int}}$$

An antenna inductance of L_{ant} = 2 µH will give tuning capacitors in the range of 130 pF on each pin. For good performance, match the total capacitance on `NFC1` and `NFC2`.

42.10 Battery protection

If the antenna is exposed to a strong NFC field, current may flow in the opposite direction on the supply due to parasitic diodes and ESD structures.

If the battery used does not tolerate return current, a series diode must be placed between the battery and the device in order to protect the battery.

42.11 References

NFC Forum, NFC Analog Specification version 1.0, www.nfc-forum.org

NFC Forum, NFC Digital Protocol Technical Specification version 1.1, www.nfc-forum.org

NFC Forum, NFC Activity Technical Specification version 1.1, www.nfc-forum.org

42.12 Registers

Table 95: Instances

Base address	Peripheral	Instance	Description	Configuration
0x40005000	NFCT	NFCT	Near Field Communication Tag	

Table 96: Register Overview

Register	Offset	Description
TASKS_ACTIVATE	0x000	Activate NFC peripheral for incoming and outgoing frames, change state to activated
TASKS_DISABLE	0x004	Disable NFC peripheral
TASKS_SENSE	0x008	Enable NFC sense field mode, change state to sense mode
TASKS_STARTTX	0x00C	Start transmission of a outgoing frame, change state to transmit
TASKS_ENABLERXDATA	0x01C	Initializes the EasyDMA for receive.
TASKS_GOIDLE	0x024	Force state machine to IDLE state
TASKS_GOSLEEP	0x028	Force state machine to SLEEP_A state
EVENTS_READY	0x100	The NFC peripheral is ready to receive and send frames
EVENTS_FIELDDETECTED	0x104	Remote NFC field detected
EVENTS_FIELDLOST	0x108	Remote NFC field lost
EVENTS_TXFRAMESTART	0x10C	Marks the start of the first symbol of a transmitted frame
EVENTS_TXFRAMEEND	0x110	Marks the end of the last transmitted on-air symbol of a frame
EVENTS_RXFRAMESTART	0x114	Marks the end of the first symbol of a received frame
EVENTS_RXFRAMEEND	0x118	Received data have been checked (CRC, parity) and transferred to RAM, and EasyDMA has ended accessing the RX buffer
EVENTS_ERROR	0x11C	NFC error reported. The ERRORSTATUS register contains details on the source of the error.
EVENTS_RXERROR	0x128	NFC RX frame error reported. The FRAMESTATUS.RX register contains details on the source of the error.
EVENTS_ENDRX	0x12C	RX buffer (as defined by PACKETPTR and MAXLEN) in Data RAM full.
EVENTS_ENDTX	0x130	Transmission of data in RAM has ended, and EasyDMA has ended accessing the TX buffer
EVENTS_AUTOCOLRESST	0x138	Auto collision resolution process has started
EVENTS_COLLISION	0x148	NFC Auto collision resolution error reported.
EVENTS_SELECTED	0x14C	NFC Auto collision resolution successfully completed
EVENTS_STARTED	0x150	EasyDMA is ready to receive or send frames.
SHORTS	0x200	Shortcut register
INTEN	0x300	Enable or disable interrupt
INTENSET	0x304	Enable interrupt
INTENCLR	0x308	Disable interrupt
ERRORSTATUS	0x404	NFC Error Status register
FRAMESTATUS.RX	0x40C	Result of last incoming frames
CURRENTLOADCTRL	0x430	Current value driven to the NFC Load Control
FIELDPRESENT	0x43C	Indicates the presence or not of a valid field
FRAMEDELAYMIN	0x504	Minimum frame delay
FRAMEDELAYMAX	0x508	Maximum frame delay
FRAMEDELAYMODE	0x50C	Configuration register for the Frame Delay Timer
PACKETPTR	0x510	Packet pointer for TXD and RXD data storage in Data RAM
MAXLEN	0x514	Size of allocated for TXD and RXD data storage buffer in Data RAM
TXD.FRAMECONFIG	0x518	Configuration of outgoing frames
TXD.AMOUNT	0x51C	Size of outgoing frame
RXD.FRAMECONFIG	0x520	Configuration of incoming frames
RXD.AMOUNT	0x524	Size of last incoming frame
NFCID1_LAST	0x590	Last NFCID1 part (4, 7 or 10 bytes ID)
NFCID1_2ND_LAST	0x594	Second last NFCID1 part (7 or 10 bytes ID)
NFCID1_3RD_LAST	0x598	Third last NFCID1 part (10 bytes ID)
SENSRES	0x5A0	NFC-A SENS_RES auto-response settings
SELRES	0x5A4	NFC-A SEL_RES auto-response settings

42.12.1 SHORTS

Address offset: 0x200

Shortcut register

Bit number	31	30	29	28	27	26	25	24	23	22	21	20	19	18	17	16	15	14	13	12	11	10	9	8	7	6	5	4	3	2	1	0
Id																															B	A
Reset 0x00000000	**0**	**0**	**0**	**0**	**0**	**0**	**0**	**0**	**0**	**0**	**0**	**0**	**0**	**0**	**0**	**0**	**0**	**0**	**0**	**0**	**0**	**0**	**0**	**0**	**0**	**0**	**0**	**0**	**0**	**0**	**0**	**0**

Id	RW	Field	Value Id	Value	Description
A	RW	FIELDDETECTED_ACTIVATE			Shortcut between FIELDDETECTED event and ACTIVATE task See *EVENTS_FIELDDETECTED* and *TASKS_ACTIVATE*
			Disabled	0	Disable shortcut
			Enabled	1	Enable shortcut
B	RW	FIELDLOST_SENSE			Shortcut between FIELDLOST event and SENSE task See *EVENTS_FIELDLOST* and *TASKS_SENSE*
			Disabled	0	Disable shortcut
			Enabled	1	Enable shortcut

42.12.2 INTEN

Address offset: 0x300

Enable or disable interrupt

Bit number	31	30	29	28	27	26	25	24	23	22	21	20	19	18	17	16	15	14	13	12	11	10	9	8	7	6	5	4	3	2	1	0
Id												T	S	R				N		M	L	K			H	G	F	E	D	C	B	A
Reset 0x00000000	**0**	**0**	**0**	**0**	**0**	**0**	**0**	**0**	**0**	**0**	**0**	**0**	**0**	**0**	**0**	**0**	**0**	**0**	**0**	**0**	**0**	**0**	**0**	**0**	**0**	**0**	**0**	**0**	**0**	**0**	**0**	**0**

Id	RW	Field	Value Id	Value	Description
A	RW	READY			Enable or disable interrupt for READY event See *EVENTS_READY*
			Disabled	0	Disable
			Enabled	1	Enable
B	RW	FIELDDETECTED			Enable or disable interrupt for FIELDDETECTED event See *EVENTS_FIELDDETECTED*
			Disabled	0	Disable
			Enabled	1	Enable
C	RW	FIELDLOST			Enable or disable interrupt for FIELDLOST event See *EVENTS_FIELDLOST*
			Disabled	0	Disable
			Enabled	1	Enable
D	RW	TXFRAMESTART			Enable or disable interrupt for TXFRAMESTART event See *EVENTS_TXFRAMESTART*
			Disabled	0	Disable
			Enabled	1	Enable
E	RW	TXFRAMEEND			Enable or disable interrupt for TXFRAMEEND event See *EVENTS_TXFRAMEEND*
			Disabled	0	Disable
			Enabled	1	Enable
F	RW	RXFRAMESTART			Enable or disable interrupt for RXFRAMESTART event See *EVENTS_RXFRAMESTART*
			Disabled	0	Disable
			Enabled	1	Enable
G	RW	RXFRAMEEND			Enable or disable interrupt for RXFRAMEEND event See *EVENTS_RXFRAMEEND*
			Disabled	0	Disable
			Enabled	1	Enable
H	RW	ERROR			Enable or disable interrupt for ERROR event

Bit number				31	30	29	28	27	26	25	24	23	22	21	20	19	18	17	16	15	14	13	12	11	10	9	8	7	6	5	4	3	2	1	0
Id															T	S	R				N		M	L	K			H	G	F	E	D	C	B	A
Reset 0x00000000				**0**	**0**	**0**	**0**	**0**	**0**	**0**	**0**	**0**	**0**	**0**	**0**	**0**	**0**	**0**	**0**	**0**	**0**	**0**	**0**	**0**	**0**	**0**	**0**	**0**	**0**	**0**	**0**	**0**	**0**	**0**	**0**
Id	**RW**	**Field**	**Value Id**	**Value**											**Description**																						
															See *EVENTS_ERROR*																						
			Disabled	0											Disable																						
			Enabled	1											Enable																						
K	RW	RXERROR													Enable or disable interrupt for RXERROR event See *EVENTS_RXERROR*																						
			Disabled	0											Disable																						
			Enabled	1											Enable																						
L	RW	ENDRX													Enable or disable interrupt for ENDRX event See *EVENTS_ENDRX*																						
			Disabled	0											Disable																						
			Enabled	1											Enable																						
M	RW	ENDTX													Enable or disable interrupt for ENDTX event See *EVENTS_ENDTX*																						
			Disabled	0											Disable																						
			Enabled	1											Enable																						
N	RW	AUTOCOLRESSTARTED													Enable or disable interrupt for AUTOCOLRESSTARTED event See *EVENTS_AUTOCOLRESSTARTED*																						
			Disabled	0											Disable																						
			Enabled	1											Enable																						
R	RW	COLLISION													Enable or disable interrupt for COLLISION event See *EVENTS_COLLISION*																						
			Disabled	0											Disable																						
			Enabled	1											Enable																						
S	RW	SELECTED													Enable or disable interrupt for SELECTED event See *EVENTS_SELECTED*																						
			Disabled	0											Disable																						
			Enabled	1											Enable																						
T	RW	STARTED													Enable or disable interrupt for STARTED event See *EVENTS_STARTED*																						
			Disabled	0											Disable																						
			Enabled	1											Enable																						

42.12.3 INTENSET

Address offset: 0x304

Enable interrupt

Bit number				31	30	29	28	27	26	25	24	23	22	21	20	19	18	17	16	15	14	13	12	11	10	9	8	7	6	5	4	3	2	1	0
Id															T	S	R				N		M	L	K			H	G	F	E	D	C	B	A
Reset 0x00000000				**0**	**0**	**0**	**0**	**0**	**0**	**0**	**0**	**0**	**0**	**0**	**0**	**0**	**0**	**0**	**0**	**0**	**0**	**0**	**0**	**0**	**0**	**0**	**0**	**0**	**0**	**0**	**0**	**0**	**0**	**0**	**0**
Id	**RW**	**Field**	**Value Id**	**Value**											**Description**																						
A	RW	READY													Write '1' to Enable interrupt for READY event See *EVENTS_READY*																						
			Set	1											Enable																						
			Disabled	0											Read: Disabled																						
			Enabled	1											Read: Enabled																						
B	RW	FIELDDETECTED													Write '1' to Enable interrupt for FIELDDETECTED event See *EVENTS_FIELDDETECTED*																						
			Set	1											Enable																						
			Disabled	0											Read: Disabled																						
			Enabled	1											Read: Enabled																						
C	RW	FIELDLOST													Write '1' to Enable interrupt for FIELDLOST event																						

Bit number				31	30	29	28	27	26	25	24	23	22	21	20	19	18	17	16	15	14	13	12	11	10	9	8	7	6	5	4	3	2	1	0
Id															T	S	R				N		M	L	K			H	G	F	E	D	C	B	A
Reset 0x00000000				**0**	**0**	**0**	**0**	**0**	**0**	**0**	**0**	**0**	**0**	**0**	**0**	**0**	**0**	**0**	**0**	**0**	**0**	**0**	**0**	**0**	**0**	**0**	**0**	**0**	**0**	**0**	**0**	**0**	**0**	**0**	**0**
Id	**RW**	**Field**	**Value Id**	**Value**								**Description**																							
												See *EVENTS_FIELDLOST*																							
			Set	1								Enable																							
			Disabled	0								Read: Disabled																							
			Enabled	1								Read: Enabled																							
D	RW	TXFRAMESTART										Write '1' to Enable interrupt for TXFRAMESTART event																							
												See *EVENTS_TXFRAMESTART*																							
			Set	1								Enable																							
			Disabled	0								Read: Disabled																							
			Enabled	1								Read: Enabled																							
E	RW	TXFRAMEEND										Write '1' to Enable interrupt for TXFRAMEEND event																							
												See *EVENTS_TXFRAMEEND*																							
			Set	1								Enable																							
			Disabled	0								Read: Disabled																							
			Enabled	1								Read: Enabled																							
F	RW	RXFRAMESTART										Write '1' to Enable interrupt for RXFRAMESTART event																							
												See *EVENTS_RXFRAMESTART*																							
			Set	1								Enable																							
			Disabled	0								Read: Disabled																							
			Enabled	1								Read: Enabled																							
G	RW	RXFRAMEEND										Write '1' to Enable interrupt for RXFRAMEEND event																							
												See *EVENTS_RXFRAMEEND*																							
			Set	1								Enable																							
			Disabled	0								Read: Disabled																							
			Enabled	1								Read: Enabled																							
H	RW	ERROR										Write '1' to Enable interrupt for ERROR event																							
												See *EVENTS_ERROR*																							
			Set	1								Enable																							
			Disabled	0								Read: Disabled																							
			Enabled	1								Read: Enabled																							
K	RW	RXERROR										Write '1' to Enable interrupt for RXERROR event																							
												See *EVENTS_RXERROR*																							
			Set	1								Enable																							
			Disabled	0								Read: Disabled																							
			Enabled	1								Read: Enabled																							
L	RW	ENDRX										Write '1' to Enable interrupt for ENDRX event																							
												See *EVENTS_ENDRX*																							
			Set	1								Enable																							
			Disabled	0								Read: Disabled																							
			Enabled	1								Read: Enabled																							
M	RW	ENDTX										Write '1' to Enable interrupt for ENDTX event																							
												See *EVENTS_ENDTX*																							
			Set	1								Enable																							
			Disabled	0								Read: Disabled																							
			Enabled	1								Read: Enabled																							
N	RW	AUTOCOLRESSTARTED										Write '1' to Enable interrupt for AUTOCOLRESSTARTED event																							
												See *EVENTS_AUTOCOLRESSTARTED*																							
			Set	1								Enable																							
			Disabled	0								Read: Disabled																							
			Enabled	1								Read: Enabled																							
R	RW	COLLISION										Write '1' to Enable interrupt for COLLISION event																							
												See *EVENTS_COLLISION*																							

Bit number				31	30	29	28	27	26	25	24	23	22	21	20	19	18	17	16	15	14	13	12	11	10	9	8	7	6	5	4	3	2	1	0
Id															T	S	R				N		M	L	K			H	G	F	E	D	C	B	A
Reset 0x00000000				**0**	**0**	**0**	**0**	**0**	**0**	**0**	**0**	**0**	**0**	**0**	**0**	**0**	**0**	**0**	**0**	**0**	**0**	**0**	**0**	**0**	**0**	**0**	**0**	**0**	**0**	**0**	**0**	**0**	**0**	**0**	**0**
Id	**RW**	**Field**	**Value Id**	**Value**											**Description**																						
			Set	1											Enable																				
			Disabled	0											Read: Disabled																				
			Enabled	1											Read: Enabled																				
S	RW	SELECTED													Write '1' to Enable interrupt for SELECTED event See *EVENTS_SELECTED*																				
			Set	1											Enable																				
			Disabled	0											Read: Disabled																				
			Enabled	1											Read: Enabled																				
T	RW	STARTED													Write '1' to Enable interrupt for STARTED event See *EVENTS_STARTED*																				
			Set	1											Enable																				
			Disabled	0											Read: Disabled																				
			Enabled	1											Read: Enabled																				

42.12.4 INTENCLR

Address offset: 0x308

Disable interrupt

Bit number				31	30	29	28	27	26	25	24	23	22	21	20	19	18	17	16	15	14	13	12	11	10	9	8	7	6	5	4	3	2	1	0
Id															T	S	R				N		M	L	K			H	G	F	E	D	C	B	A
Reset 0x00000000				**0**	**0**	**0**	**0**	**0**	**0**	**0**	**0**	**0**	**0**	**0**	**0**	**0**	**0**	**0**	**0**	**0**	**0**	**0**	**0**	**0**	**0**	**0**	**0**	**0**	**0**	**0**	**0**	**0**	**0**	**0**	**0**
Id	**RW**	**Field**	**Value Id**	**Value**											**Description**																						
A	RW	READY													Write '1' to Disable interrupt for READY event See *EVENTS_READY*																				
			Clear	1											Disable																				
			Disabled	0											Read: Disabled																				
			Enabled	1											Read: Enabled																				
B	RW	FIELDDETECTED													Write '1' to Disable interrupt for FIELDDETECTED event See *EVENTS_FIELDDETECTED*																				
			Clear	1											Disable																				
			Disabled	0											Read: Disabled																				
			Enabled	1											Read: Enabled																				
C	RW	FIELDLOST													Write '1' to Disable interrupt for FIELDLOST event See *EVENTS_FIELDLOST*																				
			Clear	1											Disable																				
			Disabled	0											Read: Disabled																				
			Enabled	1											Read: Enabled																				
D	RW	TXFRAMESTART													Write '1' to Disable interrupt for TXFRAMESTART event See *EVENTS_TXFRAMESTART*																				
			Clear	1											Disable																				
			Disabled	0											Read: Disabled																				
			Enabled	1											Read: Enabled																				
E	RW	TXFRAMEEND													Write '1' to Disable interrupt for TXFRAMEEND event See *EVENTS_TXFRAMEEND*																				
			Clear	1											Disable																				
			Disabled	0											Read: Disabled																				
			Enabled	1											Read: Enabled																				
F	RW	RXFRAMESTART													Write '1' to Disable interrupt for RXFRAMESTART event See *EVENTS_RXFRAMESTART*																				
			Clear	1											Disable																				
			Disabled	0											Read: Disabled																				

Bit number				31	30	29	28	27	26	25	24	23	22	21	20	19	18	17	16	15	14	13	12	11	10	9	8	7	6	5	4	3	2	1	0
Id															T	S	R				N		M	L	K			H	G	F	E	D	C	B	A
Reset 0x00000000				**0**	**0**	**0**	**0**	**0**	**0**	**0**	**0**	**0**	**0**	**0**	**0**	**0**	**0**	**0**	**0**	**0**	**0**	**0**	**0**	**0**	**0**	**0**	**0**	**0**	**0**	**0**	**0**	**0**	**0**	**0**	**0**
Id	**RW**	**Field**	**Value Id**	**Value**											**Description**																						
			Enabled	1											Read: Enabled																				
G	RW	RXFRAMEEND													Write '1' to Disable interrupt for RXFRAMEEND event See *EVENTS_RXFRAMEEND*																				
			Clear	1											Disable																				
			Disabled	0											Read: Disabled																				
			Enabled	1											Read: Enabled																				
H	RW	ERROR													Write '1' to Disable interrupt for ERROR event See *EVENTS_ERROR*																				
			Clear	1											Disable																				
			Disabled	0											Read: Disabled																				
			Enabled	1											Read: Enabled																				
K	RW	RXERROR													Write '1' to Disable interrupt for RXERROR event See *EVENTS_RXERROR*																				
			Clear	1											Disable																				
			Disabled	0											Read: Disabled																				
			Enabled	1											Read: Enabled																				
L	RW	ENDRX													Write '1' to Disable interrupt for ENDRX event See *EVENTS_ENDRX*																				
			Clear	1											Disable																				
			Disabled	0											Read: Disabled																				
			Enabled	1											Read: Enabled																				
M	RW	ENDTX													Write '1' to Disable interrupt for ENDTX event See *EVENTS_ENDTX*																				
			Clear	1											Disable																				
			Disabled	0											Read: Disabled																				
			Enabled	1											Read: Enabled																				
N	RW	AUTOCOLRESSTARTED													Write '1' to Disable interrupt for AUTOCOLRESSTARTED event See *EVENTS_AUTOCOLRESSTARTED*																				
			Clear	1											Disable																				
			Disabled	0											Read: Disabled																				
			Enabled	1											Read: Enabled																				
R	RW	COLLISION													Write '1' to Disable interrupt for COLLISION event See *EVENTS_COLLISION*																				
			Clear	1											Disable																				
			Disabled	0											Read: Disabled																				
			Enabled	1											Read: Enabled																				
S	RW	SELECTED													Write '1' to Disable interrupt for SELECTED event See *EVENTS_SELECTED*																				
			Clear	1											Disable																				
			Disabled	0											Read: Disabled																				
			Enabled	1											Read: Enabled																				
T	RW	STARTED													Write '1' to Disable interrupt for STARTED event See *EVENTS_STARTED*																				
			Clear	1											Disable																				
			Disabled	0											Read: Disabled																				
			Enabled	1											Read: Enabled																				

42.12.5 ERRORSTATUS

Address offset: 0x404

NFC Error Status register

Write a bit to '1' to clear it. Writing '0' has no effect.

Bit number	31	30	29	28	27	26	25	24	23	22	21	20	19	18	17	16	15	14	13	12	11	10	9	8	7	6	5	4	3	2	1	0
Id																													D	C		A
Reset 0x00000000	**0**	**0**	**0**	**0**	**0**	**0**	**0**	**0**	**0**	**0**	**0**	**0**	**0**	**0**	**0**	**0**	**0**	**0**	**0**	**0**	**0**	**0**	**0**	**0**	**0**	**0**	**0**	**0**	**0**	**0**	**0**	**0**

Id	RW	Field	Value Id	Value	Description
A	RW	FRAMEDELAYTIMEOUT			No STARTTX task triggered before expiration of the time set in FRAMEDELAYMAX
C	RW	NFCFIELDTOOSTRONG			Field level is too high at max load resistance
D	RW	NFCFIELDTOOWEAK			Field level is too low at min load resistance

42.12.6 FRAMESTATUS.RX

Address offset: 0x40C

Result of last incoming frames

Write a bit to '1' to clear it. Writing '0' has no effect.

Bit number	31	30	29	28	27	26	25	24	23	22	21	20	19	18	17	16	15	14	13	12	11	10	9	8	7	6	5	4	3	2	1	0
Id																													C	B		A
Reset 0x00000000	**0**	**0**	**0**	**0**	**0**	**0**	**0**	**0**	**0**	**0**	**0**	**0**	**0**	**0**	**0**	**0**	**0**	**0**	**0**	**0**	**0**	**0**	**0**	**0**	**0**	**0**	**0**	**0**	**0**	**0**	**0**	**0**

Id	RW	Field	Value Id	Value	Description
A	RW	CRCERROR			No valid End of Frame detected
			CRCCorrect	0	Valid CRC detected
			CRCError	1	CRC received does not match local check
B	RW	PARITYSTATUS			Parity status of received frame
			ParityOK	0	Frame received with parity OK
			ParityError	1	Frame received with parity error
C	RW	OVERRUN			Overrun detected
			NoOverrun	0	No overrun detected
			Overrun	1	Overrun error

42.12.7 CURRENTLOADCTRL

Address offset: 0x430

Current value driven to the NFC Load Control

Bit number	31	30	29	28	27	26	25	24	23	22	21	20	19	18	17	16	15	14	13	12	11	10	9	8	7	6	5	4	3	2	1	0
Id																											A	A	A	A	A	A
Reset 0x00000000	**0**	**0**	**0**	**0**	**0**	**0**	**0**	**0**	**0**	**0**	**0**	**0**	**0**	**0**	**0**	**0**	**0**	**0**	**0**	**0**	**0**	**0**	**0**	**0**	**0**	**0**	**0**	**0**	**0**	**0**	**0**	**0**

Id	RW	Field	Value Id	Value	Description
A	R	CURRENTLOADCTRL			Current value driven to the NFC Load Control

42.12.8 FIELDPRESENT

Address offset: 0x43C

Indicates the presence or not of a valid field

Bit number	31	30	29	28	27	26	25	24	23	22	21	20	19	18	17	16	15	14	13	12	11	10	9	8	7	6	5	4	3	2	1	0
Id																															B	A
Reset 0x00000000	**0**	**0**	**0**	**0**	**0**	**0**	**0**	**0**	**0**	**0**	**0**	**0**	**0**	**0**	**0**	**0**	**0**	**0**	**0**	**0**	**0**	**0**	**0**	**0**	**0**	**0**	**0**	**0**	**0**	**0**	**0**	**0**

Id	RW	Field	Value Id	Value	Description
A	R	FIELDPRESENT			Indicates the presence or not of a valid field. Available only in the activated state.
			NoField	0	No valid field detected
			FieldPresent	1	Valid field detected
B	R	LOCKDETECT			Indicates if the low level has locked to the field
			NotLocked	0	Not locked to field
			Locked	1	Locked to field

42.12.9 FRAMEDELAYMIN

Address offset: 0x504

Minimum frame delay

Bit number	31	30	29	28	27	26	25	24	23	22	21	20	19	18	17	16	15	14	13	12	11	10	9	8	7	6	5	4	3	2	1	0
Id																	A	A	A	A	A	A	A	A	A	A	A	A	A	A	A	A
Reset 0x00000480	**0**	**0**	**0**	**0**	**0**	**0**	**0**	**0**	**0**	**0**	**0**	**0**	**0**	**0**	**0**	**0**	**0**	**0**	**0**	**0**	**0**	**1**	**0**	**0**	**1**	**0**	**0**	**0**	**0**	**0**	**0**	**0**

Id	RW	Field	Value Id	Value	Description
A	RW	FRAMEDELAYMIN			Minimum frame delay in number of 13.56 MHz clocks

42.12.10 FRAMEDELAYMAX

Address offset: 0x508

Maximum frame delay

Bit number	31	30	29	28	27	26	25	24	23	22	21	20	19	18	17	16	15	14	13	12	11	10	9	8	7	6	5	4	3	2	1	0
Id																	A	A	A	A	A	A	A	A	A	A	A	A	A	A	A	A
Reset 0x00001000	**0**	**0**	**0**	**0**	**0**	**0**	**0**	**0**	**0**	**0**	**0**	**0**	**0**	**0**	**0**	**0**	**0**	**0**	**0**	**1**	**0**	**0**	**0**	**0**	**0**	**0**	**0**	**0**	**0**	**0**	**0**	**0**

Id	RW	Field	Value Id	Value	Description
A	RW	FRAMEDELAYMAX			Maximum frame delay in number of 13.56 MHz clocks

42.12.11 FRAMEDELAYMODE

Address offset: 0x50C

Configuration register for the Frame Delay Timer

Bit number	31	30	29	28	27	26	25	24	23	22	21	20	19	18	17	16	15	14	13	12	11	10	9	8	7	6	5	4	3	2	1	0
Id																															A	A
Reset 0x00000001	**0**	**0**	**0**	**0**	**0**	**0**	**0**	**0**	**0**	**0**	**0**	**0**	**0**	**0**	**0**	**0**	**0**	**0**	**0**	**0**	**0**	**0**	**0**	**0**	**0**	**0**	**0**	**0**	**0**	**0**	**0**	**1**

Id	RW	Field	Value Id	Value	Description
A	RW	FRAMEDELAYMODE			Configuration register for the Frame Delay Timer
			FreeRun	0	Transmission is independent of frame timer and will start when the STARTTX task is triggered. No timeout.
			Window	1	Frame is transmitted between FRAMEDELAYMIN and FRAMEDELAYMAX
			ExactVal	2	Frame is transmitted exactly at FRAMEDELAYMAX
			WindowGrid	3	Frame is transmitted on a bit grid between FRAMEDELAYMIN and FRAMEDELAYMAX

42.12.12 PACKETPTR

Address offset: 0x510

Packet pointer for TXD and RXD data storage in Data RAM

Bit number	31	30	29	28	27	26	25	24	23	22	21	20	19	18	17	16	15	14	13	12	11	10	9	8	7	6	5	4	3	2	1	0
Id	A	A	A	A	A	A	A	A	A	A	A	A	A	A	A	A	A	A	A	A	A	A	A	A	A	A	A	A	A	A	A	A
Reset 0x00000000	**0**	**0**	**0**	**0**	**0**	**0**	**0**	**0**	**0**	**0**	**0**	**0**	**0**	**0**	**0**	**0**	**0**	**0**	**0**	**0**	**0**	**0**	**0**	**0**	**0**	**0**	**0**	**0**	**0**	**0**	**0**	**0**

Id	RW	Field	Value Id	Value	Description
A	RW	PTR			Packet pointer for TXD and RXD data storage in Data RAM. This address is a byte aligned RAM address.

42.12.13 MAXLEN

Address offset: 0x514

Size of allocated for TXD and RXD data storage buffer in Data RAM

Bit number				31	30	29	28	27	26	25	24	23	22	21	20	19	18	17	16	15	14	13	12	11	10	9	8	7	6	5	4	3	2	1	0
Id																											A	A	A	A	A	A	A	A	A
Reset 0x00000000				**0**	**0**	**0**	**0**	**0**	**0**	**0**	**0**	**0**	**0**	**0**	**0**	**0**	**0**	**0**	**0**	**0**	**0**	**0**	**0**	**0**	**0**	**0**	**0**	**0**	**0**	**0**	**0**	**0**	**0**	**0**	**0**
Id	**RW**	**Field**	**Value Id**	**Value**																															
A	RW	MAXLEN		[0..257]																															

Size of allocated for TXD and RXD data storage buffer in Data RAM

42.12.14 TXD.FRAMECONFIG

Address offset: 0x518

Configuration of outgoing frames

Bit number				31	30	29	28	27	26	25	24	23	22	21	20	19	18	17	16	15	14	13	12	11	10	9	8	7	6	5	4	3	2	1	0
Id																															D		C	B	A
Reset 0x00000017				**0**	**0**	**0**	**0**	**0**	**0**	**0**	**0**	**0**	**0**	**0**	**0**	**0**	**0**	**0**	**0**	**0**	**0**	**0**	**0**	**0**	**0**	**0**	**0**	**0**	**0**	**0**	**1**	**0**	**1**	**1**	**1**
Id	**RW**	**Field**	**Value Id**	**Value**																															
A	RW	PARITY																																	
			NoParity	0																															
			Parity	1																															
B	RW	DISCARDMODE																																	
			DiscardEnd	0																															
			DiscardStart	1																															
C	RW	SOF																																	
			NoSoF	0																															
			SoF	1																															
D	RW	CRCMODETX																																	
			NoCRCTX	0																															
			CRC16TX	1																															

CRC mode for outgoing frames

CRC is not added to the frame

16 bit CRC added to the frame based on all the data read from RAM that is used in the frame

42.12.15 TXD.AMOUNT

Address offset: 0x51C

Size of outgoing frame

Bit number				31	30	29	28	27	26	25	24	23	22	21	20	19	18	17	16	15	14	13	12	11	10	9	8	7	6	5	4	3	2	1	0
Id																								B	B	B	B	B	B	B	B	B	A	A	A
Reset 0x00000000				**0**	**0**	**0**	**0**	**0**	**0**	**0**	**0**	**0**	**0**	**0**	**0**	**0**	**0**	**0**	**0**	**0**	**0**	**0**	**0**	**0**	**0**	**0**	**0**	**0**	**0**	**0**	**0**	**0**	**0**	**0**	**0**
Id	**RW**	**Field**	**Value Id**	**Value**																															
A	RW	TXDATABITS		[0..7]																															

Number of bits in the last or first byte read from RAM that shall be included in the frame (excluding parity bit).

The DISCARDMODE field in FRAMECONFIG.TX selects if unused bits is discarded at the start or at the end of a frame. A value of 0 data bytes and 0 data bits is invalid.

B	RW	TXDATABYTES		[0..257]	

Number of complete bytes that shall be included in the frame, excluding CRC, parity and framing

42.12.16 RXD.FRAMECONFIG

Address offset: 0x520

Configuration of incoming frames

Bit number				31	30	29	28	27	26	25	24	23	22	21	20	19	18	17	16	15	14	13	12	11	10	9	8	7	6	5	4	3	2	1	0
Id																															C		B		A
Reset 0x00000015				**0**	**0**	**0**	**0**	**0**	**0**	**0**	**0**	**0**	**0**	**0**	**0**	**0**	**0**	**0**	**0**	**0**	**0**	**0**	**0**	**0**	**0**	**0**	**0**	**0**	**0**	**0**	**1**	**0**	**1**	**0**	**1**
Id	**RW**	**Field**	**Value Id**	**Value**																															
A	RW	PARITY																																	
			NoParity	0																															
			Parity	1																															

Parity expected or not in RX frame

Parity is not expected in RX frames

Parity is expected in RX frames

Bit number				31	30	29	28	27	26	25	24	23	22	21	20	19	18	17	16	15	14	13	12	11	10	9	8	7	6	5	4	3	2	1	0
Id																															C		B		A
Reset 0x00000015				**0**	**0**	**0**	**0**	**0**	**0**	**0**	**0**	**0**	**0**	**0**	**0**	**0**	**0**	**0**	**0**	**0**	**0**	**0**	**0**	**0**	**0**	**0**	**0**	**0**	**0**	**0**	**1**	**0**	**1**	**0**	**1**
Id	**RW**	**Field**	**Value Id**	**Value**								**Description**																							
B	RW	SOF										SoF expected or not in RX frames																							
			NoSoF	0								Start of Frame symbol is not expected in RX frames																							
			SoF	1								Start of Frame symbol is expected in RX frames																							
C	RW	CRCMODERX										CRC mode for incoming frames																							
			NoCRCRX	0								CRC is not expected in RX frames																							
			CRC16RX	1								Last 16 bits in RX frame is CRC, CRC is checked and CRCSTATUS updated																							

42.12.17 RXD.AMOUNT

Address offset: 0x524

Size of last incoming frame

Bit number				31	30	29	28	27	26	25	24	23	22	21	20	19	18	17	16	15	14	13	12	11	10	9	8	7	6	5	4	3	2	1	0
Id																								B	B	B	B	B	B	B	B	B	A	A	A
Reset 0x00000000				**0**	**0**	**0**	**0**	**0**	**0**	**0**	**0**	**0**	**0**	**0**	**0**	**0**	**0**	**0**	**0**	**0**	**0**	**0**	**0**	**0**	**0**	**0**	**0**	**0**	**0**	**0**	**0**	**0**	**0**	**0**	**0**
Id	**RW**	**Field**	**Value Id**	**Value**								**Description**																							
A	R	RXDATABITS										Number of bits in the last byte in the frame, if less than 8 (including CRC, but excluding parity and SoF/EoF framing). Frames with 0 data bytes and less than 7 data bits are invalid and are not received properly.																											
B	R	RXDATABYTES										Number of complete bytes received in the frame (including CRC, but excluding parity and SoF/EoF framing)																							

42.12.18 NFCID1_LAST

Address offset: 0x590

Last NFCID1 part (4, 7 or 10 bytes ID)

Bit number				31	30	29	28	27	26	25	24	23	22	21	20	19	18	17	16	15	14	13	12	11	10	9	8	7	6	5	4	3	2	1	0
Id				D	D	D	D	D	D	D	D	C	C	C	C	C	C	C	C	B	B	B	B	B	B	B	B	A	A	A	A	A	A	A	A
Reset 0x00006363				**0**	**0**	**0**	**0**	**0**	**0**	**0**	**0**	**0**	**0**	**0**	**0**	**0**	**0**	**0**	**0**	**0**	**1**	**1**	**0**	**0**	**0**	**1**	**1**	**0**	**1**	**1**	**0**	**0**	**0**	**1**	**1**
Id	**RW**	**Field**	**Value Id**	**Value**								**Description**																							
A	RW	NFCID1_Z										NFCID1 byte Z (very last byte sent)																							
B	RW	NFCID1_Y										NFCID1 byte Y																							
C	RW	NFCID1_X										NFCID1 byte X																							
D	RW	NFCID1_W										NFCID1 byte W																							

42.12.19 NFCID1_2ND_LAST

Address offset: 0x594

Second last NFCID1 part (7 or 10 bytes ID)

Bit number				31	30	29	28	27	26	25	24	23	22	21	20	19	18	17	16	15	14	13	12	11	10	9	8	7	6	5	4	3	2	1	0
Id												C	C	C	C	C	C	C	C	B	B	B	B	B	B	B	B	A	A	A	A	A	A	A	A
Reset 0x00000000				**0**	**0**	**0**	**0**	**0**	**0**	**0**	**0**	**0**	**0**	**0**	**0**	**0**	**0**	**0**	**0**	**0**	**0**	**0**	**0**	**0**	**0**	**0**	**0**	**0**	**0**	**0**	**0**	**0**	**0**	**0**	**0**
Id	**RW**	**Field**	**Value Id**	**Value**								**Description**																							
A	RW	NFCID1_V										NFCID1 byte V																							
B	RW	NFCID1_U										NFCID1 byte U																							
C	RW	NFCID1_T										NFCID1 byte T																							

42.12.20 NFCID1_3RD_LAST

Address offset: 0x598

Third last NFCID1 part (10 bytes ID)

Bit number				31	30	29	28	27	26	25	24	23	22	21	20	19	18	17	16	15	14	13	12	11	10	9	8	7	6	5	4	3	2	1	0
Id												C	C	C	C	C	C	C	C	B	B	B	B	B	B	B	B	A	A	A	A	A	A	A	A
Reset 0x00000000				**0**	**0**	**0**	**0**	**0**	**0**	**0**	**0**	**0**	**0**	**0**	**0**	**0**	**0**	**0**	**0**	**0**	**0**	**0**	**0**	**0**	**0**	**0**	**0**	**0**	**0**	**0**	**0**	**0**	**0**	**0**	**0**
Id	**RW**	**Field**	**Value Id**	**Value**								**Description**																							
A	RW	NFCID1_S										NFCID1 byte S																							
B	RW	NFCID1_R										NFCID1 byte R																							
C	RW	NFCID1_Q										NFCID1 byte Q																							

42.12.21 SENSRES

Address offset: 0x5A0

NFC-A SENS_RES auto-response settings

Bit number				31	30	29	28	27	26	25	24	23	22	21	20	19	18	17	16	15	14	13	12	11	10	9	8	7	6	5	4	3	2	1	0
Id																				E	E	E	E	D	D	D	D	C	C	B	A	A	A	A	A
Reset 0x00000001				**0**	**0**	**0**	**0**	**0**	**0**	**0**	**0**	**0**	**0**	**0**	**0**	**0**	**0**	**0**	**0**	**0**	**0**	**0**	**0**	**0**	**0**	**0**	**0**	**0**	**0**	**0**	**0**	**0**	**0**	**0**	**1**
Id	**RW**	**Field**	**Value Id**	**Value**								**Description**																							
A	RW	BITFRAMESDD										Bit frame SDD as defined by the b5:b1 of byte 1 in SENS_RES response in the NFC Forum, NFC Digital Protocol Technical Specification																							
			SDD00000	0								SDD pattern 00000																							
			SDD00001	1								SDD pattern 00001																							
			SDD00010	2								SDD pattern 00010																							
			SDD00100	4								SDD pattern 00100																							
			SDD01000	8								SDD pattern 01000																							
			SDD10000	16								SDD pattern 10000																							
B	RW	RFU5										Reserved for future use. Shall be 0.																							
C	RW	NFCIDSIZE										NFCID1 size. This value is used by the Auto collision resolution engine.																							
			NFCID1Single	0								NFCID1 size: single (4 bytes)																							
			NFCID1Double	1								NFCID1 size: double (7 bytes)																							
			NFCID1Triple	2								NFCID1 size: triple (10 bytes)																							
D	RW	PLATFCONFIG										Tag platform configuration as defined by the b4:b1 of byte 2 in SENS_RES response in the NFC Forum, NFC Digital Protocol Technical Specification																							
E	RW	RFU74										Reserved for future use. Shall be 0.																							

42.12.22 SELRES

Address offset: 0x5A4

NFC-A SEL_RES auto-response settings

Bit number				31	30	29	28	27	26	25	24	23	22	21	20	19	18	17	16	15	14	13	12	11	10	9	8	7	6	5	4	3	2	1	0
Id																												E	D	D	C	C	B	A	A
Reset 0x00000000				**0**	**0**	**0**	**0**	**0**	**0**	**0**	**0**	**0**	**0**	**0**	**0**	**0**	**0**	**0**	**0**	**0**	**0**	**0**	**0**	**0**	**0**	**0**	**0**	**0**	**0**	**0**	**0**	**0**	**0**	**0**	**0**
Id	**RW**	**Field**	**Value Id**	**Value**								**Description**																							
A	RW	RFU10										Reserved for future use. Shall be 0.																							
B	RW	CASCADE										Cascade bit (controlled by hardware, write has no effect)																							
			Complete	0								NFCID1 complete																							
			NotComplete	1								NFCID1 not complete																							
C	RW	RFU43										Reserved for future use. Shall be 0.																							
D	RW	PROTOCOL										Protocol as defined by the b7:b6 of SEL_RES response in the NFC Forum, NFC Digital Protocol Technical Specification																							
E	RW	RFU7										Reserved for future use. Shall be 0.																							

42.13 Electrical Specification

42.13.1 NFCT Electrical Specification

Symbol	Description	Min.	Typ.	Max.	Units
f_c	Frequency of operation		13.56		MHz
C_{MI}	Carrier modulation index	95			%
DR	Data Rate		106		kbps
f_s	Modulation sub-carrier frequency		$f_c/16$		MHz
V_{swing}	Peak differential Input voltage swing on NFC1 and NFC2			VDD	Vp
V_{sense}	Peak differential Field detect threshold level on NFC1-NFC2[35]		1.0		Vp
I_{sense}	Current in SENSE STATE[36]		700		nA
R_{in_min}	Minimum input resistance when regulating voltage swing			40	Ω
R_{in_max}	Maximum input resistance when regulating voltage swing	1.0			kΩ
$R_{in\_loadmod}$	Input resistance when load modulating	8		22	Ω
I_{max}	Maximum input current on NFC pins			80	mA

42.13.2 NFCT Timing Parameters

Symbol	Description	Min.	Typ.	Max.	Units
$t_{activate}$	Time from task_ACTIVATE in SENSE or DISABLE state to ACTIVATE_A or IDLE state[37]			500	us
t_{sense}	Time from remote field is present in SENSE mode to FIELDDETECTED event is asserted			20	us

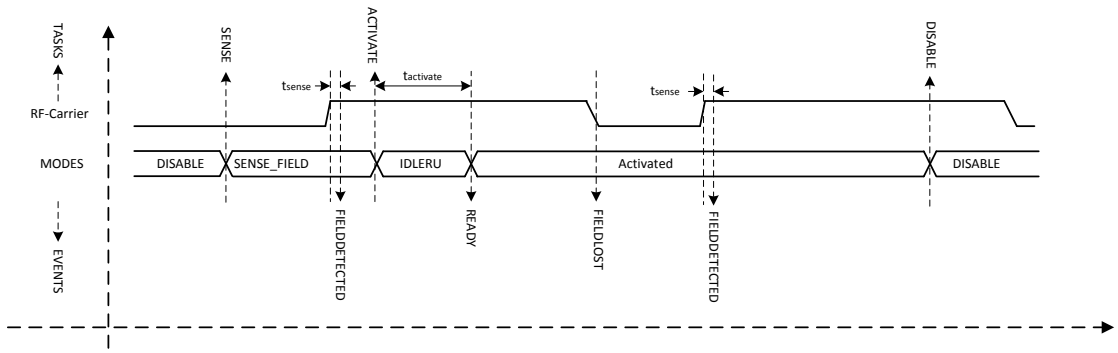

Figure 122: NFCT timing parameters (Shortcuts for FIELDDETECTED and FIELDLOST are disabled)

35 Input is high impedance in sense mode

36 This is whole device current when the device is in system off, 0K RAM retained and the NFC peripheral is in sense mode.

37 Does not account for voltage supply and oscillator startup times

43 PDM — Pulse density modulation interface

The pulse density modulation (PDM) module enables input of pulse density modulated signals from external audio frontends, for example, digital microphones. The PDM module generates the PDM clock and supports single-channel or dual-channel (Left and Right) data input. Data is transferred directly to RAM buffers using EasyDMA.

Listed here are the main features for PDM:

- Up to two PDM microphones configured as a Left/Right pair using the same data input
- 16 kHz output sample rate, 16-bit samples
- EasyDMA support for sample buffering
- HW decimation filters

The PDM module illustrated in *Figure 123: PDM module* on page 432 is interfacing up to two digital microphones with the PDM interface. It implements EasyDMA, which relieves real-time requirements associated with controlling the PDM slave from a low priority CPU execution context. It also includes all the necessary digital filter elements to produce PCM samples. The PDM module allows continuous audio streaming.

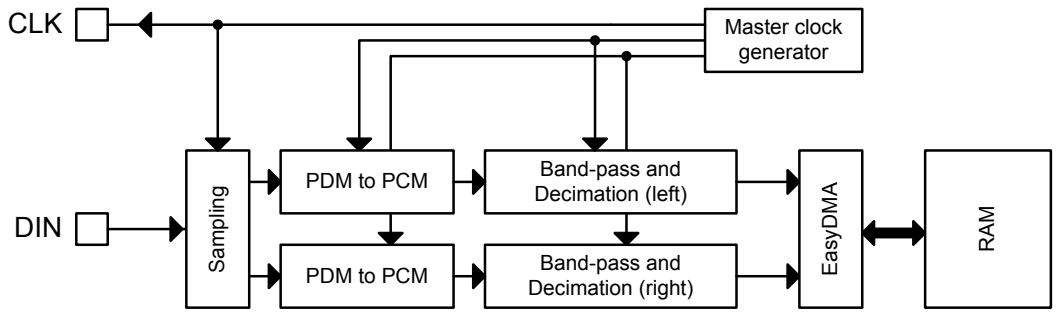

Figure 123: PDM module

43.1 Master clock generator

The FREQ field in the master clock's PDMCLKCTRL register allows adjusting the PDM clock's frequency.

The master clock generator does not add any jitter to the HFCLK source chosen. It is recommended (but not mandatory) to use the Xtal as HFCLK source.

43.2 Module operation

By default, bits from the left PDM microphone are sampled on PDM_CLK falling edge, bits for the right are sampled on the rising edge of PDM_CLK, resulting in two bitstreams. Each bitstream is fed into a digital filter which converts the PDM stream into 16-bit PCM samples, and filters and down-samples them to reach the appropriate sample rate.

The EDGE field in the MODE register allows swapping Left and Right, so that Left will be sampled on rising edge, and Right on falling.

The PDM module uses EasyDMA to store the samples coming out from the filters into one buffer in RAM.

Depending on the mode chosen in the OPERATION field in the MODE register, memory either contains alternating left and right 16-bit samples (Stereo), or only left 16-bit samples (Mono).

To ensure continuous PDM sampling, it is up to the application to update the EasyDMA destination address pointer as the previous buffer is filled.

The continuous transfer can be started or stopped by sending the START and STOP tasks. STOP becomes effective after the current frame has finished transferring, which will generate the STOPPED event. The

STOPPED event indicates that all activity in the module are finished, and that the data is available in RAM (EasyDMA has finished transferring as well). Attempting to restart before receiving the STOPPED event may result in unpredictable behaviour.

43.3 Decimation filter

In order to convert the incoming data stream into PCM audio samples, a decimation filter is included in the PDM interface module.

The input of the filter is the two-channel PDM serial stream (with left channel on clock high, right channel on clock low), its output is 2 × 16-bit PCM samples at a sample rate 64 times lower than the PDM clock rate.

The filter stage of each channel is followed by a digital volume control, to attenuate or amplify the output samples in a range of -20 dB to +20 dB around the default (reset) setting, defined by $G_{PDM,default}$. The gain is controlled by the GAINL and GAINR registers.

As an example, if the goal is to achieve 2500 RMS output samples (16 bit) with a 1 kHz 90 dBA signal into a -26 dBFS sensitivity PDM microphone, the user will have to sum the PDM module's default gain ($G_{PDM,default}$) and the gain introduced by the microphone and acoustic path of his implementation (an attenuation would translate into a negative gain), and adjust GAINL and GAINR by this amount. Assuming that only the PDM module influences the gain, GAINL and GAINR must be set to $-G_{PDM,default}$ dB to achieve the requirement.

With $G_{PDM,default}$=3.2 dB, and as GAINL and GAINR are expressed in 0.5 dB steps, the closest value to program would be 3.0 dB, which can be calculated as:

```
GAINL = GAINR = (DefaultGain - (2 * 3))
```

Remember to check that the resulting values programmed into GAINL and GAINR fall within MinGain and MaxGain.

43.4 EasyDMA

Samples will be written directly to RAM, and EasyDMA must be configured accordingly.

The address pointer for the EasyDMA channel is set in SAMPLE.PTR register. If the destination address set in SAMPLE.PTR is not pointing to the Data RAM region, an EasyDMA transfer may result in a HardFault or RAM corruption. See *Memory* on page 20 for more information about the different memory regions.

DMA supports Stereo (Left+Right 16-bit samples) and Mono (Left only) data transfer, depending on setting in the OPERATION field in the MODE register. The samples are stored little endian.

Table 97: DMA sample storage

MODE.OPERATION	Bits per sample	Result stored per RAM word	Physical RAM allocated (32 bit words)	Result boundary indexes in RAM	Note
Stereo	32 (2x16)	L+R	ceil(SAMPLE.MAXCNT/2)	R0=[31:16]; L0=[15:0]	Default
Mono	16	2xL	ceil(SAMPLE.MAXCNT/2)	L1=[31:16]; L0=[15:0]	

The destination buffer in RAM consists of one block, the size of which is set in SAMPLE.MAXCNT register. Format is number of 16-bit samples. The physical RAM allocated is always:

```
(RAM allocation, in bytes) = SAMPLE.MAXCNT * 2;
```

(but the mapping of the samples depends on MODE.OPERATION.

If OPERATION=Stereo, RAM will contain a succession of Left and Right samples.

If OPERATION=Mono, RAM will contain a succession of mono samples.

For a given value of SAMPLE.MAXCNT, the buffer in RAM can contain half the stereo sampling time as compared to the mono sampling time.

The PDM acquisition can be started by the START task, after the SAMPLE.PTR and SAMPLE.MAXCNT registers have been written. When starting the module, it will take some time for the filters to start outputting valid data. Transients from the PDM microphone itself may also occur. The first few samples (typically around 50) might hence contain invalid values or transients. It is therefore advised to discard the first few samples after a PDM start.

As soon as the STARTED event is received, the firmware can write the next SAMPLE.PTR value (this register is double-buffered), to ensure continuous operation.

When the buffer in RAM is filled with samples, an END event is triggered. The firmware can start processing the data in the buffer. Meanwhile, the PDM module starts acquiring data into the new buffer pointed to by SAMPLE.PTR, and sends a new STARTED event, so that the firmware can update SAMPLE.PTR to the next buffer address.

43.5 Hardware example

Connect the microphone clock to CLK, and data to DIN.

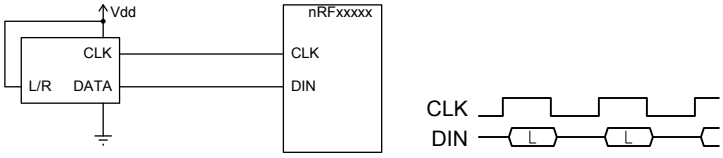

Figure 124: Example of a single PDM microphone, wired as left

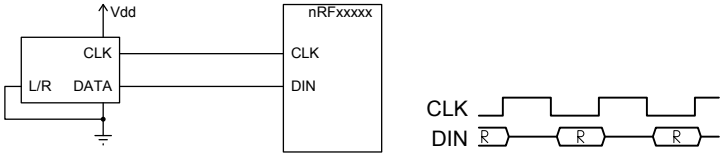

Figure 125: Example of a single PDM microphone, wired as right

Note that in a single-microphone (mono) configuration, depending on the microphone's implementation, either the left or the right channel (sampled at falling or rising CLK edge respectively) will contain reliable data. If two microphones are used, one of them has to be set as left, the other as right (L/R pin tied high or to GND on the respective microphone). It is strongly recommended to use two microphones of exactly the same brand and type so that their timings in left and right operation match.

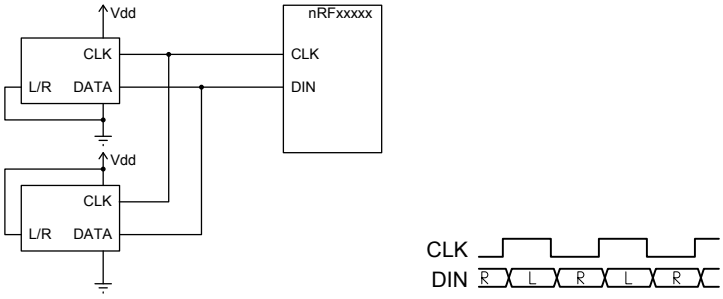

Figure 126: Example of two PDM microphones

43.6 Pin configuration

The CLK and DIN signals associated to the PDM module are mapped to physical pins according to the configuration specified in the PSEL.CLK and PSEL.DIN registers respectively. If the CONNECT field in any PSEL register is set to Disconnected, the associated PDM module signal will not be connected to the required physical pins, and will not operate properly.

The PSEL.CLK and PSEL.DIN registers and their configurations are only used as long as the PDM module is enabled, and retained only as long as the device is in System ON mode. See *POWER — Power supply* on page 76 for more information about power modes. When the peripheral is disabled, the pins will behave as regular GPIOs, and use the configuration in their respective OUT bit field and PIN_CNF[n] register.

To ensure correct behaviour in the PDM module, the pins used by the PDM module must be configured in the GPIO peripheral as described in *Table 98: GPIO configuration before enabling peripheral* on page 435 before enabling the PDM module. This is to ensure that the pins used by the PDM module are driven correctly if the PDM module itself is temporarily disabled or the device temporarily enters System OFF. This configuration must be retained in the GPIO for the selected I/Os as long as the PDM module is supposed to be connected to an external PDM circuit.

Only one peripheral can be assigned to drive a particular GPIO pin at a time. Failing to do so may result in unpredictable behaviour.

Table 98: GPIO configuration before enabling peripheral

PDM signal	PDM pin	Direction	Output value	Comment
CLK	As specified in PSEL.CLK	Output	0	
DIN	As specified in PSEL.DIN	Input	Not applicable	

43.7 Registers

Table 99: Instances

Base address	Peripheral	Instance	Description	Configuration
0x4001D000	PDM	PDM	Pulse Density Modulation (Digital Microphone) Interface	

Table 100: Register Overview

Register	Offset	Description
TASKS_START	0x000	Starts continuous PDM transfer
TASKS_STOP	0x004	Stops PDM transfer
EVENTS_STARTED	0x100	PDM transfer has started
EVENTS_STOPPED	0x104	PDM transfer has finished
EVENTS_END	0x108	The PDM has written the last sample specified by SAMPLE.MAXCNT (or the last sample after a STOP task has been received) to Data RAM
INTEN	0x300	Enable or disable interrupt
INTENSET	0x304	Enable interrupt
INTENCLR	0x308	Disable interrupt
ENABLE	0x500	PDM module enable register
PDMCLKCTRL	0x504	PDM clock generator control
MODE	0x508	Defines the routing of the connected PDM microphones' signals
GAINL	0x518	Left output gain adjustment
GAINR	0x51C	Right output gain adjustment
PSEL.CLK	0x540	Pin number configuration for PDM CLK signal
PSEL.DIN	0x544	Pin number configuration for PDM DIN signal
SAMPLE.PTR	0x560	RAM address pointer to write samples to with EasyDMA
SAMPLE.MAXCNT	0x564	Number of samples to allocate memory for in EasyDMA mode

43.7.1 INTEN

Address offset: 0x300

Enable or disable interrupt

Bit number				31	30	29	28	27	26	25	24	23	22	21	20	19	18	17	16	15	14	13	12	11	10	9	8	7	6	5	4	3	2	1	0
Id																																	C	B	A
Reset 0x00000000				**0**	**0**	**0**	**0**	**0**	**0**	**0**	**0**	**0**	**0**	**0**	**0**	**0**	**0**	**0**	**0**	**0**	**0**	**0**	**0**	**0**	**0**	**0**	**0**	**0**	**0**	**0**	**0**	**0**	**0**	**0**	**0**
Id	**RW**	**Field**	**Value Id**	**Value**																															**Description**
A	RW	STARTED																																	Enable or disable interrupt for STARTED event See *EVENTS_STARTED*
			Disabled	0																															Disable
			Enabled	1																															Enable
B	RW	STOPPED																																	Enable or disable interrupt for STOPPED event See *EVENTS_STOPPED*
			Disabled	0																															Disable
			Enabled	1																															Enable
C	RW	END																																	Enable or disable interrupt for END event See *EVENTS_END*
			Disabled	0																															Disable
			Enabled	1																															Enable

43.7.2 INTENSET

Address offset: 0x304

Enable interrupt

Bit number				31	30	29	28	27	26	25	24	23	22	21	20	19	18	17	16	15	14	13	12	11	10	9	8	7	6	5	4	3	2	1	0
Id																																	C	B	A
Reset 0x00000000				**0**	**0**	**0**	**0**	**0**	**0**	**0**	**0**	**0**	**0**	**0**	**0**	**0**	**0**	**0**	**0**	**0**	**0**	**0**	**0**	**0**	**0**	**0**	**0**	**0**	**0**	**0**	**0**	**0**	**0**	**0**	**0**
Id	**RW**	**Field**	**Value Id**	**Value**																															**Description**
A	RW	STARTED																																	Write '1' to Enable interrupt for STARTED event See *EVENTS_STARTED*
			Set	1																															Enable
			Disabled	0																															Read: Disabled
			Enabled	1																															Read: Enabled
B	RW	STOPPED																																	Write '1' to Enable interrupt for STOPPED event See *EVENTS_STOPPED*
			Set	1																															Enable
			Disabled	0																															Read: Disabled
			Enabled	1																															Read: Enabled
C	RW	END																																	Write '1' to Enable interrupt for END event See *EVENTS_END*
			Set	1																															Enable
			Disabled	0																															Read: Disabled
			Enabled	1																															Read: Enabled

43.7.3 INTENCLR

Address offset: 0x308

Disable interrupt

Bit number				31	30	29	28	27	26	25	24	23	22	21	20	19	18	17	16	15	14	13	12	11	10	9	8	7	6	5	4	3	2	1	0
Id																																	C	B	A
Reset 0x00000000				**0**	**0**	**0**	**0**	**0**	**0**	**0**	**0**	**0**	**0**	**0**	**0**	**0**	**0**	**0**	**0**	**0**	**0**	**0**	**0**	**0**	**0**	**0**	**0**	**0**	**0**	**0**	**0**	**0**	**0**	**0**	**0**
Id	**RW**	**Field**	**Value Id**	**Value**																															**Description**
A	RW	STARTED																																	Write '1' to Disable interrupt for STARTED event See *EVENTS_STARTED*
			Clear	1																															Disable
			Disabled	0																															Read: Disabled
			Enabled	1																															Read: Enabled
B	RW	STOPPED																																	Write '1' to Disable interrupt for STOPPED event

Bit number				31	30	29	28	27	26	25	24	23	22	21	20	19	18	17	16	15	14	13	12	11	10	9	8	7	6	5	4	3	2	1	0
Id																																	C	B	A
Reset 0x00000000				**0**	**0**	**0**	**0**	**0**	**0**	**0**	**0**	**0**	**0**	**0**	**0**	**0**	**0**	**0**	**0**	**0**	**0**	**0**	**0**	**0**	**0**	**0**	**0**	**0**	**0**	**0**	**0**	**0**	**0**	**0**	**0**
Id	**RW**	**Field**	**Value Id**	**Value**								**Description**																							
												See *EVENTS_STOPPED*																							
			Clear	1								Disable																							
			Disabled	0								Read: Disabled																							
			Enabled	1								Read: Enabled																							
C	RW	END										Write '1' to Disable interrupt for END event See *EVENTS_END*																							
			Clear	1								Disable																							
			Disabled	0								Read: Disabled																							
			Enabled	1								Read: Enabled																							

43.7.4 ENABLE

Address offset: 0x500

PDM module enable register

Bit number				31	30	29	28	27	26	25	24	23	22	21	20	19	18	17	16	15	14	13	12	11	10	9	8	7	6	5	4	3	2	1	0
Id																																			A
Reset 0x00000000				**0**	**0**	**0**	**0**	**0**	**0**	**0**	**0**	**0**	**0**	**0**	**0**	**0**	**0**	**0**	**0**	**0**	**0**	**0**	**0**	**0**	**0**	**0**	**0**	**0**	**0**	**0**	**0**	**0**	**0**	**0**	**0**
Id	**RW**	**Field**	**Value Id**	**Value**								**Description**																							
A	RW	ENABLE										Enable or disable PDM module																							
			Disabled	0								Disable																							
			Enabled	1								Enable																							

43.7.5 PDMCLKCTRL

Address offset: 0x504

PDM clock generator control

Bit number				31	30	29	28	27	26	25	24	23	22	21	20	19	18	17	16	15	14	13	12	11	10	9	8	7	6	5	4	3	2	1	0
Id				A	A	A	A	A	A	A	A	A	A	A	A	A	A	A	A	A	A	A	A	A	A	A	A	A	A	A	A	A	A	A	A
Reset 0x08400000				**0**	**0**	**0**	**0**	**1**	**0**	**0**	**0**	**0**	**1**	**0**	**0**	**0**	**0**	**0**	**0**	**0**	**0**	**0**	**0**	**0**	**0**	**0**	**0**	**0**	**0**	**0**	**0**	**0**	**0**	**0**	**0**
Id	**RW**	**Field**	**Value Id**	**Value**								**Description**																							
A	RW	FREQ										PDM_CLK frequency																							
			1000K	0x08000000								PDM_CLK = 32 MHz / 32 = 1.000 MHz																							
			Default	0x08400000								PDM_CLK = 32 MHz / 31 = 1.032 MHz																							
			1067K	0x08800000								PDM_CLK = 32 MHz / 30 = 1.067 MHz																							

43.7.6 MODE

Address offset: 0x508

Defines the routing of the connected PDM microphones' signals

Bit number				31	30	29	28	27	26	25	24	23	22	21	20	19	18	17	16	15	14	13	12	11	10	9	8	7	6	5	4	3	2	1	0
Id																																		B	A
Reset 0x00000000				**0**	**0**	**0**	**0**	**0**	**0**	**0**	**0**	**0**	**0**	**0**	**0**	**0**	**0**	**0**	**0**	**0**	**0**	**0**	**0**	**0**	**0**	**0**	**0**	**0**	**0**	**0**	**0**	**0**	**0**	**0**	**0**
Id	**RW**	**Field**	**Value Id**	**Value**								**Description**																							
A	RW	OPERATION										Mono or stereo operation																							
			Stereo	0								Sample and store one pair (Left + Right) of 16bit samples per RAM word R=[31:16]; L=[15:0]																							
			Mono	1								Sample and store two successive Left samples (16 bit each) per RAM word L1=[31:16]; L0=[15:0]																							
B	RW	EDGE										Defines on which PDM_CLK edge Left (or mono) is sampled																							
			LeftFalling	0								Left (or mono) is sampled on falling edge of PDM_CLK																							
			LeftRising	1								Left (or mono) is sampled on rising edge of PDM_CLK																							

43.7.7 GAINL

Address offset: 0x518

Left output gain adjustment

Bit number				31	30	29	28	27	26	25	24	23	22	21	20	19	18	17	16	15	14	13	12	11	10	9	8	7	6	5	4	3	2	1	0
Id																													A	A	A	A	A	A	A
Reset 0x00000028				**0**	**0**	**0**	**0**	**0**	**0**	**0**	**0**	**0**	**0**	**0**	**0**	**0**	**0**	**0**	**0**	**0**	**0**	**0**	**0**	**0**	**0**	**0**	**0**	**0**	**0**	**1**	**0**	**1**	**0**	**0**	**0**
Id	**RW**	**Field**	**Value Id**	**Value**																									**Description**						
A	RW	GAINL																											Left output gain adjustment, in 0.5 dB steps, around the default module gain (see electrical parameters)						
																													0x00 -20 dB gain adjust						
																													0x01 -19.5 dB gain adjust						
																													(...)						
																													0x27 -0.5 dB gain adjust						
																													0x28 0 dB gain adjust						
																													0x29 +0.5 dB gain adjust						
																													(...)						
																													0x4F +19.5 dB gain adjust						
																													0x50 +20 dB gain adjust						
			MinGain	0x00																									-20dB gain adjustment (minimum)						
			DefaultGain	0x28																									0dB gain adjustment ('2500 RMS' requirement)						
			MaxGain	0x50																									+20dB gain adjustment (maximum)						

43.7.8 GAINR

Address offset: 0x51C

Right output gain adjustment

Bit number				31	30	29	28	27	26	25	24	23	22	21	20	19	18	17	16	15	14	13	12	11	10	9	8	7	6	5	4	3	2	1	0
Id																												A	A	A	A	A	A	A	A
Reset 0x00000028				**0**	**0**	**0**	**0**	**0**	**0**	**0**	**0**	**0**	**0**	**0**	**0**	**0**	**0**	**0**	**0**	**0**	**0**	**0**	**0**	**0**	**0**	**0**	**0**	**0**	**0**	**1**	**0**	**1**	**0**	**0**	**0**
Id	**RW**	**Field**	**Value Id**	**Value**																									**Description**						
A	RW	GAINR																											Right output gain adjustment, in 0.5 dB steps, around the default module gain (see electrical parameters)						
			MinGain	0x00																									-20dB gain adjustment (minimum)						
			DefaultGain	0x28																									0dB gain adjustment ('2500 RMS' requirement)						
			MaxGain	0x50																									+20dB gain adjustment (maximum)						

43.7.9 PSEL.CLK

Address offset: 0x540

Pin number configuration for PDM CLK signal

Bit number				31	30	29	28	27	26	25	24	23	22	21	20	19	18	17	16	15	14	13	12	11	10	9	8	7	6	5	4	3	2	1	0
Id				C																											A	A	A	A	A
Reset 0xFFFFFFFF				**1**	**1**	**1**	**1**	**1**	**1**	**1**	**1**	**1**	**1**	**1**	**1**	**1**	**1**	**1**	**1**	**1**	**1**	**1**	**1**	**1**	**1**	**1**	**1**	**1**	**1**	**1**	**1**	**1**	**1**	**1**	**1**
Id	**RW**	**Field**	**Value Id**	**Value**																									**Description**						
A	RW	PIN		[0..31]																									Pin number						
C	RW	CONNECT																											Connection						
			Disconnected	1																									Disconnect						
			Connected	0																									Connect						

43.7.10 PSEL.DIN

Address offset: 0x544

Pin number configuration for PDM DIN signal

Bit number				31	30	29	28	27	26	25	24	23	22	21	20	19	18	17	16	15	14	13	12	11	10	9	8	7	6	5	4	3	2	1	0
Id				C																											A	A	A	A	A
Reset 0xFFFFFFFF				**1**	**1**	**1**	**1**	**1**	**1**	**1**	**1**	**1**	**1**	**1**	**1**	**1**	**1**	**1**	**1**	**1**	**1**	**1**	**1**	**1**	**1**	**1**	**1**	**1**	**1**	**1**	**1**	**1**	**1**	**1**	**1**
Id	**RW**	**Field**	**Value Id**	**Value**								**Description**																							
A	RW	PIN		[0..31]								Pin number																							
C	RW	CONNECT										Connection																							
			Disconnected	1								Disconnect																							
			Connected	0								Connect																							

43.7.11 SAMPLE.PTR

Address offset: 0x560

RAM address pointer to write samples to with EasyDMA

Bit number				31	30	29	28	27	26	25	24	23	22	21	20	19	18	17	16	15	14	13	12	11	10	9	8	7	6	5	4	3	2	1	0
Id				A	A	A	A	A	A	A	A	A	A	A	A	A	A	A	A	A	A	A	A	A	A	A	A	A	A	A	A	A	A	A	A
Reset 0x00000000				**0**	**0**	**0**	**0**	**0**	**0**	**0**	**0**	**0**	**0**	**0**	**0**	**0**	**0**	**0**	**0**	**0**	**0**	**0**	**0**	**0**	**0**	**0**	**0**	**0**	**0**	**0**	**0**	**0**	**0**	**0**	**0**
Id	**RW**	**Field**	**Value Id**	**Value**								**Description**																							
A	RW	SAMPLEPTR										Address to write PDM samples to over DMA																							

43.7.12 SAMPLE.MAXCNT

Address offset: 0x564

Number of samples to allocate memory for in EasyDMA mode

Bit number				31	30	29	28	27	26	25	24	23	22	21	20	19	18	17	16	15	14	13	12	11	10	9	8	7	6	5	4	3	2	1	0
Id																					A	A	A	A	A	A	A	A	A	A	A	A	A	A	A
Reset 0x00000000				**0**	**0**	**0**	**0**	**0**	**0**	**0**	**0**	**0**	**0**	**0**	**0**	**0**	**0**	**0**	**0**	**0**	**0**	**0**	**0**	**0**	**0**	**0**	**0**	**0**	**0**	**0**	**0**	**0**	**0**	**0**	**0**
Id	**RW**	**Field**	**Value Id**	**Value**								**Description**																							
A	RW	BUFFSIZE		[0..32767]								Length of DMA RAM allocation in number of samples																							

43.8 Electrical Specification

43.8.1 PDM Electrical Specification

Symbol	Description	Min.	Typ.	Max.	Units
$I_{PDM,stereo}$	PDM module active current, stereo operation[38]		1.4		mA
$f_{PDM,CLK}$	PDM clock speed		1.032		MHz
$t_{PDM,JITTER}$	Jitter in PDM clock output			20	ns
$T_{dPDM,CLK}$	PDM clock duty cycle	40	50	60	%
$t_{PDM,DATA}$	Decimation filter delay			5	ms
$t_{PDM,cv}$	Allowed clock edge to data valid			125	ns
$t_{PDM,ci}$	Allowed (other) clock edge to data invalid	0			ns
$t_{PDM,s}$	Data setup time at $f_{PDM,CLK}$=1.024 MHz	65			ns
$t_{PDM,h}$	Data hold time at $f_{PDM,CLK}$=1.024 MHz	0			ns
$G_{PDM,default}$	Default (reset) absolute gain of the PDM module		3.2		dB

[38] Average current including PDM and DMA transfers, excluding clock and power supply base currents

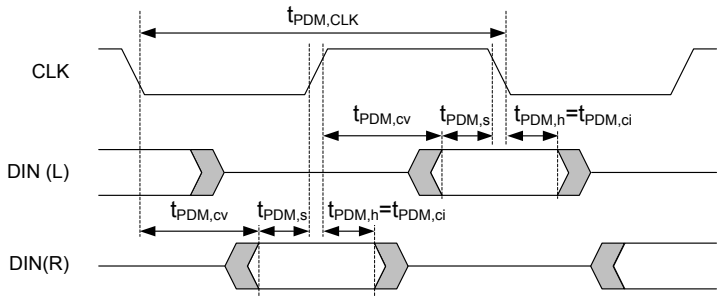

Figure 127: PDM timing diagram

44 I2S — Inter-IC sound interface

The I2S (Inter-IC Sound) module, supports the original two-channel I2S format, and left or right-aligned formats. It implements EasyDMA for sample transfer directly to and from RAM without CPU intervention.

The I2S peripheral has the following main features:

- Master and Slave mode
- Simultaneous bi-directional (TX and RX) audio streaming
- Original I2S and left- or right-aligned format
- 8, 16 and 24-bit sample width
- Low-jitter Master Clock generator
- Various sample rates

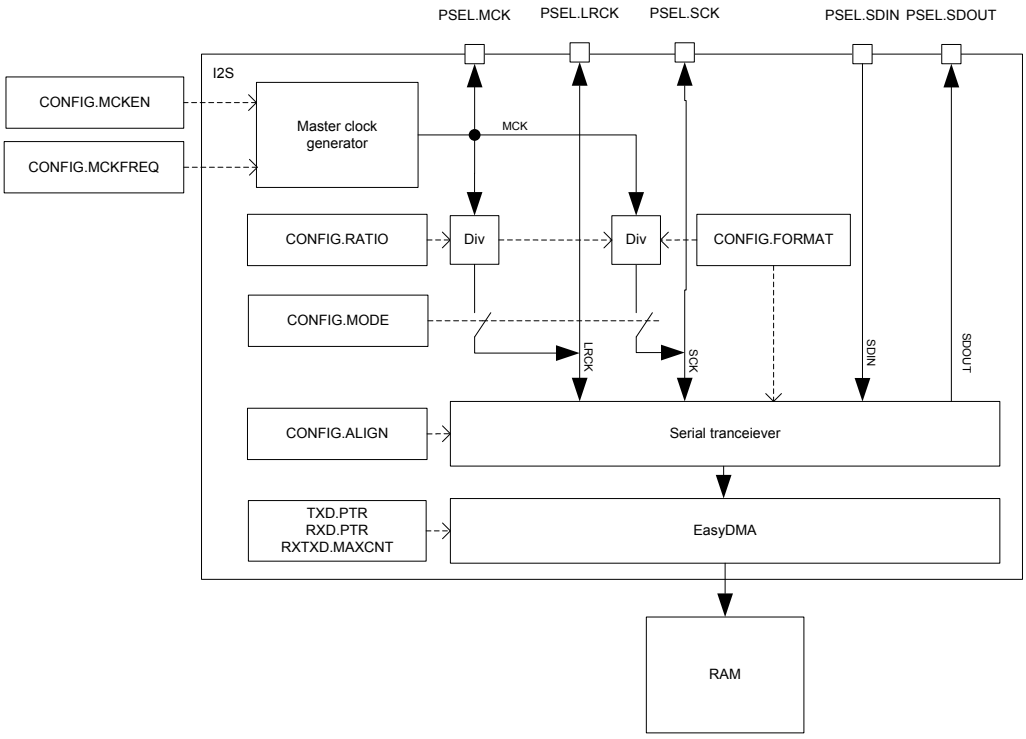

Figure 128: I2S master

44.1 Mode

The I2S protocol specification defines two modes of operation, Master and Slave.

The I2S mode decides which of the two sides (Master or Slave) shall provide the clock signals LRCK and SCK, and these signals are always supplied by the Master to the Slave.

44.2 Transmitting and receiving

The I2S module supports both transmission (TX) and reception (RX) of serial data. In both cases the serial data is shifted synchronously to the clock signals SCK and LRCK.

TX data is written to the SDOUT pin on the falling edge of SCK, and RX data is read from the SDIN pin on the rising edge of SCK. The most significant bit (MSB) is always transmitted first.

TX and RX are available in both Master and Slave modes and can be enabled/disabled independently in the *CONFIG.TXEN* on page 451 and *CONFIG.RXEN* on page 451.

Transmission and/or reception is started by triggering the START task. When started and transmission is enabled (in *CONFIG.TXEN* on page 451), the TXPTRUPD event will be generated for every *RXTXD.MAXCNT* on page 454 number of transmitted data words (containing one or more samples). Similarly, when started and reception is enabled (in *CONFIG.RXEN* on page 451), the RXPTRUPD event will be generated for every *RXTXD.MAXCNT* on page 454 received data words.

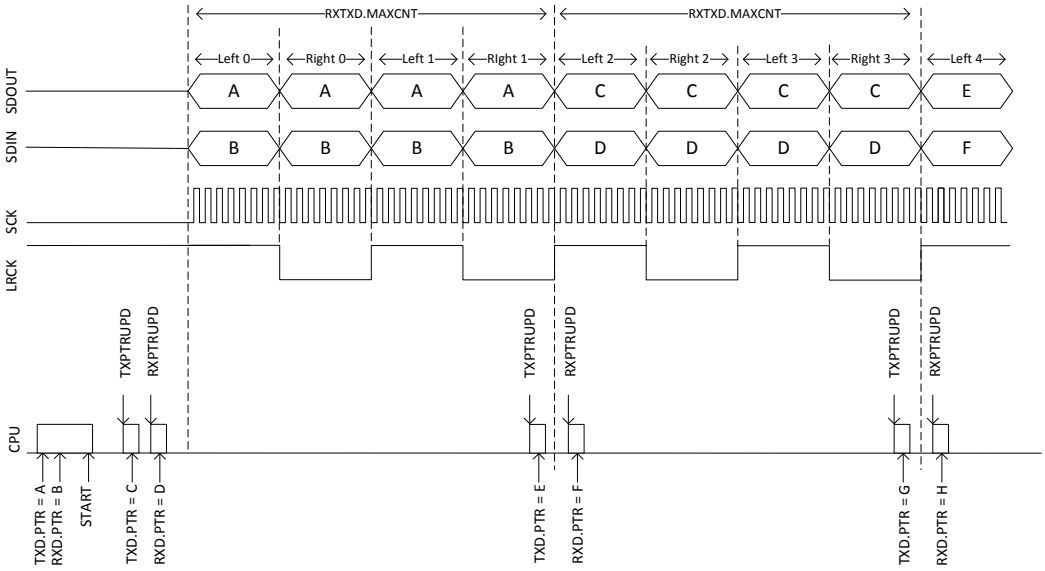

Figure 129: Transmitting and receiving. CONFIG.FORMAT = Aligned, CONFIG.SWIDTH = 8Bit, CONFIG.CHANNELS = Stereo, RXTXD.MAXCNT = 1.

44.3 Left right clock (LRCK)

The Left Right Clock (LRCK), often referred to as "word clock", "sample clock" or "word select" in I2S context, is the clock defining the frames in the serial bit streams sent and received on SDOUT and SDIN, respectively.

In I2S mode, each frame contains one left and right sample pair, with the left sample being transferred during the low half period of LRCK followed by the right sample being transferred during the high period of LRCK.

In Aligned mode, each frame contains one left and right sample pair, with the left sample being transferred during the high half period of LRCK followed by the right sample being transferred during the low period of LRCK.

Consequently, the LRCK frequency is equivalent to the audio sample rate.

When operating in Master mode, the LRCK is generated from the MCK, and the frequency of LRCK is then given as:

```
LRCK = MCK / CONFIG.RATIO
```

LRCK always toggles around the falling edge of the serial clock SCK.

44.4 Serial clock (SCK)

The serial clock (SCK), often referred to as the serial bit clock, pulses once for each data bit being transferred on the serial data lines SDIN and SDOUT.

When operating in Master mode the SCK is generated from the MCK, and the frequency of SCK is then given as:

```
SCK = 2 * LRCK * CONFIG.SWIDTH
```

The falling edge of the SCK falls on the toggling edge of LRCK.

When operating in Slave mode SCK is provided by the external I²S master.

44.5 Master clock (MCK)

The master clock (MCK) is the clock from which LRCK and SCK are derived when operating in Master mode.

The MCK is generated by an internal MCK generator. This generator always needs to be enabled when in Master mode, but the generator can also be enabled when in Slave mode. Enabling the generator when in slave mode can be useful in the case where the external Master is not able to generate its own master clock.

The MCK generator is enabled/disabled in the register *CONFIG.MCKEN* on page 452, and the generator is started or stopped by the START or STOP tasks.

In Master mode the LRCK and the SCK frequencies are closely related, as both are derived from MCK and set indirectly through *CONFIG.RATIO* on page 452 and *CONFIG.SWIDTH* on page 453.

When configuring these registers, the user is responsible for fulfilling the following requirements:

1. SCK frequency can never exceed the MCK frequency, which can be formulated as:

```
CONFIG.RATIO >= 2 * CONFIG.SWIDTH
```

2. The MCK/LRCK ratio shall be a multiple of 2 * CONFIG.SWIDTH, which can be formulated as:

```
Integer = (CONFIG.RATIO / (2 * CONFIG.SWIDTH))
```

The MCK signal can be routed to an output pin (specified in PSEL.MCK) to supply external I²S devices that require the MCK to be supplied from the outside.

When operating in Slave mode, the I²S module does not use the MCK and the MCK generator does not need to be enabled.

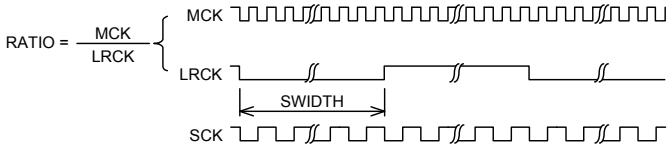

Figure 130: Relation between RATIO, MCK and LRCK.

Table 101: Configuration examples

Desired LRCK [Hz]	CONFIG.SWIDTH	CONFIG.RATIO	CONFIG.MCKFREQ	MCK [Hz]	LRCK [Hz]	LRCK error [%]
16000	16Bit	32X	32MDIV63	507936.5	15873.0	-0.8
16000	16Bit	64X	32MDIV31	1032258.1	16129.0	0.8
16000	16Bit	256X	32MDIV8	4000000.0	15625.0	-2.3
32000	16Bit	32X	32MDIV31	1032258.1	32258.1	0.8
32000	16Bit	64X	32MDIV16	2000000.0	31250.0	-2.3
32000	16Bit	256X	32MDIV4	8000000.0	31250.0	-2.3
44100	16Bit	32X	32MDIV23	1391304.3	43478.3	-1.4
44100	16Bit	64X	32MDIV11	2909090.9	45454.5	3.1
44100	16Bit	256X	32MDIV3	10666666.7	41666.7	-5.5

44.6 Width, alignment and format

The CONFIG.SWIDTH register primarily defines the sample width of the data written to memory. In master mode, it then also sets the amount of bits per frame. In Slave mode it controls padding/trimming if required. Left, right, transmitted, and received samples always have the same width. The CONFIG.FORMAT register specifies the position of the data frames with respect to the LRCK edges in both Master and Slave modes.

When using I²S format, the first bit in a half-frame (containing one left or right sample) gets sampled on the second rising edge of the SCK after a LRCK edge. When using Aligned mode, the first bit in a half-frame gets sampled on the first rising edge of SCK following a LRCK edge.

For data being received on SDIN the sample value can be either right or left-aligned inside a half-frame, as specified in *CONFIG.ALIGN* on page 453. *CONFIG.ALIGN* on page 453 affects only the decoding of the incoming samples (SDIN), while the outgoing samples (SDOUT) are always left-aligned (or justified).

When using left-alignment, each half-frame starts with the MSB of the sample value (both for data being sent on SDOUT and received on SDIN).

When using right-alignment, each half-frame of data being received on SDIN ends with the LSB of the sample value, while each half-frame of data being sent on SDOUT starts with the MSB of the sample value (same as for left-alignment).

In Master mode, the size of a half-frame (in number of SCK periods) equals the sample width (in number of bits), and in this case the alignment setting does not care as each half-frame in any case will start with the MSB and end with the LSB of the sample value.

In slave mode, however, the sample width does not need to equal the frame size. This means you might have extra or fewer SCK pulses per half-frame than what the sample width specified in *CONFIG.SWIDTH* requires.

In the case where we use **left-alignment** and the number of SCK pulses per half-frame is **higher** than the sample width, the following will apply:

- For data received on SDIN, all bits after the LSB of the sample value will be discarded.
- For data sent on SDOUT, all bits after the LSB of the sample value will be 0.

In the case where we use **left-alignment** and the number of SCK pulses per frame is **lower** than the sample width, the following will apply:

- Data sent and received on SDOUT and SDIN will be truncated with the LSBs being removed first.

In the case where we use **right-alignment** and the number of SCK pulses per frame is **higher** than the sample width, the following will apply:

- For data received on SDIN, all bits before the MSB of the sample value will be discarded.
- For data sent on SDOUT, all bits after the LSB of the sample value will be 0 (same behavior as for left-alignment).

In the case where we use **right-alignment** and the number of SCK pulses per frame is **lower** than the sample width, the following will apply:

- Data received on SDIN will be sign-extended to "sample width" number of bits before being written to memory.
- Data sent on SDOUT will be truncated with the LSBs being removed first (same behavior as for left-alignment).

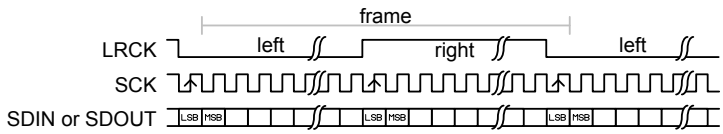

Figure 131: I²S format. CONFIG.SWIDTH equalling half-frame size.

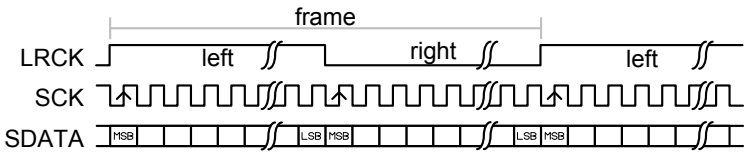

Figure 132: Aligned format. CONFIG.SWIDTH equalling half-frame size.

44.7 EasyDMA

The I2S module implements EasyDMA for accessing internal Data RAM without CPU intervention.

The source and destination pointers for the TX and RX data are configured in *TXD.PTR* on page 454 and *RXD.PTR* on page 454. The memory pointed to by these pointers will only be read or written when TX or RX are enabled in *CONFIG.TXEN* on page 451 and *CONFIG.RXEN* on page 451.

The addresses written to the pointer registers *TXD.PTR* on page 454 and *RXD.PTR* on page 454 are double-buffered in hardware, and these double buffers are updated for every *RXTXD.MAXCNT* on page 454 words (containing one or more samples) read/written from/to memory. The events TXPTRUPD and RXPTRUPD are generated whenever the TXD.PTR and RXD.PTR are transferred to these double buffers.

If *TXD.PTR* on page 454 is not pointing to the Data RAM region when transmission is enabled, or *RXD.PTR* on page 454 is not pointing to the Data RAM region when reception is enabled, an EasyDMA transfer may result in a HardFault and/or memory corruption. See *Memory* on page 20 for more information about the different memory regions.

Due to the nature of I2S, where the number of transmitted samples always equals the number of received samples (at least when both TX and RX are enabled), one common register *RXTXD.MAXCNT* on page 454 is used for specifying the sizes of these two memory buffers. The size of the buffers is specified in a number of 32-bit words. Such a 32-bit memory word can either contain four 8-bit samples, two 16-bit samples or one right-aligned 24-bit sample sign extended to 32 bit.

In stereo mode (decided by CONFIG.CHANNELS), the samples are stored as "left and right sample pairs" in memory. Figure *Figure 133: Memory mapping for 8 bit stereo. CONFIG.SWIDTH = 8Bit, CONFIG.CHANNELS = Stereo.* on page 445, *Figure 135: Memory mapping for 16 bit stereo. CONFIG.SWIDTH = 16Bit, CONFIG.CHANNELS = Stereo.* on page 446 and *Figure 137: Memory mapping for 24 bit stereo. CONFIG.SWIDTH = 24Bit, CONFIG.CHANNELS = Stereo.* on page 446 show how the samples are mapped to memory in this mode.

In mono mode (left or right channel only), samples for only one single channel are stored in memory. Figure *Figure 134: Memory mapping for 8 bit mono. CONFIG.SWIDTH = 8Bit, CONFIG.CHANNELS = Left.* on page 446, *Figure 136: Memory mapping for 16 bit mono, left channel only. CONFIG.SWIDTH = 16Bit, CONFIG.CHANNELS = Left.* on page 446 and *Figure 138: Memory mapping for 24 bit mono, left channel only. CONFIG.SWIDTH = 24Bit, CONFIG.CHANNELS = Left.* on page 447 show how samples are mapped to memory in this mode.

	31 24	23 16	15 8	7 0
x.PTR	Right sample 1	Left sample 1	Right sample 0	Left sample 0
x.PTR + 4	Right sample 3	Left sample 3	Right sample 2	Left sample 2
x.PTR + (n*2) - 4	Left sample n-1	Right sample n-1	Right sample n-2	Left sample n-2

Figure 133: Memory mapping for 8 bit stereo. CONFIG.SWIDTH = 8Bit, CONFIG.CHANNELS = Stereo.

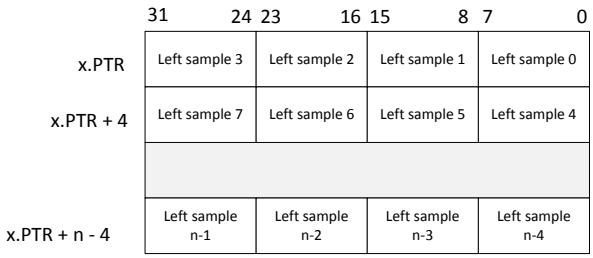

Figure 134: Memory mapping for 8 bit mono. CONFIG.SWIDTH = 8Bit, CONFIG.CHANNELS = Left.

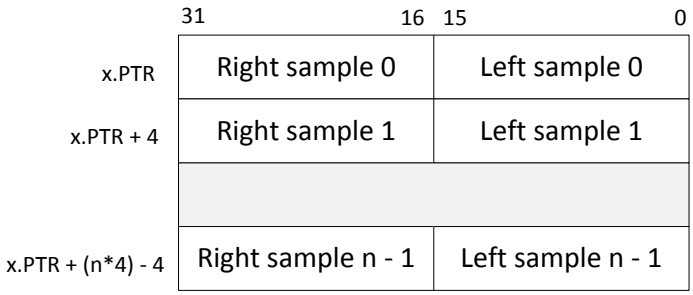

Figure 135: Memory mapping for 16 bit stereo. CONFIG.SWIDTH = 16Bit, CONFIG.CHANNELS = Stereo.

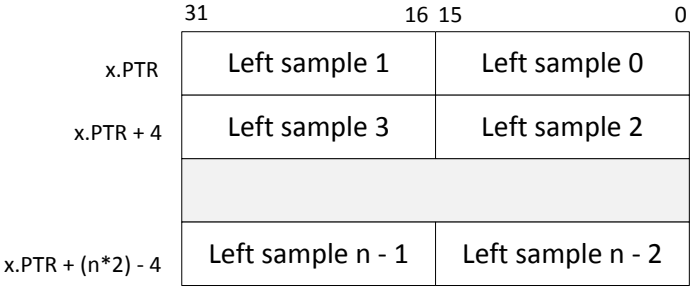

Figure 136: Memory mapping for 16 bit mono, left channel only. CONFIG.SWIDTH = 16Bit, CONFIG.CHANNELS = Left.

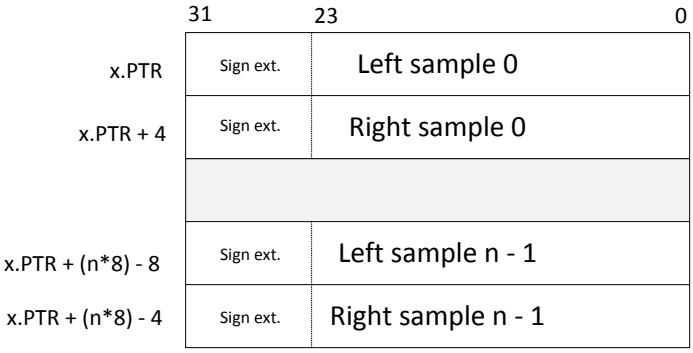

Figure 137: Memory mapping for 24 bit stereo. CONFIG.SWIDTH = 24Bit, CONFIG.CHANNELS = Stereo.

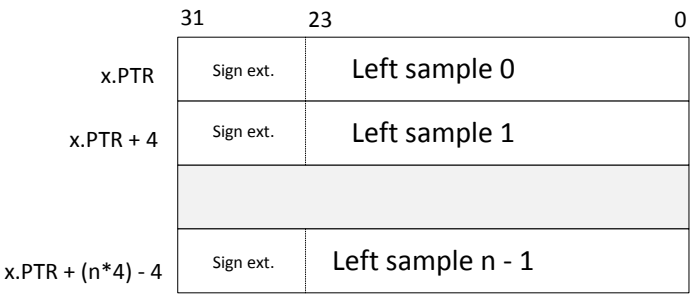

Figure 138: Memory mapping for 24 bit mono, left channel only. CONFIG.SWIDTH = 24Bit, CONFIG.CHANNELS = Left.

44.8 Module operation

Described here is a typical operating procedure for the I²S module.

1. Configure the I²S module using the CONFIG registers

```
// Enable reception
NRF_I2S->CONFIG.RXEN = (I2S_CONFIG_RXEN_RXEN_Enabled <<
                                        I2S_CONFIG_RXEN_RXEN_Pos);
// Enable transmission
NRF_I2S->CONFIG.TXEN = (I2S_CONFIG_TXEN_TXEN_Enabled <<
                                        I2S_CONFIG_TXEN_TXEN_Pos);
// Enable MCK generator
NRF_I2S->CONFIG.MCKEN = (I2S_CONFIG_MCKEN_MCKEN_Enabled <<
                                        I2S_CONFIG_MCKEN_MCKEN_Pos);
// MCKFREQ = 4 MHz
NRF_I2S->CONFIG.MCKFREQ = I2S_CONFIG_MCKFREQ_MCKFREQ_32MDIV8 <<
                                        I2S_CONFIG_MCKFREQ_MCKFREQ_Pos;
// Ratio = 256
NRF_I2S->CONFIG.RATIO = I2S_CONFIG_RATIO_RATIO_256X <<
                                        I2S_CONFIG_RATIO_RATIO_Pos;
// MCKFREQ = 4 MHz and Ratio = 256 gives sample rate = 15.625 ks/s
// Sample width = 16 bit
NRF_I2S->CONFIG.SWIDTH = I2S_CONFIG_SWIDTH_SWIDTH_16Bit <<
                                        I2S_CONFIG_SWIDTH_SWIDTH_Pos;
// Alignment = Left
NRF_I2S->CONFIG.ALIGN = I2S_CONFIG_ALIGN_ALIGN_Left <<
                                        I2S_CONFIG_ALIGN_ALIGN_Pos;
// Format = I2S
NRF_I2S->CONFIG.FORMAT = I2S_CONFIG_FORMAT_FORMAT_I2S <<
                                        I2S_CONFIG_FORMAT_FORMAT_Pos;
// Use stereo
NRF_I2S->CONFIG.CHANNELS = I2S_CONFIG_CHANNELS_CHANNELS_Stereo <<
                                        I2S_CONFIG_CHANNELS_CHANNELS_Pos;
```

2. Map IO pins using the PINSEL registers

```
// MCK routed to pin 0
NRF_I2S->PSEL.MCK = (0 << I2S_PSEL_MCK_CONNECT_Pos) |
                    (I2S_PSEL_MCK_CONNECT_Connected <<
                                                I2S_PSEL_MCK_CONNECT_Pos);
// SCK routed to pin 1
NRF_I2S->PSEL.SCK = (1 << I2S_PSEL_SCK_CONNECT_Pos) |
                    (I2S_PSEL_SCK_CONNECT_Connected <<

 I2S_PSEL_SCK_CONNECT_Pos);
// LRCK routed to pin 2
NRF_I2S->PSEL.LRCK = (2 << I2S_PSEL_LRCK_CONNECT_Pos) |
                     (I2S_PSEL_LRCK_CONNECT_Connected <<
```

```
 I2S_PSEL_LRCK_CONNECT_Pos);
// SDOUT routed to pin 3
NRF_I2S->PSEL.SDOUT = (3 << I2S_PSEL_SDOUT_CONNECT_Pos) |
                      (I2S_PSEL_SDOUT_CONNECT_Connected <<

 I2S_PSEL_SDOUT_CONNECT_Pos);
// SDIN routed on pin 4
NRF_I2S->PSEL.SDIN = (4 << I2S_PSEL_SDIN_CONNECT_Pos) |
                     (I2S_PSEL_SDIN_CONNECT_Connected <<

 I2S_PSEL_SDIN_CONNECT_Pos);
```

3. Configure TX and RX data pointers using the TXD, RXD and RXTXD registers

```
NRF_I2S->TXD.PTR = my_tx_buf;
NRF_I2S->RXD.PTR = my_rx_buf;
NRF_I2S->TXD.MAXCNT = MY_BUF_SIZE;
```

4. Enable the I²S module using the ENABLE register

```
NRF_I2S->ENABLE = 1;
```

5. Start audio streaming using the START task

```
NRF_I2S->TASKS_START = 1;
```

6. Handle received and transmitted data when receiving the TXPTRUPD and RXPTRUPD events

```
if(NRF_I2S->EVENTS_TXPTRUPD  != 0)
{
    NRF_I2S->TXD.PTR = my_next_tx_buf;
    NRF_I2S->EVENTS_TXPTRUPD = 0;
}

if(NRF_I2S->EVENTS_RXPTRUPD != 0)
{
    NRF_I2S->RXD.PTR = my_next_rx_buf;
    NRF_I2S->EVENTS_RXPTRUPD = 0;
}
```

44.9 Pin configuration

The MCK, SCK, LRCK, SDIN and SDOUT signals associated with the I²S module are mapped to physical pins according to the pin numbers specified in the PSEL.x registers.

These pins are acquired whenever the I²S module is enabled through the register *ENABLE* on page 451.

When a pin is acquired by the I²S module, the direction of the pin (input or output) will be configured automatically, and any pin direction setting done in the GPIO module will be overridden. The directions for the various I²S pins are shown below in *Table 102: GPIO configuration before enabling peripheral (master mode)* on page 448 and *Table 103: GPIO configuration before enabling peripheral (slave mode)* on page 449.

To secure correct signal levels on the pins when the system is in OFF mode, and when the I²S module is disabled, these pins must be configured in the GPIO peripheral directly.

Table 102: GPIO configuration before enabling peripheral (master mode)

I²S signal	I²S pin	Direction	Output value	Comment
MCK	As specified in PSEL.MCK	Output	0	
LRCK	As specified in PSEL.LRCK	Output	0	

I²S signal	I²S pin	Direction	Output value	Comment
SCK	As specified in PSEL.SCK	Output	0	
SDIN	As specified in PSEL.SDIN	Input	Not applicable	
SDOUT	As specified in PSEL.SDOUT	Output	0	

Table 103: GPIO configuration before enabling peripheral (slave mode)

I²S signal	I²S pin	Direction	Output value	Comment
MCK	As specified in PSEL.MCK	Output	0	
LRCK	As specified in PSEL.LRCK	Input	Not applicable	
SCK	As specified in PSEL.SCK	Input	Not applicable	
SDIN	As specified in PSEL.SDIN	Input	Not applicable	
SDOUT	As specified in PSEL.SDOUT	Output	0	

44.10 Registers

Table 104: Instances

Base address	Peripheral	Instance	Description	Configuration
0x40025000	I2S	I2S	Inter-IC Sound interface	

Table 105: Register Overview

Register	Offset	Description
TASKS_START	0x000	Starts continuous I2S transfer. Also starts MCK generator when this is enabled.
TASKS_STOP	0x004	Stops I2S transfer. Also stops MCK generator. Triggering this task will cause the {event:STOPPED} event to be generated.
EVENTS_RXPTRUPD	0x104	The RXD.PTR register has been copied to internal double-buffers. When the I2S module is started and RX is enabled, this event will be generated for every RXTXD.MAXCNT words that are received on the SDIN pin.
EVENTS_STOPPED	0x108	I2S transfer stopped.
EVENTS_TXPTRUPD	0x114	The TDX.PTR register has been copied to internal double-buffers. When the I2S module is started and TX is enabled, this event will be generated for every RXTXD.MAXCNT words that are sent on the SDOUT pin.
INTEN	0x300	Enable or disable interrupt
INTENSET	0x304	Enable interrupt
INTENCLR	0x308	Disable interrupt
ENABLE	0x500	Enable I2S module.
CONFIG.MODE	0x504	I2S mode.
CONFIG.RXEN	0x508	Reception (RX) enable.
CONFIG.TXEN	0x50C	Transmission (TX) enable.
CONFIG.MCKEN	0x510	Master clock generator enable.
CONFIG.MCKFREQ	0x514	Master clock generator frequency.
CONFIG.RATIO	0x518	MCK / LRCK ratio.
CONFIG.SWIDTH	0x51C	Sample width.
CONFIG.ALIGN	0x520	Alignment of sample within a frame.
CONFIG.FORMAT	0x524	Frame format.
CONFIG.CHANNELS	0x528	Enable channels.
RXD.PTR	0x538	Receive buffer RAM start address.
TXD.PTR	0x540	Transmit buffer RAM start address.
RXTXD.MAXCNT	0x550	Size of RXD and TXD buffers.
PSEL.MCK	0x560	Pin select for MCK signal.
PSEL.SCK	0x564	Pin select for SCK signal.
PSEL.LRCK	0x568	Pin select for LRCK signal.
PSEL.SDIN	0x56C	Pin select for SDIN signal.
PSEL.SDOUT	0x570	Pin select for SDOUT signal.

44.10.1 INTEN

Address offset: 0x300

Enable or disable interrupt

Bit number				31	30	29	28	27	26	25	24	23	22	21	20	19	18	17	16	15	14	13	12	11	10	9	8	7	6	5	4	3	2	1	0
Id																														F			C	B	
Reset 0x00000000				**0**	**0**	**0**	**0**	**0**	**0**	**0**	**0**	**0**	**0**	**0**	**0**	**0**	**0**	**0**	**0**	**0**	**0**	**0**	**0**	**0**	**0**	**0**	**0**	**0**	**0**	**0**	**0**	**0**	**0**	**0**	**0**
Id	**RW**	**Field**	**Value Id**	**Value**								**Description**																							
B	RW	RXPTRUPD										Enable or disable interrupt for RXPTRUPD event See *EVENTS_RXPTRUPD*																							
			Disabled	0								Disable																							
			Enabled	1								Enable																							
C	RW	STOPPED										Enable or disable interrupt for STOPPED event See *EVENTS_STOPPED*																							
			Disabled	0								Disable																							
			Enabled	1								Enable																							
F	RW	TXPTRUPD										Enable or disable interrupt for TXPTRUPD event See *EVENTS_TXPTRUPD*																							
			Disabled	0								Disable																							
			Enabled	1								Enable																							

44.10.2 INTENSET

Address offset: 0x304

Enable interrupt

Bit number				31	30	29	28	27	26	25	24	23	22	21	20	19	18	17	16	15	14	13	12	11	10	9	8	7	6	5	4	3	2	1	0
Id																														F			C	B	
Reset 0x00000000				**0**	**0**	**0**	**0**	**0**	**0**	**0**	**0**	**0**	**0**	**0**	**0**	**0**	**0**	**0**	**0**	**0**	**0**	**0**	**0**	**0**	**0**	**0**	**0**	**0**	**0**	**0**	**0**	**0**	**0**	**0**	**0**
Id	**RW**	**Field**	**Value Id**	**Value**								**Description**																							
B	RW	RXPTRUPD										Write '1' to Enable interrupt for RXPTRUPD event See *EVENTS_RXPTRUPD*																							
			Set	1								Enable																							
			Disabled	0								Read: Disabled																							
			Enabled	1								Read: Enabled																							
C	RW	STOPPED										Write '1' to Enable interrupt for STOPPED event See *EVENTS_STOPPED*																							
			Set	1								Enable																							
			Disabled	0								Read: Disabled																							
			Enabled	1								Read: Enabled																							
F	RW	TXPTRUPD										Write '1' to Enable interrupt for TXPTRUPD event See *EVENTS_TXPTRUPD*																							
			Set	1								Enable																							
			Disabled	0								Read: Disabled																							
			Enabled	1								Read: Enabled																							

44.10.3 INTENCLR

Address offset: 0x308

Disable interrupt

Bit number				31	30	29	28	27	26	25	24	23	22	21	20	19	18	17	16	15	14	13	12	11	10	9	8	7	6	5	4	3	2	1	0
Id																														F			C	B	
Reset 0x00000000				**0**	**0**	**0**	**0**	**0**	**0**	**0**	**0**	**0**	**0**	**0**	**0**	**0**	**0**	**0**	**0**	**0**	**0**	**0**	**0**	**0**	**0**	**0**	**0**	**0**	**0**	**0**	**0**	**0**	**0**	**0**	**0**
Id	**RW**	**Field**	**Value Id**	**Value**								**Description**																							
B	RW	RXPTRUPD										Write '1' to Disable interrupt for RXPTRUPD event See *EVENTS_RXPTRUPD*																							
			Clear	1								Disable																							
			Disabled	0								Read: Disabled																							
			Enabled	1								Read: Enabled																							
C	RW	STOPPED										Write '1' to Disable interrupt for STOPPED event																							

Bit number				31	30	29	28	27	26	25	24	23	22	21	20	19	18	17	16	15	14	13	12	11	10	9	8	7	6	5	4	3	2	1	0
Id																														F			C	B	
Reset 0x00000000				**0**	**0**	**0**	**0**	**0**	**0**	**0**	**0**	**0**	**0**	**0**	**0**	**0**	**0**	**0**	**0**	**0**	**0**	**0**	**0**	**0**	**0**	**0**	**0**	**0**	**0**	**0**	**0**	**0**	**0**	**0**	**0**
Id	**RW**	**Field**	**Value Id**	**Value**								**Description**																							
												See *EVENTS_STOPPED*																							
			Clear	1								Disable																							
			Disabled	0								Read: Disabled																							
			Enabled	1								Read: Enabled																							
F	RW	TXPTRUPD										Write '1' to Disable interrupt for TXPTRUPD event See *EVENTS_TXPTRUPD*																							
			Clear	1								Disable																							
			Disabled	0								Read: Disabled																							
			Enabled	1								Read: Enabled																							

44.10.4 ENABLE

Address offset: 0x500

Enable I2S module.

Bit number				31	30	29	28	27	26	25	24	23	22	21	20	19	18	17	16	15	14	13	12	11	10	9	8	7	6	5	4	3	2	1	0
Id																																			A
Reset 0x00000000				**0**	**0**	**0**	**0**	**0**	**0**	**0**	**0**	**0**	**0**	**0**	**0**	**0**	**0**	**0**	**0**	**0**	**0**	**0**	**0**	**0**	**0**	**0**	**0**	**0**	**0**	**0**	**0**	**0**	**0**	**0**	**0**
Id	**RW**	**Field**	**Value Id**	**Value**								**Description**																							
A	RW	ENABLE										Enable I2S module.																							
			Disabled	0								Disable																							
			Enabled	1								Enable																							

44.10.5 CONFIG.MODE

Address offset: 0x504

I2S mode.

Bit number				31	30	29	28	27	26	25	24	23	22	21	20	19	18	17	16	15	14	13	12	11	10	9	8	7	6	5	4	3	2	1	0
Id																																			A
Reset 0x00000000				**0**	**0**	**0**	**0**	**0**	**0**	**0**	**0**	**0**	**0**	**0**	**0**	**0**	**0**	**0**	**0**	**0**	**0**	**0**	**0**	**0**	**0**	**0**	**0**	**0**	**0**	**0**	**0**	**0**	**0**	**0**	**0**
Id	**RW**	**Field**	**Value Id**	**Value**								**Description**																							
A	RW	MODE										I2S mode.																							
			Master	0								Master mode. SCK and LRCK generated from internal master clcok (MCK) and output on pins defined by PSEL.xxx.																							
			Slave	1								Slave mode. SCK and LRCK generated by external master and received on pins defined by PSEL.xxx																							

44.10.6 CONFIG.RXEN

Address offset: 0x508

Reception (RX) enable.

Bit number				31	30	29	28	27	26	25	24	23	22	21	20	19	18	17	16	15	14	13	12	11	10	9	8	7	6	5	4	3	2	1	0
Id																																			A
Reset 0x00000000				**0**	**0**	**0**	**0**	**0**	**0**	**0**	**0**	**0**	**0**	**0**	**0**	**0**	**0**	**0**	**0**	**0**	**0**	**0**	**0**	**0**	**0**	**0**	**0**	**0**	**0**	**0**	**0**	**0**	**0**	**0**	**0**
Id	**RW**	**Field**	**Value Id**	**Value**								**Description**																							
A	RW	RXEN										Reception (RX) enable.																							
			Disabled	0								Reception disabled and now data will be written to the RXD.PTR address.																							
			Enabled	1								Reception enabled.																							

44.10.7 CONFIG.TXEN

Address offset: 0x50C

Transmission (TX) enable.

Bit number				31	30	29	28	27	26	25	24	23	22	21	20	19	18	17	16	15	14	13	12	11	10	9	8	7	6	5	4	3	2	1	0
Id																																			A
Reset 0x00000001				**0**	**0**	**0**	**0**	**0**	**0**	**0**	**0**	**0**	**0**	**0**	**0**	**0**	**0**	**0**	**0**	**0**	**0**	**0**	**0**	**0**	**0**	**0**	**0**	**0**	**0**	**0**	**0**	**0**	**0**	**0**	**1**
Id	**RW**	**Field**	**Value Id**	**Value**																															**Description**
A	RW	TXEN																																	Transmission (TX) enable.
			Disabled	0																															Transmission disabled and now data will be read from the RXD.TXD address.
			Enabled	1																															Transmission enabled.

44.10.8 CONFIG.MCKEN

Address offset: 0x510

Master clock generator enable.

Bit number				31	30	29	28	27	26	25	24	23	22	21	20	19	18	17	16	15	14	13	12	11	10	9	8	7	6	5	4	3	2	1	0
Id																																			A
Reset 0x00000001				**0**	**0**	**0**	**0**	**0**	**0**	**0**	**0**	**0**	**0**	**0**	**0**	**0**	**0**	**0**	**0**	**0**	**0**	**0**	**0**	**0**	**0**	**0**	**0**	**0**	**0**	**0**	**0**	**0**	**0**	**0**	**1**
Id	**RW**	**Field**	**Value Id**	**Value**																															**Description**
A	RW	MCKEN																																	Master clock generator enable.
			Disabled	0																															Master clock generator disabled and PSEL.MCK not connected(available as GPIO).
			Enabled	1																															Master clock generator running and MCK output on PSEL.MCK.

44.10.9 CONFIG.MCKFREQ

Address offset: 0x514

Master clock generator frequency.

Bit number				31	30	29	28	27	26	25	24	23	22	21	20	19	18	17	16	15	14	13	12	11	10	9	8	7	6	5	4	3	2	1	0
Id				A	A	A	A	A	A	A	A	A	A	A	A	A	A	A	A	A	A	A	A	A	A	A	A	A	A	A	A	A	A	A	A
Reset 0x20000000				**0**	**0**	**1**	**0**	**0**	**0**	**0**	**0**	**0**	**0**	**0**	**0**	**0**	**0**	**0**	**0**	**0**	**0**	**0**	**0**	**0**	**0**	**0**	**0**	**0**	**0**	**0**	**0**	**0**	**0**	**0**	**0**
Id	**RW**	**Field**	**Value Id**	**Value**																															**Description**
A	RW	MCKFREQ																																	Master clock generator frequency.
			32MDIV2	0x80000000																															32 MHz / 2 = 16.0 MHz
			32MDIV3	0x50000000																															32 MHz / 3 = 10.6666667 MHz
			32MDIV4	0x40000000																															32 MHz / 4 = 8.0 MHz
			32MDIV5	0x30000000																															32 MHz / 5 = 6.4 MHz
			32MDIV6	0x28000000																															32 MHz / 6 = 5.3333333 MHz
			32MDIV8	0x20000000																															32 MHz / 8 = 4.0 MHz
			32MDIV10	0x18000000																															32 MHz / 10 = 3.2 MHz
			32MDIV11	0x16000000																															32 MHz / 11 = 2.9090909 MHz
			32MDIV15	0x11000000																															32 MHz / 15 = 2.1333333 MHz
			32MDIV16	0x10000000																															32 MHz / 16 = 2.0 MHz
			32MDIV21	0x0C000000																															32 MHz / 21 = 1.5238095
			32MDIV23	0x0B000000																															32 MHz / 23 = 1.3913043 MHz
			32MDIV30	0x08800000																															32 MHz / 30 = 1.0666667 MHz
			32MDIV31	0x08400000																															32 MHz / 31 = 1.0322581 MHz
			32MDIV32	0x08000000																															32 MHz / 32 = 1.0 MHz
			32MDIV42	0x06000000																															32 MHz / 42 = 0.7619048 MHz
			32MDIV63	0x04100000																															32 MHz / 63 = 0.5079365 MHz
			32MDIV125	0x020C0000																															32 MHz / 125 = 0.256 MHz

44.10.10 CONFIG.RATIO

Address offset: 0x518

MCK / LRCK ratio.

Bit number				31	30	29	28	27	26	25	24	23	22	21	20	19	18	17	16	15	14	13	12	11	10	9	8	7	6	5	4	3	2	1	0
Id																																A	A	A	A
Reset 0x00000006				**0**	**0**	**0**	**0**	**0**	**0**	**0**	**0**	**0**	**0**	**0**	**0**	**0**	**0**	**0**	**0**	**0**	**0**	**0**	**0**	**0**	**0**	**0**	**0**	**0**	**0**	**0**	**0**	**1**	**1**	**0**
Id	**RW**	**Field**	**Value Id**	**Value**																															
A	RW	RATIO																																	
			32X	0																															
			48X	1																															
			64X	2																															
			96X	3																															
			128X	4																															
			192X	5																															
			256X	6																															
			384X	7																															
			512X	8																															

44.10.11 CONFIG.SWIDTH

Address offset: 0x51C

Sample width.

Bit number				31	30	29	28	27	26	25	24	23	22	21	20	19	18	17	16	15	14	13	12	11	10	9	8	7	6	5	4	3	2	1	0
Id																																		A	A
Reset 0x00000001				**0**	**0**	**0**	**0**	**0**	**0**	**0**	**0**	**0**	**0**	**0**	**0**	**0**	**0**	**0**	**0**	**0**	**0**	**0**	**0**	**0**	**0**	**0**	**0**	**0**	**0**	**0**	**0**	**0**	**0**	**0**	**1**
Id	**RW**	**Field**	**Value Id**	**Value**																															
A	RW	SWIDTH																																	
			8Bit	0																															
			16Bit	1																															
			24Bit	2																															

44.10.12 CONFIG.ALIGN

Address offset: 0x520

Alignment of sample within a frame.

Bit number				31	30	29	28	27	26	25	24	23	22	21	20	19	18	17	16	15	14	13	12	11	10	9	8	7	6	5	4	3	2	1	0
Id																																			A
Reset 0x00000000				**0**	**0**	**0**	**0**	**0**	**0**	**0**	**0**	**0**	**0**	**0**	**0**	**0**	**0**	**0**	**0**	**0**	**0**	**0**	**0**	**0**	**0**	**0**	**0**	**0**	**0**	**0**	**0**	**0**	**0**	**0**	**0**
Id	**RW**	**Field**	**Value Id**	**Value**																															
A	RW	ALIGN																																	
			Left	0																															
			Right	1																															

44.10.13 CONFIG.FORMAT

Address offset: 0x524

Frame format.

Bit number				31	30	29	28	27	26	25	24	23	22	21	20	19	18	17	16	15	14	13	12	11	10	9	8	7	6	5	4	3	2	1	0
Id																																			A
Reset 0x00000000				**0**	**0**	**0**	**0**	**0**	**0**	**0**	**0**	**0**	**0**	**0**	**0**	**0**	**0**	**0**	**0**	**0**	**0**	**0**	**0**	**0**	**0**	**0**	**0**	**0**	**0**	**0**	**0**	**0**	**0**	**0**	**0**
Id	**RW**	**Field**	**Value Id**	**Value**																															
A	RW	FORMAT																																	
			I2S	0																															
			Aligned	1																															

44.10.14 CONFIG.CHANNELS

Address offset: 0x528

Enable channels.

Bit number				31	30	29	28	27	26	25	24	23	22	21	20	19	18	17	16	15	14	13	12	11	10	9	8	7	6	5	4	3	2	1	0
Id																																		A	A
Reset 0x00000000				**0**	**0**	**0**	**0**	**0**	**0**	**0**	**0**	**0**	**0**	**0**	**0**	**0**	**0**	**0**	**0**	**0**	**0**	**0**	**0**	**0**	**0**	**0**	**0**	**0**	**0**	**0**	**0**	**0**	**0**	**0**	**0**
Id	**RW**	**Field**	**Value Id**	**Value**								**Description**																							
A	RW	CHANNELS										Enable channels.																							
			Stereo	0								Stereo.																							
			Left	1								Left only.																							
			Right	2								Right only.																							

44.10.15 RXD.PTR

Address offset: 0x538

Receive buffer RAM start address.

Bit number				31	30	29	28	27	26	25	24	23	22	21	20	19	18	17	16	15	14	13	12	11	10	9	8	7	6	5	4	3	2	1	0
Id				A	A	A	A	A	A	A	A	A	A	A	A	A	A	A	A	A	A	A	A	A	A	A	A	A	A	A	A	A	A	A	A
Reset 0x00000000				**0**	**0**	**0**	**0**	**0**	**0**	**0**	**0**	**0**	**0**	**0**	**0**	**0**	**0**	**0**	**0**	**0**	**0**	**0**	**0**	**0**	**0**	**0**	**0**	**0**	**0**	**0**	**0**	**0**	**0**	**0**	**0**
Id	**RW**	**Field**	**Value Id**	**Value**								**Description**																							
A	RW	PTR										Receive buffer Data RAM start address. When receiving, words containing samples will be written to this address. This address is a word aligned Data RAM address.																							

44.10.16 TXD.PTR

Address offset: 0x540

Transmit buffer RAM start address.

Bit number				31	30	29	28	27	26	25	24	23	22	21	20	19	18	17	16	15	14	13	12	11	10	9	8	7	6	5	4	3	2	1	0
Id				A	A	A	A	A	A	A	A	A	A	A	A	A	A	A	A	A	A	A	A	A	A	A	A	A	A	A	A	A	A	A	A
Reset 0x00000000				**0**	**0**	**0**	**0**	**0**	**0**	**0**	**0**	**0**	**0**	**0**	**0**	**0**	**0**	**0**	**0**	**0**	**0**	**0**	**0**	**0**	**0**	**0**	**0**	**0**	**0**	**0**	**0**	**0**	**0**	**0**	**0**
Id	**RW**	**Field**	**Value Id**	**Value**								**Description**																							
A	RW	PTR										Transmit buffer Data RAM start address. When transmitting, words containing samples will be fetched from this address. This address is a word aligned Data RAM address.																							

44.10.17 RXTXD.MAXCNT

Address offset: 0x550

Size of RXD and TXD buffers.

Bit number				31	30	29	28	27	26	25	24	23	22	21	20	19	18	17	16	15	14	13	12	11	10	9	8	7	6	5	4	3	2	1	0
Id																						A	A	A	A	A	A	A	A	A	A	A	A	A	A
Reset 0x00000000				**0**	**0**	**0**	**0**	**0**	**0**	**0**	**0**	**0**	**0**	**0**	**0**	**0**	**0**	**0**	**0**	**0**	**0**	**0**	**0**	**0**	**0**	**0**	**0**	**0**	**0**	**0**	**0**	**0**	**0**	**0**	**0**
Id	**RW**	**Field**	**Value Id**	**Value**								**Description**																							
A	RW	MAXCNT										Size of RXD and TXD buffers in number of 32 bit words.																							

44.10.18 PSEL.MCK

Address offset: 0x560

Pin select for MCK signal.

Bit number				31	30	29	28	27	26	25	24	23	22	21	20	19	18	17	16	15	14	13	12	11	10	9	8	7	6	5	4	3	2	1	0
Id				C																											A	A	A	A	A
Reset 0xFFFFFFFF				**1**	**1**	**1**	**1**	**1**	**1**	**1**	**1**	**1**	**1**	**1**	**1**	**1**	**1**	**1**	**1**	**1**	**1**	**1**	**1**	**1**	**1**	**1**	**1**	**1**	**1**	**1**	**1**	**1**	**1**	**1**	**1**
Id	**RW**	**Field**	**Value Id**	**Value**								**Description**																							
A	RW	PIN		[0..31]								Pin number																							
C	RW	CONNECT										Connection																							
			Disconnected	1								Disconnect																							
			Connected	0								Connect																							

44.10.19 PSEL.SCK

Address offset: 0x564

Pin select for SCK signal.

Bit number				31	30	29	28	27	26	25	24	23	22	21	20	19	18	17	16	15	14	13	12	11	10	9	8	7	6	5	4	3	2	1	0
Id				C																											A	A	A	A	A
Reset 0xFFFFFFFF				**1**	**1**	**1**	**1**	**1**	**1**	**1**	**1**	**1**	**1**	**1**	**1**	**1**	**1**	**1**	**1**	**1**	**1**	**1**	**1**	**1**	**1**	**1**	**1**	**1**	**1**	**1**	**1**	**1**	**1**	**1**	**1**
Id	**RW**	**Field**	**Value Id**	**Value**								**Description**																							
A	RW	PIN		[0..31]								Pin number																							
C	RW	CONNECT										Connection																							
			Disconnected	1								Disconnect																							
			Connected	0								Connect																							

44.10.20 PSEL.LRCK

Address offset: 0x568

Pin select for LRCK signal.

Bit number				31	30	29	28	27	26	25	24	23	22	21	20	19	18	17	16	15	14	13	12	11	10	9	8	7	6	5	4	3	2	1	0
Id				C																											A	A	A	A	A
Reset 0xFFFFFFFF				**1**	**1**	**1**	**1**	**1**	**1**	**1**	**1**	**1**	**1**	**1**	**1**	**1**	**1**	**1**	**1**	**1**	**1**	**1**	**1**	**1**	**1**	**1**	**1**	**1**	**1**	**1**	**1**	**1**	**1**	**1**	**1**
Id	**RW**	**Field**	**Value Id**	**Value**								**Description**																							
A	RW	PIN		[0..31]								Pin number																							
C	RW	CONNECT										Connection																							
			Disconnected	1								Disconnect																							
			Connected	0								Connect																							

44.10.21 PSEL.SDIN

Address offset: 0x56C

Pin select for SDIN signal.

Bit number				31	30	29	28	27	26	25	24	23	22	21	20	19	18	17	16	15	14	13	12	11	10	9	8	7	6	5	4	3	2	1	0
Id				C																											A	A	A	A	A
Reset 0xFFFFFFFF				**1**	**1**	**1**	**1**	**1**	**1**	**1**	**1**	**1**	**1**	**1**	**1**	**1**	**1**	**1**	**1**	**1**	**1**	**1**	**1**	**1**	**1**	**1**	**1**	**1**	**1**	**1**	**1**	**1**	**1**	**1**	**1**
Id	**RW**	**Field**	**Value Id**	**Value**								**Description**																							
A	RW	PIN		[0..31]								Pin number																							
C	RW	CONNECT										Connection																							
			Disconnected	1								Disconnect																							
			Connected	0								Connect																							

44.10.22 PSEL.SDOUT

Address offset: 0x570

Pin select for SDOUT signal.

Bit number				31	30	29	28	27	26	25	24	23	22	21	20	19	18	17	16	15	14	13	12	11	10	9	8	7	6	5	4	3	2	1	0
Id				C																											A	A	A	A	A
Reset 0xFFFFFFFF				**1**	**1**	**1**	**1**	**1**	**1**	**1**	**1**	**1**	**1**	**1**	**1**	**1**	**1**	**1**	**1**	**1**	**1**	**1**	**1**	**1**	**1**	**1**	**1**	**1**	**1**	**1**	**1**	**1**	**1**	**1**	**1**
Id	**RW**	**Field**	**Value Id**	**Value**								**Description**																							
A	RW	PIN		[0..31]								Pin number																							
C	RW	CONNECT										Connection																							
			Disconnected	1								Disconnect																							
			Connected	0								Connect																							

44.11 Electrical Specification

44.11.1 I2S timing specification

Symbol	Description	Min.	Typ.	Max.	Units
t_{S_SDIN}	SDIN setup time before SCK rising	20			ns
t_{H_SDIN}	SDIN hold time after SCK rising	15			ns
t_{S_SDOUT}	SDOUT setup time after SCK falling	40			ns
t_{H_SDOUT}	SDOUT hold time before SCK falling	6			ns
t_{SCK_LRCK}	SCLK falling to LRCK edge	-5	0	5	ns
f_{MCK}	MCK frequency			4000	kHz
f_{LRCK}	LRCK frequency			48	kHz
f_{SCK}	SCK frequency			2000	kHz
DC_{CK}	Clock duty cycle (MCK, LRCK, SCK)	45		55	%

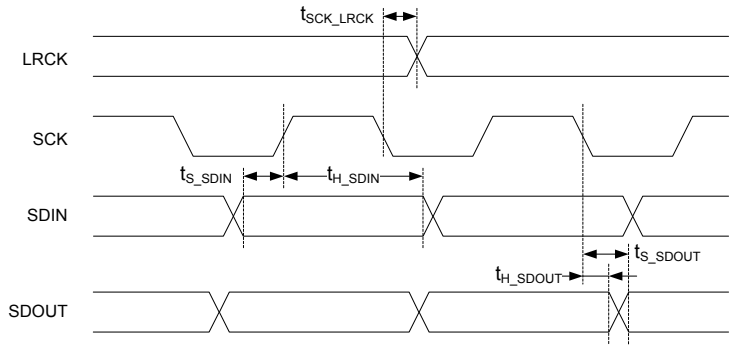

Figure 139: I2S timing diagram

45 MWU — Memory watch unit

The Memory watch unit (MWU) can be used to generate events when a memory region is accessed by the CPU. The MWU can be configured to trigger events for access to Data RAM and Peripheral memory segments. The MWU allows an application developer to generate memory access events during development for debugging or during production execution for failure detection and recovery.

Listed here are the main features for MWU:

- Six memory regions, four user-configurable and two fixed regions in peripheral address space
- Flexible configuration of regions with START and END addresses
- Generate events on CPU read and/or write to a defined region of Data RAM or peripheral memory address space
- Programmable maskable or non-maskable (NMI) interrupt on events
- Peripheral interfaces can be watched for read and write access using subregions of the two fixed memory regions

Table 106: Memory regions

Memory region	START address	END address
REGION[0..3]	Configurable	Configurable
PREGION[0]	0x40000000	0x4001FFFF
PREGION[1]	0x40020000	0x4003FFFF

Each MWU region is defined by a start address and an end address, configured by the START and END registers respectively. These addresses are byte aligned and inclusive. The END register value has to be greater or equal to the START register value. Each region is associated with a pair of events that indicate that either a write access or a read access from the CPU has been detected inside the region.

For regions containing subregions (see below), a set of status registers PERREGION[0..1].SUBSTATWA and PERREGION[0..1].SUBSTATRA indicate which subregion(s) caused the EVENT_PREGION[0..1].WA and EVENT_PREGION[0..1].RA respectively.

The MWU is only able to detect memory accesses in the Data RAM and Peripheral memory segments from the CPU, see *Memory* on page 20 for more information about the different memory segments. EasyDMA accesses are not monitored by the MWU. The MWU requires two HCLK cycles to detect and generate the event.

The peripheral regions, PREGION[0...1], are divided into 32 equally sized subregions, SR[0...31]. All subregions are excluded in the main region by default, and any can be included by specifying them in the SUBS register. When a subregion is excluded from the main region, the memory watch mechanism will not trigger any events when that subregion is accessed.

Subregions in PREGION[0..1] cannot be individually configured for read or write access watch. Watch configuration is only possible for a region as a whole. The PRGNiRA and PRGNiWA (i=0..1) fields in the REGIONEN register control watching read and write access.

REGION[0..3] can be individually enabled for read and/or write access watching through their respective RGNiRA and RGNiWA (i=0..3) fields in the REGIONEN register.

REGIONENSET and REGIONENCLR allow respectively enabling and disabling one or multiple REGIONs or PREGIONs watching in a single write access.

45.1 Registers

Table 107: Instances

Base address	Peripheral	Instance	Description	Configuration
0x40020000	MWU	MWU	Memory Watch Unit	

Table 108: Register Overview

Register	Offset	Description
EVENTS_REGION[0].WA	0x100	Write access to region 0 detected
EVENTS_REGION[0].RA	0x104	Read access to region 0 detected
EVENTS_REGION[1].WA	0x108	Write access to region 1 detected
EVENTS_REGION[1].RA	0x10C	Read access to region 1 detected
EVENTS_REGION[2].WA	0x110	Write access to region 2 detected
EVENTS_REGION[2].RA	0x114	Read access to region 2 detected
EVENTS_REGION[3].WA	0x118	Write access to region 3 detected
EVENTS_REGION[3].RA	0x11C	Read access to region 3 detected
EVENTS_PREGION[0].WA	0x160	Write access to peripheral region 0 detected
EVENTS_PREGION[0].RA	0x164	Read access to peripheral region 0 detected
EVENTS_PREGION[1].WA	0x168	Write access to peripheral region 1 detected
EVENTS_PREGION[1].RA	0x16C	Read access to peripheral region 1 detected
INTEN	0x300	Enable or disable interrupt
INTENSET	0x304	Enable interrupt
INTENCLR	0x308	Disable interrupt
NMIEN	0x320	Enable or disable non-maskable interrupt
NMIENSET	0x324	Enable non-maskable interrupt
NMIENCLR	0x328	Disable non-maskable interrupt
PERREGION[0].SUBSTAT	0x400	Source of event/interrupt in region 0, write access detected while corresponding subregion was enabled for watching
PERREGION[0].SUBSTAT	0x404	Source of event/interrupt in region 0, read access detected while corresponding subregion was enabled for watching
PERREGION[1].SUBSTAT	0x408	Source of event/interrupt in region 1, write access detected while corresponding subregion was enabled for watching
PERREGION[1].SUBSTAT	0x40C	Source of event/interrupt in region 1, read access detected while corresponding subregion was enabled for watching
REGIONEN	0x510	Enable/disable regions watch
REGIONENSET	0x514	Enable regions watch
REGIONENCLR	0x518	Disable regions watch
REGION[0].START	0x600	Start address for region 0
REGION[0].END	0x604	End address of region 0
REGION[1].START	0x610	Start address for region 1
REGION[1].END	0x614	End address of region 1
REGION[2].START	0x620	Start address for region 2
REGION[2].END	0x624	End address of region 2
REGION[3].START	0x630	Start address for region 3
REGION[3].END	0x634	End address of region 3
PREGION[0].START	0x6C0	Reserved for future use
PREGION[0].END	0x6C4	Reserved for future use
PREGION[0].SUBS	0x6C8	Subregions of region 0
PREGION[1].START	0x6D0	Reserved for future use
PREGION[1].END	0x6D4	Reserved for future use
PREGION[1].SUBS	0x6D8	Subregions of region 1

45.1.1 INTEN

Address offset: 0x300

Enable or disable interrupt

Bit number	31	30	29	28	27	26	25	24	23	22	21	20	19	18	17	16	15	14	13	12	11	10	9	8	7	6	5	4	3	2	1	0
Id					L	K	J	I																	H	G	F	E	D	C	B	A
Reset 0x00000000	**0**	**0**	**0**	**0**	**0**	**0**	**0**	**0**	**0**	**0**	**0**	**0**	**0**	**0**	**0**	**0**	**0**	**0**	**0**	**0**	**0**	**0**	**0**	**0**	**0**	**0**	**0**	**0**	**0**	**0**	**0**	**0**

Id	RW	Field	Value Id	Value	Description
A	RW	REGION0WA			Enable or disable interrupt for REGION[0].WA event See *EVENTS_REGION[0].WA*
			Disabled	0	Disable

Bit number				31	30	29	28	27	26	25	24	23	22	21	20	19	18	17	16	15	14	13	12	11	10	9	8	7	6	5	4	3	2	1	0
Id								L	K	J	I																	H	G	F	E	D	C	B	A
Reset 0x00000000				**0**	**0**	**0**	**0**	**0**	**0**	**0**	**0**	**0**	**0**	**0**	**0**	**0**	**0**	**0**	**0**	**0**	**0**	**0**	**0**	**0**	**0**	**0**	**0**	**0**	**0**	**0**	**0**	**0**	**0**	**0**	**0**
Id	**RW**	**Field**	**Value Id**	**Value**								**Description**																							
			Enabled	1								Enable																							
B	RW	REGION0RA										Enable or disable interrupt for REGION[0].RA event See *EVENTS_REGION[0].RA*																							
			Disabled	0								Disable																							
			Enabled	1								Enable																							
C	RW	REGION1WA										Enable or disable interrupt for REGION[1].WA event See *EVENTS_REGION[1].WA*																							
			Disabled	0								Disable																							
			Enabled	1								Enable																							
D	RW	REGION1RA										Enable or disable interrupt for REGION[1].RA event See *EVENTS_REGION[1].RA*																							
			Disabled	0								Disable																							
			Enabled	1								Enable																							
E	RW	REGION2WA										Enable or disable interrupt for REGION[2].WA event See *EVENTS_REGION[2].WA*																							
			Disabled	0								Disable																							
			Enabled	1								Enable																							
F	RW	REGION2RA										Enable or disable interrupt for REGION[2].RA event See *EVENTS_REGION[2].RA*																							
			Disabled	0								Disable																							
			Enabled	1								Enable																							
G	RW	REGION3WA										Enable or disable interrupt for REGION[3].WA event See *EVENTS_REGION[3].WA*																							
			Disabled	0								Disable																							
			Enabled	1								Enable																							
H	RW	REGION3RA										Enable or disable interrupt for REGION[3].RA event See *EVENTS_REGION[3].RA*																							
			Disabled	0								Disable																							
			Enabled	1								Enable																							
I	RW	PREGION0WA										Enable or disable interrupt for PREGION[0].WA event See *EVENTS_PREGION[0].WA*																							
			Disabled	0								Disable																							
			Enabled	1								Enable																							
J	RW	PREGION0RA										Enable or disable interrupt for PREGION[0].RA event See *EVENTS_PREGION[0].RA*																							
			Disabled	0								Disable																							
			Enabled	1								Enable																							
K	RW	PREGION1WA										Enable or disable interrupt for PREGION[1].WA event See *EVENTS_PREGION[1].WA*																							
			Disabled	0								Disable																							
			Enabled	1								Enable																							
L	RW	PREGION1RA										Enable or disable interrupt for PREGION[1].RA event See *EVENTS_PREGION[1].RA*																							
			Disabled	0								Disable																							
			Enabled	1								Enable																							

45.1.2 INTENSET

Address offset: 0x304

Enable interrupt

Bit number				31	30	29	28	27	26	25	24	23	22	21	20	19	18	17	16	15	14	13	12	11	10	9	8	7	6	5	4	3	2	1	0
Id								L	K	J	I																	H	G	F	E	D	C	B	A
Reset 0x00000000				**0**	**0**	**0**	**0**	**0**	**0**	**0**	**0**	**0**	**0**	**0**	**0**	**0**	**0**	**0**	**0**	**0**	**0**	**0**	**0**	**0**	**0**	**0**	**0**	**0**	**0**	**0**	**0**	**0**	**0**	**0**	**0**
Id	**RW**	**Field**	**Value Id**	**Value**								**Description**																							
A	RW	REGION0WA										Write '1' to Enable interrupt for REGION[0].WA event See *EVENTS_REGION[0].WA*																							
			Set	1								Enable																							
			Disabled	0								Read: Disabled																							
			Enabled	1								Read: Enabled																							
B	RW	REGION0RA										Write '1' to Enable interrupt for REGION[0].RA event See *EVENTS_REGION[0].RA*																							
			Set	1								Enable																							
			Disabled	0								Read: Disabled																							
			Enabled	1								Read: Enabled																							
C	RW	REGION1WA										Write '1' to Enable interrupt for REGION[1].WA event See *EVENTS_REGION[1].WA*																							
			Set	1								Enable																							
			Disabled	0								Read: Disabled																							
			Enabled	1								Read: Enabled																							
D	RW	REGION1RA										Write '1' to Enable interrupt for REGION[1].RA event See *EVENTS_REGION[1].RA*																							
			Set	1								Enable																							
			Disabled	0								Read: Disabled																							
			Enabled	1								Read: Enabled																							
E	RW	REGION2WA										Write '1' to Enable interrupt for REGION[2].WA event See *EVENTS_REGION[2].WA*																							
			Set	1								Enable																							
			Disabled	0								Read: Disabled																							
			Enabled	1								Read: Enabled																							
F	RW	REGION2RA										Write '1' to Enable interrupt for REGION[2].RA event See *EVENTS_REGION[2].RA*																							
			Set	1								Enable																							
			Disabled	0								Read: Disabled																							
			Enabled	1								Read: Enabled																							
G	RW	REGION3WA										Write '1' to Enable interrupt for REGION[3].WA event See *EVENTS_REGION[3].WA*																							
			Set	1								Enable																							
			Disabled	0								Read: Disabled																							
			Enabled	1								Read: Enabled																							
H	RW	REGION3RA										Write '1' to Enable interrupt for REGION[3].RA event See *EVENTS_REGION[3].RA*																							
			Set	1								Enable																							
			Disabled	0								Read: Disabled																							
			Enabled	1								Read: Enabled																							
I	RW	PREGION0WA										Write '1' to Enable interrupt for PREGION[0].WA event See *EVENTS_PREGION[0].WA*																							
			Set	1								Enable																							
			Disabled	0								Read: Disabled																							
			Enabled	1								Read: Enabled																							
J	RW	PREGION0RA										Write '1' to Enable interrupt for PREGION[0].RA event See *EVENTS_PREGION[0].RA*																							
			Set	1								Enable																							
			Disabled	0								Read: Disabled																							
			Enabled	1								Read: Enabled																							
K	RW	PREGION1WA										Write '1' to Enable interrupt for PREGION[1].WA event																							

Bit number				31	30	29	28	27	26	25	24	23	22	21	20	19	18	17	16	15	14	13	12	11	10	9	8	7	6	5	4	3	2	1	0
Id								L	K	J	I																	H	G	F	E	D	C	B	A
Reset 0x00000000				**0**	**0**	**0**	**0**	**0**	**0**	**0**	**0**	**0**	**0**	**0**	**0**	**0**	**0**	**0**	**0**	**0**	**0**	**0**	**0**	**0**	**0**	**0**	**0**	**0**	**0**	**0**	**0**	**0**	**0**	**0**	**0**
Id	**RW**	**Field**	**Value Id**	**Value**								**Description**																							
												See *EVENTS_PREGION[1].WA*																							
			Set	1								Enable																							
			Disabled	0								Read: Disabled																							
			Enabled	1								Read: Enabled																							
L	RW	PREGION1RA										Write '1' to Enable interrupt for PREGION[1].RA event See *EVENTS_PREGION[1].RA*																							
			Set	1								Enable																							
			Disabled	0								Read: Disabled																							
			Enabled	1								Read: Enabled																							

45.1.3 INTENCLR

Address offset: 0x308

Disable interrupt

Bit number				31	30	29	28	27	26	25	24	23	22	21	20	19	18	17	16	15	14	13	12	11	10	9	8	7	6	5	4	3	2	1	0
Id								L	K	J	I																	H	G	F	E	D	C	B	A
Reset 0x00000000				**0**	**0**	**0**	**0**	**0**	**0**	**0**	**0**	**0**	**0**	**0**	**0**	**0**	**0**	**0**	**0**	**0**	**0**	**0**	**0**	**0**	**0**	**0**	**0**	**0**	**0**	**0**	**0**	**0**	**0**	**0**	**0**
Id	**RW**	**Field**	**Value Id**	**Value**								**Description**																							
A	RW	REGION0WA										Write '1' to Disable interrupt for REGION[0].WA event See *EVENTS_REGION[0].WA*																							
			Clear	1								Disable																							
			Disabled	0								Read: Disabled																							
			Enabled	1								Read: Enabled																							
B	RW	REGION0RA										Write '1' to Disable interrupt for REGION[0].RA event See *EVENTS_REGION[0].RA*																							
			Clear	1								Disable																							
			Disabled	0								Read: Disabled																							
			Enabled	1								Read: Enabled																							
C	RW	REGION1WA										Write '1' to Disable interrupt for REGION[1].WA event See *EVENTS_REGION[1].WA*																							
			Clear	1								Disable																							
			Disabled	0								Read: Disabled																							
			Enabled	1								Read: Enabled																							
D	RW	REGION1RA										Write '1' to Disable interrupt for REGION[1].RA event See *EVENTS_REGION[1].RA*																							
			Clear	1								Disable																							
			Disabled	0								Read: Disabled																							
			Enabled	1								Read: Enabled																							
E	RW	REGION2WA										Write '1' to Disable interrupt for REGION[2].WA event See *EVENTS_REGION[2].WA*																							
			Clear	1								Disable																							
			Disabled	0								Read: Disabled																							
			Enabled	1								Read: Enabled																							
F	RW	REGION2RA										Write '1' to Disable interrupt for REGION[2].RA event See *EVENTS_REGION[2].RA*																							
			Clear	1								Disable																							
			Disabled	0								Read: Disabled																							
			Enabled	1								Read: Enabled																							
G	RW	REGION3WA										Write '1' to Disable interrupt for REGION[3].WA event See *EVENTS_REGION[3].WA*																							
			Clear	1								Disable																							

Bit number				31	30	29	28	27	26	25	24	23	22	21	20	19	18	17	16	15	14	13	12	11	10	9	8	7	6	5	4	3	2	1	0
Id								L	K	J	I																	H	G	F	E	D	C	B	A
Reset 0x00000000				**0**	**0**	**0**	**0**	**0**	**0**	**0**	**0**	**0**	**0**	**0**	**0**	**0**	**0**	**0**	**0**	**0**	**0**	**0**	**0**	**0**	**0**	**0**	**0**	**0**	**0**	**0**	**0**	**0**	**0**	**0**	**0**
Id	**RW**	**Field**	**Value Id**	**Value**								**Description**																							
			Disabled	0								Read: Disabled																							
			Enabled	1								Read: Enabled																							
H	RW	REGION3RA										Write '1' to Disable interrupt for REGION[3].RA event See *EVENTS_REGION[3].RA*																							
			Clear	1								Disable																							
			Disabled	0								Read: Disabled																							
			Enabled	1								Read: Enabled																							
I	RW	PREGION0WA										Write '1' to Disable interrupt for PREGION[0].WA event See *EVENTS_PREGION[0].WA*																							
			Clear	1								Disable																							
			Disabled	0								Read: Disabled																							
			Enabled	1								Read: Enabled																							
J	RW	PREGION0RA										Write '1' to Disable interrupt for PREGION[0].RA event See *EVENTS_PREGION[0].RA*																							
			Clear	1								Disable																							
			Disabled	0								Read: Disabled																							
			Enabled	1								Read: Enabled																							
K	RW	PREGION1WA										Write '1' to Disable interrupt for PREGION[1].WA event See *EVENTS_PREGION[1].WA*																							
			Clear	1								Disable																							
			Disabled	0								Read: Disabled																							
			Enabled	1								Read: Enabled																							
L	RW	PREGION1RA										Write '1' to Disable interrupt for PREGION[1].RA event See *EVENTS_PREGION[1].RA*																							
			Clear	1								Disable																							
			Disabled	0								Read: Disabled																							
			Enabled	1								Read: Enabled																							

45.1.4 NMIEN

Address offset: 0x320

Enable or disable non-maskable interrupt

Bit number				31	30	29	28	27	26	25	24	23	22	21	20	19	18	17	16	15	14	13	12	11	10	9	8	7	6	5	4	3	2	1	0
Id								L	K	J	I																	H	G	F	E	D	C	B	A
Reset 0x00000000				**0**	**0**	**0**	**0**	**0**	**0**	**0**	**0**	**0**	**0**	**0**	**0**	**0**	**0**	**0**	**0**	**0**	**0**	**0**	**0**	**0**	**0**	**0**	**0**	**0**	**0**	**0**	**0**	**0**	**0**	**0**	**0**
Id	**RW**	**Field**	**Value Id**	**Value**								**Description**																							
A	RW	REGION0WA										Enable or disable non-maskable interrupt for REGION[0].WA event See *EVENTS_REGION[0].WA*																							
			Disabled	0								Disable																							
			Enabled	1								Enable																							
B	RW	REGION0RA										Enable or disable non-maskable interrupt for REGION[0].RA event See *EVENTS_REGION[0].RA*																							
			Disabled	0								Disable																							
			Enabled	1								Enable																							
C	RW	REGION1WA										Enable or disable non-maskable interrupt for REGION[1].WA event See *EVENTS_REGION[1].WA*																							
			Disabled	0								Disable																							
			Enabled	1								Enable																							

Bit number	31	30	29	28	27	26	25	24	23	22	21	20	19	18	17	16	15	14	13	12	11	10	9	8	7	6	5	4	3	2	1	0
Id					L	K	J	I																	H	G	F	E	D	C	B	A
Reset 0x00000000	**0**	**0**	**0**	**0**	**0**	**0**	**0**	**0**	**0**	**0**	**0**	**0**	**0**	**0**	**0**	**0**	**0**	**0**	**0**	**0**	**0**	**0**	**0**	**0**	**0**	**0**	**0**	**0**	**0**	**0**	**0**	**0**

Id	RW	Field	Value Id	Value	Description
D	RW	REGION1RA			Enable or disable non-maskable interrupt for REGION[1].RA event See *EVENTS_REGION[1].RA*
			Disabled	0	Disable
			Enabled	1	Enable
E	RW	REGION2WA			Enable or disable non-maskable interrupt for REGION[2].WA event See *EVENTS_REGION[2].WA*
			Disabled	0	Disable
			Enabled	1	Enable
F	RW	REGION2RA			Enable or disable non-maskable interrupt for REGION[2].RA event See *EVENTS_REGION[2].RA*
			Disabled	0	Disable
			Enabled	1	Enable
G	RW	REGION3WA			Enable or disable non-maskable interrupt for REGION[3].WA event See *EVENTS_REGION[3].WA*
			Disabled	0	Disable
			Enabled	1	Enable
H	RW	REGION3RA			Enable or disable non-maskable interrupt for REGION[3].RA event See *EVENTS_REGION[3].RA*
			Disabled	0	Disable
			Enabled	1	Enable
I	RW	PREGION0WA			Enable or disable non-maskable interrupt for PREGION[0].WA event See *EVENTS_PREGION[0].WA*
			Disabled	0	Disable
			Enabled	1	Enable
J	RW	PREGION0RA			Enable or disable non-maskable interrupt for PREGION[0].RA event See *EVENTS_PREGION[0].RA*
			Disabled	0	Disable
			Enabled	1	Enable
K	RW	PREGION1WA			Enable or disable non-maskable interrupt for PREGION[1].WA event See *EVENTS_PREGION[1].WA*
			Disabled	0	Disable
			Enabled	1	Enable
L	RW	PREGION1RA			Enable or disable non-maskable interrupt for PREGION[1].RA event See *EVENTS_PREGION[1].RA*
			Disabled	0	Disable
			Enabled	1	Enable

45.1.5 NMIENSET

Address offset: 0x324

Enable non-maskable interrupt

Bit number				31	30	29	28	27	26	25	24	23	22	21	20	19	18	17	16	15	14	13	12	11	10	9	8	7	6	5	4	3	2	1	0
Id								L	K	J	I																	H	G	F	E	D	C	B	A
Reset 0x00000000				**0**	**0**	**0**	**0**	**0**	**0**	**0**	**0**	**0**	**0**	**0**	**0**	**0**	**0**	**0**	**0**	**0**	**0**	**0**	**0**	**0**	**0**	**0**	**0**	**0**	**0**	**0**	**0**	**0**	**0**	**0**	**0**
Id	**RW**	**Field**	**Value Id**	**Value**								**Description**																							
A	RW	REGION0WA										Write '1' to Enable non-maskable interrupt for REGION[0].WA event See *EVENTS_REGION[0].WA*																						
			Set	1								Enable																							
			Disabled	0								Read: Disabled																							
			Enabled	1								Read: Enabled																							
B	RW	REGION0RA										Write '1' to Enable non-maskable interrupt for REGION[0].RA event See *EVENTS_REGION[0].RA*																						
			Set	1								Enable																							
			Disabled	0								Read: Disabled																							
			Enabled	1								Read: Enabled																							
C	RW	REGION1WA										Write '1' to Enable non-maskable interrupt for REGION[1].WA event See *EVENTS_REGION[1].WA*																						
			Set	1								Enable																							
			Disabled	0								Read: Disabled																							
			Enabled	1								Read: Enabled																							
D	RW	REGION1RA										Write '1' to Enable non-maskable interrupt for REGION[1].RA event See *EVENTS_REGION[1].RA*																						
			Set	1								Enable																							
			Disabled	0								Read: Disabled																							
			Enabled	1								Read: Enabled																							
E	RW	REGION2WA										Write '1' to Enable non-maskable interrupt for REGION[2].WA event See *EVENTS_REGION[2].WA*																						
			Set	1								Enable																							
			Disabled	0								Read: Disabled																							
			Enabled	1								Read: Enabled																							
F	RW	REGION2RA										Write '1' to Enable non-maskable interrupt for REGION[2].RA event See *EVENTS_REGION[2].RA*																						
			Set	1								Enable																							
			Disabled	0								Read: Disabled																							
			Enabled	1								Read: Enabled																							
G	RW	REGION3WA										Write '1' to Enable non-maskable interrupt for REGION[3].WA event See *EVENTS_REGION[3].WA*																						
			Set	1								Enable																							
			Disabled	0								Read: Disabled																							
			Enabled	1								Read: Enabled																							
H	RW	REGION3RA										Write '1' to Enable non-maskable interrupt for REGION[3].RA event See *EVENTS_REGION[3].RA*																						
			Set	1								Enable																							
			Disabled	0								Read: Disabled																							
			Enabled	1								Read: Enabled																							
I	RW	PREGION0WA										Write '1' to Enable non-maskable interrupt for PREGION[0].WA event See *EVENTS_PREGION[0].WA*																						

Bit number				31	30	29	28	27	26	25	24	23	22	21	20	19	18	17	16	15	14	13	12	11	10	9	8	7	6	5	4	3	2	1	0
Id								L	K	J	I																	H	G	F	E	D	C	B	A
Reset 0x00000000				**0**	**0**	**0**	**0**	**0**	**0**	**0**	**0**	**0**	**0**	**0**	**0**	**0**	**0**	**0**	**0**	**0**	**0**	**0**	**0**	**0**	**0**	**0**	**0**	**0**	**0**	**0**	**0**	**0**	**0**	**0**	**0**
Id	**RW**	**Field**	**Value Id**	**Value**								**Description**																							
			Set	1								Enable																							
			Disabled	0								Read: Disabled																							
			Enabled	1								Read: Enabled																							
J	RW	PREGION0RA										Write '1' to Enable non-maskable interrupt for PREGION[0].RA event See *EVENTS_PREGION[0].RA*																							
			Set	1								Enable																							
			Disabled	0								Read: Disabled																							
			Enabled	1								Read: Enabled																							
K	RW	PREGION1WA										Write '1' to Enable non-maskable interrupt for PREGION[1].WA event See *EVENTS_PREGION[1].WA*																							
			Set	1								Enable																							
			Disabled	0								Read: Disabled																							
			Enabled	1								Read: Enabled																							
L	RW	PREGION1RA										Write '1' to Enable non-maskable interrupt for PREGION[1].RA event See *EVENTS_PREGION[1].RA*																							
			Set	1								Enable																							
			Disabled	0								Read: Disabled																							
			Enabled	1								Read: Enabled																							

45.1.6 NMIENCLR

Address offset: 0x328

Disable non-maskable interrupt

Bit number				31	30	29	28	27	26	25	24	23	22	21	20	19	18	17	16	15	14	13	12	11	10	9	8	7	6	5	4	3	2	1	0
Id								L	K	J	I																	H	G	F	E	D	C	B	A
Reset 0x00000000				**0**	**0**	**0**	**0**	**0**	**0**	**0**	**0**	**0**	**0**	**0**	**0**	**0**	**0**	**0**	**0**	**0**	**0**	**0**	**0**	**0**	**0**	**0**	**0**	**0**	**0**	**0**	**0**	**0**	**0**	**0**	**0**
Id	**RW**	**Field**	**Value Id**	**Value**								**Description**																							
A	RW	REGION0WA										Write '1' to Disable non-maskable interrupt for REGION[0].WA event See *EVENTS_REGION[0].WA*																							
			Clear	1								Disable																							
			Disabled	0								Read: Disabled																							
			Enabled	1								Read: Enabled																							
B	RW	REGION0RA										Write '1' to Disable non-maskable interrupt for REGION[0].RA event See *EVENTS_REGION[0].RA*																							
			Clear	1								Disable																							
			Disabled	0								Read: Disabled																							
			Enabled	1								Read: Enabled																							
C	RW	REGION1WA										Write '1' to Disable non-maskable interrupt for REGION[1].WA event See *EVENTS_REGION[1].WA*																							
			Clear	1								Disable																							
			Disabled	0								Read: Disabled																							
			Enabled	1								Read: Enabled																							
D	RW	REGION1RA										Write '1' to Disable non-maskable interrupt for REGION[1].RA event See *EVENTS_REGION[1].RA*																							

Bit number				31	30	29	28	27	26	25	24	23	22	21	20	19	18	17	16	15	14	13	12	11	10	9	8	7	6	5	4	3	2	1	0
Id								L	K	J	I																	H	G	F	E	D	C	B	A
Reset 0x00000000				**0**	**0**	**0**	**0**	**0**	**0**	**0**	**0**	**0**	**0**	**0**	**0**	**0**	**0**	**0**	**0**	**0**	**0**	**0**	**0**	**0**	**0**	**0**	**0**	**0**	**0**	**0**	**0**	**0**	**0**	**0**	**0**
Id	**RW**	**Field**	**Value Id**	**Value**								**Description**																							
			Clear	1								Disable																							
			Disabled	0								Read: Disabled																							
			Enabled	1								Read: Enabled																							
E	RW	REGION2WA										Write '1' to Disable non-maskable interrupt for REGION[2].WA event See *EVENTS_REGION[2].WA*																							
			Clear	1								Disable																							
			Disabled	0								Read: Disabled																							
			Enabled	1								Read: Enabled																							
F	RW	REGION2RA										Write '1' to Disable non-maskable interrupt for REGION[2].RA event See *EVENTS_REGION[2].RA*																							
			Clear	1								Disable																							
			Disabled	0								Read: Disabled																							
			Enabled	1								Read: Enabled																							
G	RW	REGION3WA										Write '1' to Disable non-maskable interrupt for REGION[3].WA event See *EVENTS_REGION[3].WA*																							
			Clear	1								Disable																							
			Disabled	0								Read: Disabled																							
			Enabled	1								Read: Enabled																							
H	RW	REGION3RA										Write '1' to Disable non-maskable interrupt for REGION[3].RA event See *EVENTS_REGION[3].RA*																							
			Clear	1								Disable																							
			Disabled	0								Read: Disabled																							
			Enabled	1								Read: Enabled																							
I	RW	PREGION0WA										Write '1' to Disable non-maskable interrupt for PREGION[0].WA event See *EVENTS_PREGION[0].WA*																							
			Clear	1								Disable																							
			Disabled	0								Read: Disabled																							
			Enabled	1								Read: Enabled																							
J	RW	PREGION0RA										Write '1' to Disable non-maskable interrupt for PREGION[0].RA event See *EVENTS_PREGION[0].RA*																							
			Clear	1								Disable																							
			Disabled	0								Read: Disabled																							
			Enabled	1								Read: Enabled																							
K	RW	PREGION1WA										Write '1' to Disable non-maskable interrupt for PREGION[1].WA event See *EVENTS_PREGION[1].WA*																							
			Clear	1								Disable																							
			Disabled	0								Read: Disabled																							
			Enabled	1								Read: Enabled																							
L	RW	PREGION1RA										Write '1' to Disable non-maskable interrupt for PREGION[1].RA event See *EVENTS_PREGION[1].RA*																							
			Clear	1								Disable																							
			Disabled	0								Read: Disabled																							
			Enabled	1								Read: Enabled																							

45.1.7 PERREGION[0].SUBSTATWA

Address offset: 0x400

Source of event/interrupt in region 0, write access detected while corresponding subregion was enabled for watching

Bit number	31	30	29	28	27	26	25	24	23	22	21	20	19	18	17	16	15	14	13	12	11	10	9	8	7	6	5	4	3	2	1	0
Id	f	e	d	c	b	a	Z	Y	X	W	V	U	T	S	R	Q	P	O	N	M	L	K	J	I	H	G	F	E	D	C	B	A
Reset 0x00000000	**0**	**0**	**0**	**0**	**0**	**0**	**0**	**0**	**0**	**0**	**0**	**0**	**0**	**0**	**0**	**0**	**0**	**0**	**0**	**0**	**0**	**0**	**0**	**0**	**0**	**0**	**0**	**0**	**0**	**0**	**0**	**0**

Id	RW	Field	Value Id	Value	Description
A	RW	SR0			Subregion 0 in region 0 (write '1' to clear)
			NoAccess	0	No write access occurred in this subregion
			Access	1	Write access(es) occurred in this subregion
B	RW	SR1			Subregion 1 in region 0 (write '1' to clear)
			NoAccess	0	No write access occurred in this subregion
			Access	1	Write access(es) occurred in this subregion
C	RW	SR2			Subregion 2 in region 0 (write '1' to clear)
			NoAccess	0	No write access occurred in this subregion
			Access	1	Write access(es) occurred in this subregion
D	RW	SR3			Subregion 3 in region 0 (write '1' to clear)
			NoAccess	0	No write access occurred in this subregion
			Access	1	Write access(es) occurred in this subregion
E	RW	SR4			Subregion 4 in region 0 (write '1' to clear)
			NoAccess	0	No write access occurred in this subregion
			Access	1	Write access(es) occurred in this subregion
F	RW	SR5			Subregion 5 in region 0 (write '1' to clear)
			NoAccess	0	No write access occurred in this subregion
			Access	1	Write access(es) occurred in this subregion
G	RW	SR6			Subregion 6 in region 0 (write '1' to clear)
			NoAccess	0	No write access occurred in this subregion
			Access	1	Write access(es) occurred in this subregion
H	RW	SR7			Subregion 7 in region 0 (write '1' to clear)
			NoAccess	0	No write access occurred in this subregion
			Access	1	Write access(es) occurred in this subregion
I	RW	SR8			Subregion 8 in region 0 (write '1' to clear)
			NoAccess	0	No write access occurred in this subregion
			Access	1	Write access(es) occurred in this subregion
J	RW	SR9			Subregion 9 in region 0 (write '1' to clear)
			NoAccess	0	No write access occurred in this subregion
			Access	1	Write access(es) occurred in this subregion
K	RW	SR10			Subregion 10 in region 0 (write '1' to clear)
			NoAccess	0	No write access occurred in this subregion
			Access	1	Write access(es) occurred in this subregion
L	RW	SR11			Subregion 11 in region 0 (write '1' to clear)
			NoAccess	0	No write access occurred in this subregion
			Access	1	Write access(es) occurred in this subregion
M	RW	SR12			Subregion 12 in region 0 (write '1' to clear)
			NoAccess	0	No write access occurred in this subregion
			Access	1	Write access(es) occurred in this subregion
N	RW	SR13			Subregion 13 in region 0 (write '1' to clear)
			NoAccess	0	No write access occurred in this subregion
			Access	1	Write access(es) occurred in this subregion
O	RW	SR14			Subregion 14 in region 0 (write '1' to clear)
			NoAccess	0	No write access occurred in this subregion
			Access	1	Write access(es) occurred in this subregion
P	RW	SR15			Subregion 15 in region 0 (write '1' to clear)
			NoAccess	0	No write access occurred in this subregion
			Access	1	Write access(es) occurred in this subregion
Q	RW	SR16			Subregion 16 in region 0 (write '1' to clear)

Bit number				31	30	29	28	27	26	25	24	23	22	21	20	19	18	17	16	15	14	13	12	11	10	9	8	7	6	5	4	3	2	1	0
Id				f	e	d	c	b	a	Z	Y	X	W	V	U	T	S	R	Q	P	O	N	M	L	K	J	I	H	G	F	E	D	C	B	A
Reset 0x00000000				**0**	**0**	**0**	**0**	**0**	**0**	**0**	**0**	**0**	**0**	**0**	**0**	**0**	**0**	**0**	**0**	**0**	**0**	**0**	**0**	**0**	**0**	**0**	**0**	**0**	**0**	**0**	**0**	**0**	**0**	**0**	**0**
Id	**RW**	**Field**	**Value Id**	**Value**								**Description**																							
			NoAccess	0								No write access occurred in this subregion																							
			Access	1								Write access(es) occurred in this subregion																							
R	RW	SR17										Subregion 17 in region 0 (write '1' to clear)																							
			NoAccess	0								No write access occurred in this subregion																							
			Access	1								Write access(es) occurred in this subregion																							
S	RW	SR18										Subregion 18 in region 0 (write '1' to clear)																							
			NoAccess	0								No write access occurred in this subregion																							
			Access	1								Write access(es) occurred in this subregion																							
T	RW	SR19										Subregion 19 in region 0 (write '1' to clear)																							
			NoAccess	0								No write access occurred in this subregion																							
			Access	1								Write access(es) occurred in this subregion																							
U	RW	SR20										Subregion 20 in region 0 (write '1' to clear)																							
			NoAccess	0								No write access occurred in this subregion																							
			Access	1								Write access(es) occurred in this subregion																							
V	RW	SR21										Subregion 21 in region 0 (write '1' to clear)																							
			NoAccess	0								No write access occurred in this subregion																							
			Access	1								Write access(es) occurred in this subregion																							
W	RW	SR22										Subregion 22 in region 0 (write '1' to clear)																							
			NoAccess	0								No write access occurred in this subregion																							
			Access	1								Write access(es) occurred in this subregion																							
X	RW	SR23										Subregion 23 in region 0 (write '1' to clear)																							
			NoAccess	0								No write access occurred in this subregion																							
			Access	1								Write access(es) occurred in this subregion																							
Y	RW	SR24										Subregion 24 in region 0 (write '1' to clear)																							
			NoAccess	0								No write access occurred in this subregion																							
			Access	1								Write access(es) occurred in this subregion																							
Z	RW	SR25										Subregion 25 in region 0 (write '1' to clear)																							
			NoAccess	0								No write access occurred in this subregion																							
			Access	1								Write access(es) occurred in this subregion																							
a	RW	SR26										Subregion 26 in region 0 (write '1' to clear)																							
			NoAccess	0								No write access occurred in this subregion																							
			Access	1								Write access(es) occurred in this subregion																							
b	RW	SR27										Subregion 27 in region 0 (write '1' to clear)																							
			NoAccess	0								No write access occurred in this subregion																							
			Access	1								Write access(es) occurred in this subregion																							
c	RW	SR28										Subregion 28 in region 0 (write '1' to clear)																							
			NoAccess	0								No write access occurred in this subregion																							
			Access	1								Write access(es) occurred in this subregion																							
d	RW	SR29										Subregion 29 in region 0 (write '1' to clear)																							
			NoAccess	0								No write access occurred in this subregion																							
			Access	1								Write access(es) occurred in this subregion																							
e	RW	SR30										Subregion 30 in region 0 (write '1' to clear)																							
			NoAccess	0								No write access occurred in this subregion																							
			Access	1								Write access(es) occurred in this subregion																							
f	RW	SR31										Subregion 31 in region 0 (write '1' to clear)																							
			NoAccess	0								No write access occurred in this subregion																							
			Access	1								Write access(es) occurred in this subregion																							

45.1.8 PERREGION[0].SUBSTATRA

Address offset: 0x404

Source of event/interrupt in region 0, read access detected while corresponding subregion was enabled for watching

Bit number				31	30	29	28	27	26	25	24	23	22	21	20	19	18	17	16	15	14	13	12	11	10	9	8	7	6	5	4	3	2	1	0
Id				f	e	d	c	b	a	Z	Y	X	W	V	U	T	S	R	Q	P	O	N	M	L	K	J	I	H	G	F	E	D	C	B	A
Reset 0x00000000				**0**	**0**	**0**	**0**	**0**	**0**	**0**	**0**	**0**	**0**	**0**	**0**	**0**	**0**	**0**	**0**	**0**	**0**	**0**	**0**	**0**	**0**	**0**	**0**	**0**	**0**	**0**	**0**	**0**	**0**	**0**	**0**
Id	**RW**	**Field**	**Value Id**	**Value**																															**Description**
A	RW	SR0																																	Subregion 0 in region 0 (write '1' to clear)
			NoAccess	0																															No read access occurred in this subregion
			Access	1																															Read access(es) occurred in this subregion
B	RW	SR1																																	Subregion 1 in region 0 (write '1' to clear)
			NoAccess	0																															No read access occurred in this subregion
			Access	1																															Read access(es) occurred in this subregion
C	RW	SR2																																	Subregion 2 in region 0 (write '1' to clear)
			NoAccess	0																															No read access occurred in this subregion
			Access	1																															Read access(es) occurred in this subregion
D	RW	SR3																																	Subregion 3 in region 0 (write '1' to clear)
			NoAccess	0																															No read access occurred in this subregion
			Access	1																															Read access(es) occurred in this subregion
E	RW	SR4																																	Subregion 4 in region 0 (write '1' to clear)
			NoAccess	0																															No read access occurred in this subregion
			Access	1																															Read access(es) occurred in this subregion
F	RW	SR5																																	Subregion 5 in region 0 (write '1' to clear)
			NoAccess	0																															No read access occurred in this subregion
			Access	1																															Read access(es) occurred in this subregion
G	RW	SR6																																	Subregion 6 in region 0 (write '1' to clear)
			NoAccess	0																															No read access occurred in this subregion
			Access	1																															Read access(es) occurred in this subregion
H	RW	SR7																																	Subregion 7 in region 0 (write '1' to clear)
			NoAccess	0																															No read access occurred in this subregion
			Access	1																															Read access(es) occurred in this subregion
I	RW	SR8																																	Subregion 8 in region 0 (write '1' to clear)
			NoAccess	0																															No read access occurred in this subregion
			Access	1																															Read access(es) occurred in this subregion
J	RW	SR9																																	Subregion 9 in region 0 (write '1' to clear)
			NoAccess	0																															No read access occurred in this subregion
			Access	1																															Read access(es) occurred in this subregion
K	RW	SR10																																	Subregion 10 in region 0 (write '1' to clear)
			NoAccess	0																															No read access occurred in this subregion
			Access	1																															Read access(es) occurred in this subregion
L	RW	SR11																																	Subregion 11 in region 0 (write '1' to clear)
			NoAccess	0																															No read access occurred in this subregion
			Access	1																															Read access(es) occurred in this subregion
M	RW	SR12																																	Subregion 12 in region 0 (write '1' to clear)
			NoAccess	0																															No read access occurred in this subregion
			Access	1																															Read access(es) occurred in this subregion
N	RW	SR13																																	Subregion 13 in region 0 (write '1' to clear)
			NoAccess	0																															No read access occurred in this subregion
			Access	1																															Read access(es) occurred in this subregion
O	RW	SR14																																	Subregion 14 in region 0 (write '1' to clear)
			NoAccess	0																															No read access occurred in this subregion
			Access	1																															Read access(es) occurred in this subregion
P	RW	SR15																																	Subregion 15 in region 0 (write '1' to clear)
			NoAccess	0																															No read access occurred in this subregion
			Access	1																															Read access(es) occurred in this subregion
Q	RW	SR16																																	Subregion 16 in region 0 (write '1' to clear)
			NoAccess	0																															No read access occurred in this subregion
			Access	1																															Read access(es) occurred in this subregion
R	RW	SR17																																	Subregion 17 in region 0 (write '1' to clear)
			NoAccess	0																															No read access occurred in this subregion
			Access	1																															Read access(es) occurred in this subregion
S	RW	SR18																																	Subregion 18 in region 0 (write '1' to clear)

Bit number				31	30	29	28	27	26	25	24	23	22	21	20	19	18	17	16	15	14	13	12	11	10	9	8	7	6	5	4	3	2	1	0
Id				f	e	d	c	b	a	Z	Y	X	W	V	U	T	S	R	Q	P	O	N	M	L	K	J	I	H	G	F	E	D	C	B	A
Reset 0x00000000				**0**	**0**	**0**	**0**	**0**	**0**	**0**	**0**	**0**	**0**	**0**	**0**	**0**	**0**	**0**	**0**	**0**	**0**	**0**	**0**	**0**	**0**	**0**	**0**	**0**	**0**	**0**	**0**	**0**	**0**	**0**	**0**
Id	**RW**	**Field**		**Value Id**								**Value**																		**Description**						
				NoAccess								0																		No read access occurred in this subregion						
				Access								1																		Read access(es) occurred in this subregion						
T	RW	SR19																												Subregion 19 in region 0 (write '1' to clear)						
				NoAccess								0																		No read access occurred in this subregion						
				Access								1																		Read access(es) occurred in this subregion						
U	RW	SR20																												Subregion 20 in region 0 (write '1' to clear)						
				NoAccess								0																		No read access occurred in this subregion						
				Access								1																		Read access(es) occurred in this subregion						
V	RW	SR21																												Subregion 21 in region 0 (write '1' to clear)						
				NoAccess								0																		No read access occurred in this subregion						
				Access								1																		Read access(es) occurred in this subregion						
W	RW	SR22																												Subregion 22 in region 0 (write '1' to clear)						
				NoAccess								0																		No read access occurred in this subregion						
				Access								1																		Read access(es) occurred in this subregion						
X	RW	SR23																												Subregion 23 in region 0 (write '1' to clear)						
				NoAccess								0																		No read access occurred in this subregion						
				Access								1																		Read access(es) occurred in this subregion						
Y	RW	SR24																												Subregion 24 in region 0 (write '1' to clear)						
				NoAccess								0																		No read access occurred in this subregion						
				Access								1																		Read access(es) occurred in this subregion						
Z	RW	SR25																												Subregion 25 in region 0 (write '1' to clear)						
				NoAccess								0																		No read access occurred in this subregion						
				Access								1																		Read access(es) occurred in this subregion						
a	RW	SR26																												Subregion 26 in region 0 (write '1' to clear)						
				NoAccess								0																		No read access occurred in this subregion						
				Access								1																		Read access(es) occurred in this subregion						
b	RW	SR27																												Subregion 27 in region 0 (write '1' to clear)						
				NoAccess								0																		No read access occurred in this subregion						
				Access								1																		Read access(es) occurred in this subregion						
c	RW	SR28																												Subregion 28 in region 0 (write '1' to clear)						
				NoAccess								0																		No read access occurred in this subregion						
				Access								1																		Read access(es) occurred in this subregion						
d	RW	SR29																												Subregion 29 in region 0 (write '1' to clear)						
				NoAccess								0																		No read access occurred in this subregion						
				Access								1																		Read access(es) occurred in this subregion						
e	RW	SR30																												Subregion 30 in region 0 (write '1' to clear)						
				NoAccess								0																		No read access occurred in this subregion						
				Access								1																		Read access(es) occurred in this subregion						
f	RW	SR31																												Subregion 31 in region 0 (write '1' to clear)						
				NoAccess								0																		No read access occurred in this subregion						
				Access								1																		Read access(es) occurred in this subregion						

45.1.9 PERREGION[1].SUBSTATWA

Address offset: 0x408

Source of event/interrupt in region 1, write access detected while corresponding subregion was enabled for watching

Bit number				31	30	29	28	27	26	25	24	23	22	21	20	19	18	17	16	15	14	13	12	11	10	9	8	7	6	5	4	3	2	1	0
Id				f	e	d	c	b	a	Z	Y	X	W	V	U	T	S	R	Q	P	O	N	M	L	K	J	I	H	G	F	E	D	C	B	A
Reset 0x00000000				**0**	**0**	**0**	**0**	**0**	**0**	**0**	**0**	**0**	**0**	**0**	**0**	**0**	**0**	**0**	**0**	**0**	**0**	**0**	**0**	**0**	**0**	**0**	**0**	**0**	**0**	**0**	**0**	**0**	**0**	**0**	**0**
Id	**RW**	**Field**		**Value Id**								**Value**																		**Description**						
A	RW	SR0																												Subregion 0 in region 1 (write '1' to clear)						
				NoAccess								0																		No write access occurred in this subregion						
				Access								1																		Write access(es) occurred in this subregion						

Bit number				31	30	29	28	27	26	25	24	23	22	21	20	19	18	17	16	15	14	13	12	11	10	9	8	7	6	5	4	3	2	1	0
Id				f	e	d	c	b	a	Z	Y	X	W	V	U	T	S	R	Q	P	O	N	M	L	K	J	I	H	G	F	E	D	C	B	A
Reset 0x00000000				**0**	**0**	**0**	**0**	**0**	**0**	**0**	**0**	**0**	**0**	**0**	**0**	**0**	**0**	**0**	**0**	**0**	**0**	**0**	**0**	**0**	**0**	**0**	**0**	**0**	**0**	**0**	**0**	**0**	**0**	**0**	**0**
Id	**RW**	**Field**	**Value Id**	**Value**								**Description**																							
B	RW	SR1										Subregion 1 in region 1 (write '1' to clear)																							
			NoAccess	0								No write access occurred in this subregion																							
			Access	1								Write access(es) occurred in this subregion																							
C	RW	SR2										Subregion 2 in region 1 (write '1' to clear)																							
			NoAccess	0								No write access occurred in this subregion																							
			Access	1								Write access(es) occurred in this subregion																							
D	RW	SR3										Subregion 3 in region 1 (write '1' to clear)																							
			NoAccess	0								No write access occurred in this subregion																							
			Access	1								Write access(es) occurred in this subregion																							
E	RW	SR4										Subregion 4 in region 1 (write '1' to clear)																							
			NoAccess	0								No write access occurred in this subregion																							
			Access	1								Write access(es) occurred in this subregion																							
F	RW	SR5										Subregion 5 in region 1 (write '1' to clear)																							
			NoAccess	0								No write access occurred in this subregion																							
			Access	1								Write access(es) occurred in this subregion																							
G	RW	SR6										Subregion 6 in region 1 (write '1' to clear)																							
			NoAccess	0								No write access occurred in this subregion																							
			Access	1								Write access(es) occurred in this subregion																							
H	RW	SR7										Subregion 7 in region 1 (write '1' to clear)																							
			NoAccess	0								No write access occurred in this subregion																							
			Access	1								Write access(es) occurred in this subregion																							
I	RW	SR8										Subregion 8 in region 1 (write '1' to clear)																							
			NoAccess	0								No write access occurred in this subregion																							
			Access	1								Write access(es) occurred in this subregion																							
J	RW	SR9										Subregion 9 in region 1 (write '1' to clear)																							
			NoAccess	0								No write access occurred in this subregion																							
			Access	1								Write access(es) occurred in this subregion																							
K	RW	SR10										Subregion 10 in region 1 (write '1' to clear)																							
			NoAccess	0								No write access occurred in this subregion																							
			Access	1								Write access(es) occurred in this subregion																							
L	RW	SR11										Subregion 11 in region 1 (write '1' to clear)																							
			NoAccess	0								No write access occurred in this subregion																							
			Access	1								Write access(es) occurred in this subregion																							
M	RW	SR12										Subregion 12 in region 1 (write '1' to clear)																							
			NoAccess	0								No write access occurred in this subregion																							
			Access	1								Write access(es) occurred in this subregion																							
N	RW	SR13										Subregion 13 in region 1 (write '1' to clear)																							
			NoAccess	0								No write access occurred in this subregion																							
			Access	1								Write access(es) occurred in this subregion																							
O	RW	SR14										Subregion 14 in region 1 (write '1' to clear)																							
			NoAccess	0								No write access occurred in this subregion																							
			Access	1								Write access(es) occurred in this subregion																							
P	RW	SR15										Subregion 15 in region 1 (write '1' to clear)																							
			NoAccess	0								No write access occurred in this subregion																							
			Access	1								Write access(es) occurred in this subregion																							
Q	RW	SR16										Subregion 16 in region 1 (write '1' to clear)																							
			NoAccess	0								No write access occurred in this subregion																							
			Access	1								Write access(es) occurred in this subregion																							
R	RW	SR17										Subregion 17 in region 1 (write '1' to clear)																							
			NoAccess	0								No write access occurred in this subregion																							
			Access	1								Write access(es) occurred in this subregion																							
S	RW	SR18										Subregion 18 in region 1 (write '1' to clear)																							
			NoAccess	0								No write access occurred in this subregion																							
			Access	1								Write access(es) occurred in this subregion																							
T	RW	SR19										Subregion 19 in region 1 (write '1' to clear)																							

Bit number				31	30	29	28	27	26	25	24	23	22	21	20	19	18	17	16	15	14	13	12	11	10	9	8	7	6	5	4	3	2	1	0
Id				f	e	d	c	b	a	Z	Y	X	W	V	U	T	S	R	Q	P	O	N	M	L	K	J	I	H	G	F	E	D	C	B	A
Reset 0x00000000				**0**	**0**	**0**	**0**	**0**	**0**	**0**	**0**	**0**	**0**	**0**	**0**	**0**	**0**	**0**	**0**	**0**	**0**	**0**	**0**	**0**	**0**	**0**	**0**	**0**	**0**	**0**	**0**	**0**	**0**	**0**	**0**
Id	**RW**	**Field**		**Value Id**								**Value**																		**Description**						
				NoAccess								0																		No write access occurred in this subregion						
				Access								1																		Write access(es) occurred in this subregion						
U	RW	SR20																												Subregion 20 in region 1 (write '1' to clear)						
				NoAccess								0																		No write access occurred in this subregion						
				Access								1																		Write access(es) occurred in this subregion						
V	RW	SR21																												Subregion 21 in region 1 (write '1' to clear)						
				NoAccess								0																		No write access occurred in this subregion						
				Access								1																		Write access(es) occurred in this subregion						
W	RW	SR22																												Subregion 22 in region 1 (write '1' to clear)						
				NoAccess								0																		No write access occurred in this subregion						
				Access								1																		Write access(es) occurred in this subregion						
X	RW	SR23																												Subregion 23 in region 1 (write '1' to clear)						
				NoAccess								0																		No write access occurred in this subregion						
				Access								1																		Write access(es) occurred in this subregion						
Y	RW	SR24																												Subregion 24 in region 1 (write '1' to clear)						
				NoAccess								0																		No write access occurred in this subregion						
				Access								1																		Write access(es) occurred in this subregion						
Z	RW	SR25																												Subregion 25 in region 1 (write '1' to clear)						
				NoAccess								0																		No write access occurred in this subregion						
				Access								1																		Write access(es) occurred in this subregion						
a	RW	SR26																												Subregion 26 in region 1 (write '1' to clear)						
				NoAccess								0																		No write access occurred in this subregion						
				Access								1																		Write access(es) occurred in this subregion						
b	RW	SR27																												Subregion 27 in region 1 (write '1' to clear)						
				NoAccess								0																		No write access occurred in this subregion						
				Access								1																		Write access(es) occurred in this subregion						
c	RW	SR28																												Subregion 28 in region 1 (write '1' to clear)						
				NoAccess								0																		No write access occurred in this subregion						
				Access								1																		Write access(es) occurred in this subregion						
d	RW	SR29																												Subregion 29 in region 1 (write '1' to clear)						
				NoAccess								0																		No write access occurred in this subregion						
				Access								1																		Write access(es) occurred in this subregion						
e	RW	SR30																												Subregion 30 in region 1 (write '1' to clear)						
				NoAccess								0																		No write access occurred in this subregion						
				Access								1																		Write access(es) occurred in this subregion						
f	RW	SR31																												Subregion 31 in region 1 (write '1' to clear)						
				NoAccess								0																		No write access occurred in this subregion						
				Access								1																		Write access(es) occurred in this subregion						

45.1.10 PERREGION[1].SUBSTATRA

Address offset: 0x40C

Source of event/interrupt in region 1, read access detected while corresponding subregion was enabled for watching

Bit number				31	30	29	28	27	26	25	24	23	22	21	20	19	18	17	16	15	14	13	12	11	10	9	8	7	6	5	4	3	2	1	0
Id				f	e	d	c	b	a	Z	Y	X	W	V	U	T	S	R	Q	P	O	N	M	L	K	J	I	H	G	F	E	D	C	B	A
Reset 0x00000000				**0**	**0**	**0**	**0**	**0**	**0**	**0**	**0**	**0**	**0**	**0**	**0**	**0**	**0**	**0**	**0**	**0**	**0**	**0**	**0**	**0**	**0**	**0**	**0**	**0**	**0**	**0**	**0**	**0**	**0**	**0**	**0**
Id	**RW**	**Field**		**Value Id**								**Value**																		**Description**						
A	RW	SR0																												Subregion 0 in region 1 (write '1' to clear)						
				NoAccess								0																		No read access occurred in this subregion						
				Access								1																		Read access(es) occurred in this subregion						
B	RW	SR1																												Subregion 1 in region 1 (write '1' to clear)						
				NoAccess								0																		No read access occurred in this subregion						
				Access								1																		Read access(es) occurred in this subregion						

Bit number				31	30	29	28	27	26	25	24	23	22	21	20	19	18	17	16	15	14	13	12	11	10	9	8	7	6	5	4	3	2	1	0
Id				f	e	d	c	b	a	Z	Y	X	W	V	U	T	S	R	Q	P	O	N	M	L	K	J	I	H	G	F	E	D	C	B	A
Reset 0x00000000				**0**	**0**	**0**	**0**	**0**	**0**	**0**	**0**	**0**	**0**	**0**	**0**	**0**	**0**	**0**	**0**	**0**	**0**	**0**	**0**	**0**	**0**	**0**	**0**	**0**	**0**	**0**	**0**	**0**	**0**	**0**	**0**
Id	**RW**	**Field**	**Value Id**	**Value**																															**Description**
C	RW	SR2																																	Subregion 2 in region 1 (write '1' to clear)
			NoAccess	0																															No read access occurred in this subregion
			Access	1																															Read access(es) occurred in this subregion
D	RW	SR3																																	Subregion 3 in region 1 (write '1' to clear)
			NoAccess	0																															No read access occurred in this subregion
			Access	1																															Read access(es) occurred in this subregion
E	RW	SR4																																	Subregion 4 in region 1 (write '1' to clear)
			NoAccess	0																															No read access occurred in this subregion
			Access	1																															Read access(es) occurred in this subregion
F	RW	SR5																																	Subregion 5 in region 1 (write '1' to clear)
			NoAccess	0																															No read access occurred in this subregion
			Access	1																															Read access(es) occurred in this subregion
G	RW	SR6																																	Subregion 6 in region 1 (write '1' to clear)
			NoAccess	0																															No read access occurred in this subregion
			Access	1																															Read access(es) occurred in this subregion
H	RW	SR7																																	Subregion 7 in region 1 (write '1' to clear)
			NoAccess	0																															No read access occurred in this subregion
			Access	1																															Read access(es) occurred in this subregion
I	RW	SR8																																	Subregion 8 in region 1 (write '1' to clear)
			NoAccess	0																															No read access occurred in this subregion
			Access	1																															Read access(es) occurred in this subregion
J	RW	SR9																																	Subregion 9 in region 1 (write '1' to clear)
			NoAccess	0																															No read access occurred in this subregion
			Access	1																															Read access(es) occurred in this subregion
K	RW	SR10																																	Subregion 10 in region 1 (write '1' to clear)
			NoAccess	0																															No read access occurred in this subregion
			Access	1																															Read access(es) occurred in this subregion
L	RW	SR11																																	Subregion 11 in region 1 (write '1' to clear)
			NoAccess	0																															No read access occurred in this subregion
			Access	1																															Read access(es) occurred in this subregion
M	RW	SR12																																	Subregion 12 in region 1 (write '1' to clear)
			NoAccess	0																															No read access occurred in this subregion
			Access	1																															Read access(es) occurred in this subregion
N	RW	SR13																																	Subregion 13 in region 1 (write '1' to clear)
			NoAccess	0																															No read access occurred in this subregion
			Access	1																															Read access(es) occurred in this subregion
O	RW	SR14																																	Subregion 14 in region 1 (write '1' to clear)
			NoAccess	0																															No read access occurred in this subregion
			Access	1																															Read access(es) occurred in this subregion
P	RW	SR15																																	Subregion 15 in region 1 (write '1' to clear)
			NoAccess	0																															No read access occurred in this subregion
			Access	1																															Read access(es) occurred in this subregion
Q	RW	SR16																																	Subregion 16 in region 1 (write '1' to clear)
			NoAccess	0																															No read access occurred in this subregion
			Access	1																															Read access(es) occurred in this subregion
R	RW	SR17																																	Subregion 17 in region 1 (write '1' to clear)
			NoAccess	0																															No read access occurred in this subregion
			Access	1																															Read access(es) occurred in this subregion
S	RW	SR18																																	Subregion 18 in region 1 (write '1' to clear)
			NoAccess	0																															No read access occurred in this subregion
			Access	1																															Read access(es) occurred in this subregion
T	RW	SR19																																	Subregion 19 in region 1 (write '1' to clear)
			NoAccess	0																															No read access occurred in this subregion
			Access	1																															Read access(es) occurred in this subregion
U	RW	SR20																																	Subregion 20 in region 1 (write '1' to clear)

Bit number				31	30	29	28	27	26	25	24	23	22	21	20	19	18	17	16	15	14	13	12	11	10	9	8	7	6	5	4	3	2	1	0
Id				f	e	d	c	b	a	Z	Y	X	W	V	U	T	S	R	Q	P	O	N	M	L	K	J	I	H	G	F	E	D	C	B	A
Reset 0x00000000				**0**	**0**	**0**	**0**	**0**	**0**	**0**	**0**	**0**	**0**	**0**	**0**	**0**	**0**	**0**	**0**	**0**	**0**	**0**	**0**	**0**	**0**	**0**	**0**	**0**	**0**	**0**	**0**	**0**	**0**	**0**	**0**
Id	**RW**	**Field**	**Value Id**	**Value**																															**Description**
			NoAccess	0																															No read access occurred in this subregion
			Access	1																															Read access(es) occurred in this subregion
V	RW	SR21																																	Subregion 21 in region 1 (write '1' to clear)
			NoAccess	0																															No read access occurred in this subregion
			Access	1																															Read access(es) occurred in this subregion
W	RW	SR22																																	Subregion 22 in region 1 (write '1' to clear)
			NoAccess	0																															No read access occurred in this subregion
			Access	1																															Read access(es) occurred in this subregion
X	RW	SR23																																	Subregion 23 in region 1 (write '1' to clear)
			NoAccess	0																															No read access occurred in this subregion
			Access	1																															Read access(es) occurred in this subregion
Y	RW	SR24																																	Subregion 24 in region 1 (write '1' to clear)
			NoAccess	0																															No read access occurred in this subregion
			Access	1																															Read access(es) occurred in this subregion
Z	RW	SR25																																	Subregion 25 in region 1 (write '1' to clear)
			NoAccess	0																															No read access occurred in this subregion
			Access	1																															Read access(es) occurred in this subregion
a	RW	SR26																																	Subregion 26 in region 1 (write '1' to clear)
			NoAccess	0																															No read access occurred in this subregion
			Access	1																															Read access(es) occurred in this subregion
b	RW	SR27																																	Subregion 27 in region 1 (write '1' to clear)
			NoAccess	0																															No read access occurred in this subregion
			Access	1																															Read access(es) occurred in this subregion
c	RW	SR28																																	Subregion 28 in region 1 (write '1' to clear)
			NoAccess	0																															No read access occurred in this subregion
			Access	1																															Read access(es) occurred in this subregion
d	RW	SR29																																	Subregion 29 in region 1 (write '1' to clear)
			NoAccess	0																															No read access occurred in this subregion
			Access	1																															Read access(es) occurred in this subregion
e	RW	SR30																																	Subregion 30 in region 1 (write '1' to clear)
			NoAccess	0																															No read access occurred in this subregion
			Access	1																															Read access(es) occurred in this subregion
f	RW	SR31																																	Subregion 31 in region 1 (write '1' to clear)
			NoAccess	0																															No read access occurred in this subregion
			Access	1																															Read access(es) occurred in this subregion

45.1.11 REGIONEN

Address offset: 0x510

Enable/disable regions watch

Bit number				31	30	29	28	27	26	25	24	23	22	21	20	19	18	17	16	15	14	13	12	11	10	9	8	7	6	5	4	3	2	1	0
Id								L	K	J	I																	H	G	F	E	D	C	B	A
Reset 0x00000000				**0**	**0**	**0**	**0**	**0**	**0**	**0**	**0**	**0**	**0**	**0**	**0**	**0**	**0**	**0**	**0**	**0**	**0**	**0**	**0**	**0**	**0**	**0**	**0**	**0**	**0**	**0**	**0**	**0**	**0**	**0**	**0**
Id	**RW**	**Field**	**Value Id**	**Value**																															**Description**
A	RW	RGN0WA																																	Enable/disable write access watch in region[0]
			Disable	0																															Disable write access watch in this region
			Enable	1																															Enable write access watch in this region
B	RW	RGN0RA																																	Enable/disable read access watch in region[0]
			Disable	0																															Disable read access watch in this region
			Enable	1																															Enable read access watch in this region
C	RW	RGN1WA																																	Enable/disable write access watch in region[1]
			Disable	0																															Disable write access watch in this region
			Enable	1																															Enable write access watch in this region
D	RW	RGN1RA																																	Enable/disable read access watch in region[1]

Bit number				31	30	29	28	27	26	25	24	23	22	21	20	19	18	17	16	15	14	13	12	11	10	9	8	7	6	5	4	3	2	1	0
Id								L	K	J	I																	H	G	F	E	D	C	B	A
Reset 0x00000000				**0**	**0**	**0**	**0**	**0**	**0**	**0**	**0**	**0**	**0**	**0**	**0**	**0**	**0**	**0**	**0**	**0**	**0**	**0**	**0**	**0**	**0**	**0**	**0**	**0**	**0**	**0**	**0**	**0**	**0**	**0**	**0**
Id	**RW**	**Field**	**Value Id**	**Value**								**Description**																							
			Disable	0								Disable read access watch in this region																							
			Enable	1								Enable read access watch in this region																							
E	RW	RGN2WA										Enable/disable write access watch in region[2]																							
			Disable	0								Disable write access watch in this region																							
			Enable	1								Enable write access watch in this region																							
F	RW	RGN2RA										Enable/disable read access watch in region[2]																							
			Disable	0								Disable read access watch in this region																							
			Enable	1								Enable read access watch in this region																							
G	RW	RGN3WA										Enable/disable write access watch in region[3]																							
			Disable	0								Disable write access watch in this region																							
			Enable	1								Enable write access watch in this region																							
H	RW	RGN3RA										Enable/disable read access watch in region[3]																							
			Disable	0								Disable read access watch in this region																							
			Enable	1								Enable read access watch in this region																							
I	RW	PRGN0WA										Enable/disable write access watch in PREGION[0]																							
			Disable	0								Disable write access watch in this PREGION																							
			Enable	1								Enable write access watch in this PREGION																							
J	RW	PRGN0RA										Enable/disable read access watch in PREGION[0]																							
			Disable	0								Disable read access watch in this PREGION																							
			Enable	1								Enable read access watch in this PREGION																							
K	RW	PRGN1WA										Enable/disable write access watch in PREGION[1]																							
			Disable	0								Disable write access watch in this PREGION																							
			Enable	1								Enable write access watch in this PREGION																							
L	RW	PRGN1RA										Enable/disable read access watch in PREGION[1]																							
			Disable	0								Disable read access watch in this PREGION																							
			Enable	1								Enable read access watch in this PREGION																							

45.1.12 REGIONENSET

Address offset: 0x514

Enable regions watch

Bit number				31	30	29	28	27	26	25	24	23	22	21	20	19	18	17	16	15	14	13	12	11	10	9	8	7	6	5	4	3	2	1	0
Id								L	K	J	I																	H	G	F	E	D	C	B	A
Reset 0x00000000				**0**	**0**	**0**	**0**	**0**	**0**	**0**	**0**	**0**	**0**	**0**	**0**	**0**	**0**	**0**	**0**	**0**	**0**	**0**	**0**	**0**	**0**	**0**	**0**	**0**	**0**	**0**	**0**	**0**	**0**	**0**	**0**
Id	**RW**	**Field**	**Value Id**	**Value**								**Description**																							
A	RW	RGN0WA										Enable write access watch in region[0]																							
			Set	1								Enable write access watch in this region																							
			Disabled	0								Write access watch in this region is disabled																							
			Enabled	1								Write access watch in this region is enabled																							
B	RW	RGN0RA										Enable read access watch in region[0]																							
			Set	1								Enable read access watch in this region																							
			Disabled	0								Read access watch in this region is disabled																							
			Enabled	1								Read access watch in this region is enabled																							
C	RW	RGN1WA										Enable write access watch in region[1]																							
			Set	1								Enable write access watch in this region																							
			Disabled	0								Write access watch in this region is disabled																							
			Enabled	1								Write access watch in this region is enabled																							
D	RW	RGN1RA										Enable read access watch in region[1]																							
			Set	1								Enable read access watch in this region																							
			Disabled	0								Read access watch in this region is disabled																							
			Enabled	1								Read access watch in this region is enabled																							
E	RW	RGN2WA										Enable write access watch in region[2]																							
			Set	1								Enable write access watch in this region																							
			Disabled	0								Write access watch in this region is disabled																							

Bit number				31	30	29	28	27	26	25	24	23	22	21	20	19	18	17	16	15	14	13	12	11	10	9	8	7	6	5	4	3	2	1	0
Id								L	K	J	I																	H	G	F	E	D	C	B	A
Reset 0x00000000				**0**	**0**	**0**	**0**	**0**	**0**	**0**	**0**	**0**	**0**	**0**	**0**	**0**	**0**	**0**	**0**	**0**	**0**	**0**	**0**	**0**	**0**	**0**	**0**	**0**	**0**	**0**	**0**	**0**	**0**	**0**	**0**
Id	**RW**	**Field**	**Value Id**	**Value**								**Description**																							
			Enabled	1								Write access watch in this region is enabled																							
F	RW	RGN2RA										Enable read access watch in region[2]																							
			Set	1								Enable read access watch in this region																							
			Disabled	0								Read access watch in this region is disabled																							
			Enabled	1								Read access watch in this region is enabled																							
G	RW	RGN3WA										Enable write access watch in region[3]																							
			Set	1								Enable write access watch in this region																							
			Disabled	0								Write access watch in this region is disabled																							
			Enabled	1								Write access watch in this region is enabled																							
H	RW	RGN3RA										Enable read access watch in region[3]																							
			Set	1								Enable read access watch in this region																							
			Disabled	0								Read access watch in this region is disabled																							
			Enabled	1								Read access watch in this region is enabled																							
I	RW	PRGN0WA										Enable write access watch in PREGION[0]																							
			Set	1								Enable write access watch in this PREGION																							
			Disabled	0								Write access watch in this PREGION is disabled																							
			Enabled	1								Write access watch in this PREGION is enabled																							
J	RW	PRGN0RA										Enable read access watch in PREGION[0]																							
			Set	1								Enable read access watch in this PREGION																							
			Disabled	0								Read access watch in this PREGION is disabled																							
			Enabled	1								Read access watch in this PREGION is enabled																							
K	RW	PRGN1WA										Enable write access watch in PREGION[1]																							
			Set	1								Enable write access watch in this PREGION																							
			Disabled	0								Write access watch in this PREGION is disabled																							
			Enabled	1								Write access watch in this PREGION is enabled																							
L	RW	PRGN1RA										Enable read access watch in PREGION[1]																							
			Set	1								Enable read access watch in this PREGION																							
			Disabled	0								Read access watch in this PREGION is disabled																							
			Enabled	1								Read access watch in this PREGION is enabled																							

45.1.13 REGIONENCLR

Address offset: 0x518

Disable regions watch

Bit number				31	30	29	28	27	26	25	24	23	22	21	20	19	18	17	16	15	14	13	12	11	10	9	8	7	6	5	4	3	2	1	0
Id								L	K	J	I																	H	G	F	E	D	C	B	A
Reset 0x00000000				**0**	**0**	**0**	**0**	**0**	**0**	**0**	**0**	**0**	**0**	**0**	**0**	**0**	**0**	**0**	**0**	**0**	**0**	**0**	**0**	**0**	**0**	**0**	**0**	**0**	**0**	**0**	**0**	**0**	**0**	**0**	**0**
Id	**RW**	**Field**	**Value Id**	**Value**								**Description**																							
A	RW	RGN0WA										Disable write access watch in region[0]																							
			Clear	1								Disable write access watch in this region																							
			Disabled	0								Write access watch in this region is disabled																							
			Enabled	1								Write access watch in this region is enabled																							
B	RW	RGN0RA										Disable read access watch in region[0]																							
			Clear	1								Disable read access watch in this region																							
			Disabled	0								Read access watch in this region is disabled																							
			Enabled	1								Read access watch in this region is enabled																							
C	RW	RGN1WA										Disable write access watch in region[1]																							
			Clear	1								Disable write access watch in this region																							
			Disabled	0								Write access watch in this region is disabled																							
			Enabled	1								Write access watch in this region is enabled																							
D	RW	RGN1RA										Disable read access watch in region[1]																							
			Clear	1								Disable read access watch in this region																							
			Disabled	0								Read access watch in this region is disabled																							
			Enabled	1								Read access watch in this region is enabled																							

Bit number				31	30	29	28	27	26	25	24	23	22	21	20	19	18	17	16	15	14	13	12	11	10	9	8	7	6	5	4	3	2	1	0
Id								L	K	J	I																	H	G	F	E	D	C	B	A
Reset 0x00000000				**0**	**0**	**0**	**0**	**0**	**0**	**0**	**0**	**0**	**0**	**0**	**0**	**0**	**0**	**0**	**0**	**0**	**0**	**0**	**0**	**0**	**0**	**0**	**0**	**0**	**0**	**0**	**0**	**0**	**0**	**0**	**0**
Id	**RW**	**Field**	**Value Id**	**Value**								**Description**																							
E	RW	RGN2WA										Disable write access watch in region[2]																							
			Clear	1								Disable write access watch in this region																							
			Disabled	0								Write access watch in this region is disabled																							
			Enabled	1								Write access watch in this region is enabled																							
F	RW	RGN2RA										Disable read access watch in region[2]																							
			Clear	1								Disable read access watch in this region																							
			Disabled	0								Read access watch in this region is disabled																							
			Enabled	1								Read access watch in this region is enabled																							
G	RW	RGN3WA										Disable write access watch in region[3]																							
			Clear	1								Disable write access watch in this region																							
			Disabled	0								Write access watch in this region is disabled																							
			Enabled	1								Write access watch in this region is enabled																							
H	RW	RGN3RA										Disable read access watch in region[3]																							
			Clear	1								Disable read access watch in this region																							
			Disabled	0								Read access watch in this region is disabled																							
			Enabled	1								Read access watch in this region is enabled																							
I	RW	PRGN0WA										Disable write access watch in PREGION[0]																							
			Clear	1								Disable write access watch in this PREGION																							
			Disabled	0								Write access watch in this PREGION is disabled																							
			Enabled	1								Write access watch in this PREGION is enabled																							
J	RW	PRGN0RA										Disable read access watch in PREGION[0]																							
			Clear	1								Disable read access watch in this PREGION																							
			Disabled	0								Read access watch in this PREGION is disabled																							
			Enabled	1								Read access watch in this PREGION is enabled																							
K	RW	PRGN1WA										Disable write access watch in PREGION[1]																							
			Clear	1								Disable write access watch in this PREGION																							
			Disabled	0								Write access watch in this PREGION is disabled																							
			Enabled	1								Write access watch in this PREGION is enabled																							
L	RW	PRGN1RA										Disable read access watch in PREGION[1]																							
			Clear	1								Disable read access watch in this PREGION																							
			Disabled	0								Read access watch in this PREGION is disabled																							
			Enabled	1								Read access watch in this PREGION is enabled																							

45.1.14 REGION[0].START

Address offset: 0x600

Start address for region 0

Bit number				31	30	29	28	27	26	25	24	23	22	21	20	19	18	17	16	15	14	13	12	11	10	9	8	7	6	5	4	3	2	1	0
Id				A	A	A	A	A	A	A	A	A	A	A	A	A	A	A	A	A	A	A	A	A	A	A	A	A	A	A	A	A	A	A	A
Reset 0x00000000				**0**	**0**	**0**	**0**	**0**	**0**	**0**	**0**	**0**	**0**	**0**	**0**	**0**	**0**	**0**	**0**	**0**	**0**	**0**	**0**	**0**	**0**	**0**	**0**	**0**	**0**	**0**	**0**	**0**	**0**	**0**	**0**
Id	**RW**	**Field**	**Value Id**	**Value**								**Description**																							
A	RW	START										Start address for region																							

45.1.15 REGION[0].END

Address offset: 0x604

End address of region 0

Bit number				31	30	29	28	27	26	25	24	23	22	21	20	19	18	17	16	15	14	13	12	11	10	9	8	7	6	5	4	3	2	1	0
Id				A	A	A	A	A	A	A	A	A	A	A	A	A	A	A	A	A	A	A	A	A	A	A	A	A	A	A	A	A	A	A	A
Reset 0x00000000				**0**	**0**	**0**	**0**	**0**	**0**	**0**	**0**	**0**	**0**	**0**	**0**	**0**	**0**	**0**	**0**	**0**	**0**	**0**	**0**	**0**	**0**	**0**	**0**	**0**	**0**	**0**	**0**	**0**	**0**	**0**	**0**
Id	**RW**	**Field**	**Value Id**	**Value**								**Description**																							
A	RW	END										End address of region.																							

45.1.16 REGION[1].START

Address offset: 0x610

Start address for region 1

Bit number	31	30	29	28	27	26	25	24	23	22	21	20	19	18	17	16	15	14	13	12	11	10	9	8	7	6	5	4	3	2	1	0
Id	A	A	A	A	A	A	A	A	A	A	A	A	A	A	A	A	A	A	A	A	A	A	A	A	A	A	A	A	A	A	A	A
Reset 0x00000000	**0**	**0**	**0**	**0**	**0**	**0**	**0**	**0**	**0**	**0**	**0**	**0**	**0**	**0**	**0**	**0**	**0**	**0**	**0**	**0**	**0**	**0**	**0**	**0**	**0**	**0**	**0**	**0**	**0**	**0**	**0**	**0**

Id	RW	Field	Value Id	Value	Description
A	RW	START			Start address for region

45.1.17 REGION[1].END

Address offset: 0x614

End address of region 1

Bit number	31	30	29	28	27	26	25	24	23	22	21	20	19	18	17	16	15	14	13	12	11	10	9	8	7	6	5	4	3	2	1	0
Id	A	A	A	A	A	A	A	A	A	A	A	A	A	A	A	A	A	A	A	A	A	A	A	A	A	A	A	A	A	A	A	A
Reset 0x00000000	**0**	**0**	**0**	**0**	**0**	**0**	**0**	**0**	**0**	**0**	**0**	**0**	**0**	**0**	**0**	**0**	**0**	**0**	**0**	**0**	**0**	**0**	**0**	**0**	**0**	**0**	**0**	**0**	**0**	**0**	**0**	**0**

Id	RW	Field	Value Id	Value	Description
A	RW	END			End address of region.

45.1.18 REGION[2].START

Address offset: 0x620

Start address for region 2

Bit number	31	30	29	28	27	26	25	24	23	22	21	20	19	18	17	16	15	14	13	12	11	10	9	8	7	6	5	4	3	2	1	0
Id	A	A	A	A	A	A	A	A	A	A	A	A	A	A	A	A	A	A	A	A	A	A	A	A	A	A	A	A	A	A	A	A
Reset 0x00000000	**0**	**0**	**0**	**0**	**0**	**0**	**0**	**0**	**0**	**0**	**0**	**0**	**0**	**0**	**0**	**0**	**0**	**0**	**0**	**0**	**0**	**0**	**0**	**0**	**0**	**0**	**0**	**0**	**0**	**0**	**0**	**0**

Id	RW	Field	Value Id	Value	Description
A	RW	START			Start address for region

45.1.19 REGION[2].END

Address offset: 0x624

End address of region 2

Bit number	31	30	29	28	27	26	25	24	23	22	21	20	19	18	17	16	15	14	13	12	11	10	9	8	7	6	5	4	3	2	1	0
Id	A	A	A	A	A	A	A	A	A	A	A	A	A	A	A	A	A	A	A	A	A	A	A	A	A	A	A	A	A	A	A	A
Reset 0x00000000	**0**	**0**	**0**	**0**	**0**	**0**	**0**	**0**	**0**	**0**	**0**	**0**	**0**	**0**	**0**	**0**	**0**	**0**	**0**	**0**	**0**	**0**	**0**	**0**	**0**	**0**	**0**	**0**	**0**	**0**	**0**	**0**

Id	RW	Field	Value Id	Value	Description
A	RW	END			End address of region.

45.1.20 REGION[3].START

Address offset: 0x630

Start address for region 3

Bit number	31	30	29	28	27	26	25	24	23	22	21	20	19	18	17	16	15	14	13	12	11	10	9	8	7	6	5	4	3	2	1	0
Id	A	A	A	A	A	A	A	A	A	A	A	A	A	A	A	A	A	A	A	A	A	A	A	A	A	A	A	A	A	A	A	A
Reset 0x00000000	**0**	**0**	**0**	**0**	**0**	**0**	**0**	**0**	**0**	**0**	**0**	**0**	**0**	**0**	**0**	**0**	**0**	**0**	**0**	**0**	**0**	**0**	**0**	**0**	**0**	**0**	**0**	**0**	**0**	**0**	**0**	**0**

Id	RW	Field	Value Id	Value	Description
A	RW	START			Start address for region

45.1.21 REGION[3].END

Address offset: 0x634

End address of region 3

Bit number	31	30	29	28	27	26	25	24	23	22	21	20	19	18	17	16	15	14	13	12	11	10	9	8	7	6	5	4	3	2	1	0
Id	A	A	A	A	A	A	A	A	A	A	A	A	A	A	A	A	A	A	A	A	A	A	A	A	A	A	A	A	A	A	A	A
Reset 0x00000000	**0**	**0**	**0**	**0**	**0**	**0**	**0**	**0**	**0**	**0**	**0**	**0**	**0**	**0**	**0**	**0**	**0**	**0**	**0**	**0**	**0**	**0**	**0**	**0**	**0**	**0**	**0**	**0**	**0**	**0**	**0**	**0**

Id	RW	Field	Value Id	Value	Description
A	RW	END			End address of region.

45.1.22 PREGION[0].START

Address offset: 0x6C0

Reserved for future use

Bit number	31	30	29	28	27	26	25	24	23	22	21	20	19	18	17	16	15	14	13	12	11	10	9	8	7	6	5	4	3	2	1	0
Id	A	A	A	A	A	A	A	A	A	A	A	A	A	A	A	A	A	A	A	A	A	A	A	A	A	A	A	A	A	A	A	A
Reset 0x00000000	**0**	**0**	**0**	**0**	**0**	**0**	**0**	**0**	**0**	**0**	**0**	**0**	**0**	**0**	**0**	**0**	**0**	**0**	**0**	**0**	**0**	**0**	**0**	**0**	**0**	**0**	**0**	**0**	**0**	**0**	**0**	**0**

Id	RW	Field	Value Id	Value	Description
A	R	START			Reserved for future use

45.1.23 PREGION[0].END

Address offset: 0x6C4

Reserved for future use

Bit number	31	30	29	28	27	26	25	24	23	22	21	20	19	18	17	16	15	14	13	12	11	10	9	8	7	6	5	4	3	2	1	0
Id	A	A	A	A	A	A	A	A	A	A	A	A	A	A	A	A	A	A	A	A	A	A	A	A	A	A	A	A	A	A	A	A
Reset 0x00000000	**0**	**0**	**0**	**0**	**0**	**0**	**0**	**0**	**0**	**0**	**0**	**0**	**0**	**0**	**0**	**0**	**0**	**0**	**0**	**0**	**0**	**0**	**0**	**0**	**0**	**0**	**0**	**0**	**0**	**0**	**0**	**0**

Id	RW	Field	Value Id	Value	Description
A	R	END			Reserved for future use

45.1.24 PREGION[0].SUBS

Address offset: 0x6C8

Subregions of region 0

Bit number	31	30	29	28	27	26	25	24	23	22	21	20	19	18	17	16	15	14	13	12	11	10	9	8	7	6	5	4	3	2	1	0
Id	f	e	d	c	b	a	Z	Y	X	W	V	U	T	S	R	Q	P	O	N	M	L	K	J	I	H	G	F	E	D	C	B	A
Reset 0x00000000	**0**	**0**	**0**	**0**	**0**	**0**	**0**	**0**	**0**	**0**	**0**	**0**	**0**	**0**	**0**	**0**	**0**	**0**	**0**	**0**	**0**	**0**	**0**	**0**	**0**	**0**	**0**	**0**	**0**	**0**	**0**	**0**

Id	RW	Field	Value Id	Value	Description
A	RW	SR0			Include or exclude subregion 0 in region
			Exclude	0	Exclude
			Include	1	Include
B	RW	SR1			Include or exclude subregion 1 in region
			Exclude	0	Exclude
			Include	1	Include
C	RW	SR2			Include or exclude subregion 2 in region
			Exclude	0	Exclude
			Include	1	Include
D	RW	SR3			Include or exclude subregion 3 in region
			Exclude	0	Exclude
			Include	1	Include
E	RW	SR4			Include or exclude subregion 4 in region
			Exclude	0	Exclude
			Include	1	Include
F	RW	SR5			Include or exclude subregion 5 in region
			Exclude	0	Exclude
			Include	1	Include
G	RW	SR6			Include or exclude subregion 6 in region
			Exclude	0	Exclude
			Include	1	Include

Bit number				31	30	29	28	27	26	25	24	23	22	21	20	19	18	17	16	15	14	13	12	11	10	9	8	7	6	5	4	3	2	1	0
Id				f	e	d	c	b	a	Z	Y	X	W	V	U	T	S	R	Q	P	O	N	M	L	K	J	I	H	G	F	E	D	C	B	A
Reset 0x00000000				**0**	**0**	**0**	**0**	**0**	**0**	**0**	**0**	**0**	**0**	**0**	**0**	**0**	**0**	**0**	**0**	**0**	**0**	**0**	**0**	**0**	**0**	**0**	**0**	**0**	**0**	**0**	**0**	**0**	**0**	**0**	**0**
Id	**RW**	**Field**	**Value Id**	**Value**								**Description**																							
H	RW	SR7										Include or exclude subregion 7 in region																							
			Exclude	0								Exclude																							
			Include	1								Include																							
I	RW	SR8										Include or exclude subregion 8 in region																							
			Exclude	0								Exclude																							
			Include	1								Include																							
J	RW	SR9										Include or exclude subregion 9 in region																							
			Exclude	0								Exclude																							
			Include	1								Include																							
K	RW	SR10										Include or exclude subregion 10 in region																							
			Exclude	0								Exclude																							
			Include	1								Include																							
L	RW	SR11										Include or exclude subregion 11 in region																							
			Exclude	0								Exclude																							
			Include	1								Include																							
M	RW	SR12										Include or exclude subregion 12 in region																							
			Exclude	0								Exclude																							
			Include	1								Include																							
N	RW	SR13										Include or exclude subregion 13 in region																							
			Exclude	0								Exclude																							
			Include	1								Include																							
O	RW	SR14										Include or exclude subregion 14 in region																							
			Exclude	0								Exclude																							
			Include	1								Include																							
P	RW	SR15										Include or exclude subregion 15 in region																							
			Exclude	0								Exclude																							
			Include	1								Include																							
Q	RW	SR16										Include or exclude subregion 16 in region																							
			Exclude	0								Exclude																							
			Include	1								Include																							
R	RW	SR17										Include or exclude subregion 17 in region																							
			Exclude	0								Exclude																							
			Include	1								Include																							
S	RW	SR18										Include or exclude subregion 18 in region																							
			Exclude	0								Exclude																							
			Include	1								Include																							
T	RW	SR19										Include or exclude subregion 19 in region																							
			Exclude	0								Exclude																							
			Include	1								Include																							
U	RW	SR20										Include or exclude subregion 20 in region																							
			Exclude	0								Exclude																							
			Include	1								Include																							
V	RW	SR21										Include or exclude subregion 21 in region																							
			Exclude	0								Exclude																							
			Include	1								Include																							
W	RW	SR22										Include or exclude subregion 22 in region																							
			Exclude	0								Exclude																							
			Include	1								Include																							
X	RW	SR23										Include or exclude subregion 23 in region																							
			Exclude	0								Exclude																							
			Include	1								Include																							
Y	RW	SR24										Include or exclude subregion 24 in region																							
			Exclude	0								Exclude																							
			Include	1								Include																							
Z	RW	SR25										Include or exclude subregion 25 in region																							

Bit number				31	30	29	28	27	26	25	24	23	22	21	20	19	18	17	16	15	14	13	12	11	10	9	8	7	6	5	4	3	2	1	0
Id				f	e	d	c	b	a	Z	Y	X	W	V	U	T	S	R	Q	P	O	N	M	L	K	J	I	H	G	F	E	D	C	B	A
Reset 0x00000000				**0**	**0**	**0**	**0**	**0**	**0**	**0**	**0**	**0**	**0**	**0**	**0**	**0**	**0**	**0**	**0**	**0**	**0**	**0**	**0**	**0**	**0**	**0**	**0**	**0**	**0**	**0**	**0**	**0**	**0**	**0**	**0**
Id	**RW**	**Field**	**Value Id**	**Value**								**Description**																							
			Exclude	0								Exclude																							
			Include	1								Include																							
a	RW	SR26										Include or exclude subregion 26 in region																							
			Exclude	0								Exclude																							
			Include	1								Include																							
b	RW	SR27										Include or exclude subregion 27 in region																							
			Exclude	0								Exclude																							
			Include	1								Include																							
c	RW	SR28										Include or exclude subregion 28 in region																							
			Exclude	0								Exclude																							
			Include	1								Include																							
d	RW	SR29										Include or exclude subregion 29 in region																							
			Exclude	0								Exclude																							
			Include	1								Include																							
e	RW	SR30										Include or exclude subregion 30 in region																							
			Exclude	0								Exclude																							
			Include	1								Include																							
f	RW	SR31										Include or exclude subregion 31 in region																							
			Exclude	0								Exclude																							
			Include	1								Include																							

45.1.25 PREGION[1].START

Address offset: 0x6D0

Reserved for future use

Bit number				31	30	29	28	27	26	25	24	23	22	21	20	19	18	17	16	15	14	13	12	11	10	9	8	7	6	5	4	3	2	1	0
Id				A	A	A	A	A	A	A	A	A	A	A	A	A	A	A	A	A	A	A	A	A	A	A	A	A	A	A	A	A	A	A	A
Reset 0x00000000				**0**	**0**	**0**	**0**	**0**	**0**	**0**	**0**	**0**	**0**	**0**	**0**	**0**	**0**	**0**	**0**	**0**	**0**	**0**	**0**	**0**	**0**	**0**	**0**	**0**	**0**	**0**	**0**	**0**	**0**	**0**	**0**
Id	**RW**	**Field**	**Value Id**	**Value**								**Description**																							
A	R	START										Reserved for future use																							

45.1.26 PREGION[1].END

Address offset: 0x6D4

Reserved for future use

Bit number				31	30	29	28	27	26	25	24	23	22	21	20	19	18	17	16	15	14	13	12	11	10	9	8	7	6	5	4	3	2	1	0
Id				A	A	A	A	A	A	A	A	A	A	A	A	A	A	A	A	A	A	A	A	A	A	A	A	A	A	A	A	A	A	A	A
Reset 0x00000000				**0**	**0**	**0**	**0**	**0**	**0**	**0**	**0**	**0**	**0**	**0**	**0**	**0**	**0**	**0**	**0**	**0**	**0**	**0**	**0**	**0**	**0**	**0**	**0**	**0**	**0**	**0**	**0**	**0**	**0**	**0**	**0**
Id	**RW**	**Field**	**Value Id**	**Value**								**Description**																							
A	R	END										Reserved for future use																							

45.1.27 PREGION[1].SUBS

Address offset: 0x6D8

Subregions of region 1

Bit number				31	30	29	28	27	26	25	24	23	22	21	20	19	18	17	16	15	14	13	12	11	10	9	8	7	6	5	4	3	2	1	0
Id				f	e	d	c	b	a	Z	Y	X	W	V	U	T	S	R	Q	P	O	N	M	L	K	J	I	H	G	F	E	D	C	B	A
Reset 0x00000000				**0**	**0**	**0**	**0**	**0**	**0**	**0**	**0**	**0**	**0**	**0**	**0**	**0**	**0**	**0**	**0**	**0**	**0**	**0**	**0**	**0**	**0**	**0**	**0**	**0**	**0**	**0**	**0**	**0**	**0**	**0**	**0**
Id	**RW**	**Field**	**Value Id**	**Value**								**Description**																							
A	RW	SR0										Include or exclude subregion 0 in region																							
			Exclude	0								Exclude																							

Bit number				31	30	29	28	27	26	25	24	23	22	21	20	19	18	17	16	15	14	13	12	11	10	9	8	7	6	5	4	3	2	1	0
Id				f	e	d	c	b	a	Z	Y	X	W	V	U	T	S	R	Q	P	O	N	M	L	K	J	I	H	G	F	E	D	C	B	A
Reset 0x00000000				**0**	**0**	**0**	**0**	**0**	**0**	**0**	**0**	**0**	**0**	**0**	**0**	**0**	**0**	**0**	**0**	**0**	**0**	**0**	**0**	**0**	**0**	**0**	**0**	**0**	**0**	**0**	**0**	**0**	**0**	**0**	**0**
Id	**RW**	**Field**	**Value Id**	**Value**								**Description**																							
			Include	1								Include																							
B	RW	SR1										Include or exclude subregion 1 in region																							
			Exclude	0								Exclude																							
			Include	1								Include																							
C	RW	SR2										Include or exclude subregion 2 in region																							
			Exclude	0								Exclude																							
			Include	1								Include																							
D	RW	SR3										Include or exclude subregion 3 in region																							
			Exclude	0								Exclude																							
			Include	1								Include																							
E	RW	SR4										Include or exclude subregion 4 in region																							
			Exclude	0								Exclude																							
			Include	1								Include																							
F	RW	SR5										Include or exclude subregion 5 in region																							
			Exclude	0								Exclude																							
			Include	1								Include																							
G	RW	SR6										Include or exclude subregion 6 in region																							
			Exclude	0								Exclude																							
			Include	1								Include																							
H	RW	SR7										Include or exclude subregion 7 in region																							
			Exclude	0								Exclude																							
			Include	1								Include																							
I	RW	SR8										Include or exclude subregion 8 in region																							
			Exclude	0								Exclude																							
			Include	1								Include																							
J	RW	SR9										Include or exclude subregion 9 in region																							
			Exclude	0								Exclude																							
			Include	1								Include																							
K	RW	SR10										Include or exclude subregion 10 in region																							
			Exclude	0								Exclude																							
			Include	1								Include																							
L	RW	SR11										Include or exclude subregion 11 in region																							
			Exclude	0								Exclude																							
			Include	1								Include																							
M	RW	SR12										Include or exclude subregion 12 in region																							
			Exclude	0								Exclude																							
			Include	1								Include																							
N	RW	SR13										Include or exclude subregion 13 in region																							
			Exclude	0								Exclude																							
			Include	1								Include																							
O	RW	SR14										Include or exclude subregion 14 in region																							
			Exclude	0								Exclude																							
			Include	1								Include																							
P	RW	SR15										Include or exclude subregion 15 in region																							
			Exclude	0								Exclude																							
			Include	1								Include																							
Q	RW	SR16										Include or exclude subregion 16 in region																							
			Exclude	0								Exclude																							
			Include	1								Include																							
R	RW	SR17										Include or exclude subregion 17 in region																							
			Exclude	0								Exclude																							
			Include	1								Include																							
S	RW	SR18										Include or exclude subregion 18 in region																							
			Exclude	0								Exclude																							
			Include	1								Include																							

Bit number				31	30	29	28	27	26	25	24	23	22	21	20	19	18	17	16	15	14	13	12	11	10	9	8	7	6	5	4	3	2	1	0
Id				f	e	d	c	b	a	Z	Y	X	W	V	U	T	S	R	Q	P	O	N	M	L	K	J	I	H	G	F	E	D	C	B	A
Reset 0x00000000				**0**	**0**	**0**	**0**	**0**	**0**	**0**	**0**	**0**	**0**	**0**	**0**	**0**	**0**	**0**	**0**	**0**	**0**	**0**	**0**	**0**	**0**	**0**	**0**	**0**	**0**	**0**	**0**	**0**	**0**	**0**	**0**
Id	**RW**	**Field**	**Value Id**	**Value**								**Description**																							
T	RW	SR19										Include or exclude subregion 19 in region																							
			Exclude	0								Exclude																							
			Include	1								Include																							
U	RW	SR20										Include or exclude subregion 20 in region																							
			Exclude	0								Exclude																							
			Include	1								Include																							
V	RW	SR21										Include or exclude subregion 21 in region																							
			Exclude	0								Exclude																							
			Include	1								Include																							
W	RW	SR22										Include or exclude subregion 22 in region																							
			Exclude	0								Exclude																							
			Include	1								Include																							
X	RW	SR23										Include or exclude subregion 23 in region																							
			Exclude	0								Exclude																							
			Include	1								Include																							
Y	RW	SR24										Include or exclude subregion 24 in region																							
			Exclude	0								Exclude																							
			Include	1								Include																							
Z	RW	SR25										Include or exclude subregion 25 in region																							
			Exclude	0								Exclude																							
			Include	1								Include																							
a	RW	SR26										Include or exclude subregion 26 in region																							
			Exclude	0								Exclude																							
			Include	1								Include																							
b	RW	SR27										Include or exclude subregion 27 in region																							
			Exclude	0								Exclude																							
			Include	1								Include																							
c	RW	SR28										Include or exclude subregion 28 in region																							
			Exclude	0								Exclude																							
			Include	1								Include																							
d	RW	SR29										Include or exclude subregion 29 in region																							
			Exclude	0								Exclude																							
			Include	1								Include																							
e	RW	SR30										Include or exclude subregion 30 in region																							
			Exclude	0								Exclude																							
			Include	1								Include																							
f	RW	SR31										Include or exclude subregion 31 in region																							
			Exclude	0								Exclude																							
			Include	1								Include																							

46 EGU — Event generator unit

The Event generator unit (EGU) provides support for inter-layer signaling. This means support for atomic triggering of both CPU execution and hardware tasks from both firmware (by CPU) and hardware (by PPI). This feature can, for instance, be used for triggering CPU execution at a lower priority execution from a higher priority execution, or to handle a peripheral's ISR execution at a lower priority for some of its events. However, triggering any priority from any priority is possible.

Listed here are the main EGU features:

- Enables SW triggering of interrupts
- 6 EGU instances – separate interrupt vectors
- Up to 16 separate event flags per interrupt for multiplexing

The EGU implements a set of tasks which can individually be triggered to generate the corresponding event, i.e., the corresponding event for TASKS_TRIGGER[n] is EVENTS_TRIGGERED[n].

Table 109: EGU configuration

EGU instance	Number of event flags
0-5	16

46.1 Registers

Table 110: Instances

Base address	Peripheral	Instance	Description	Configuration
0x40014000	EGU	EGU0	Event Generator Unit 0	
0x40015000	EGU	EGU1	Event Generator Unit 1	
0x40016000	EGU	EGU2	Event Generator Unit 2	
0x40017000	EGU	EGU3	Event Generator Unit 3	
0x40018000	EGU	EGU4	Event Generator Unit 4	
0x40019000	EGU	EGU5	Event Generator Unit 5	

Table 111: Register Overview

Register	Offset	Description
TASKS_TRIGGER[0]	0x000	Trigger 0 for triggering the corresponding TRIGGERED[0] event
TASKS_TRIGGER[1]	0x004	Trigger 1 for triggering the corresponding TRIGGERED[1] event
TASKS_TRIGGER[2]	0x008	Trigger 2 for triggering the corresponding TRIGGERED[2] event
TASKS_TRIGGER[3]	0x00C	Trigger 3 for triggering the corresponding TRIGGERED[3] event
TASKS_TRIGGER[4]	0x010	Trigger 4 for triggering the corresponding TRIGGERED[4] event
TASKS_TRIGGER[5]	0x014	Trigger 5 for triggering the corresponding TRIGGERED[5] event
TASKS_TRIGGER[6]	0x018	Trigger 6 for triggering the corresponding TRIGGERED[6] event
TASKS_TRIGGER[7]	0x01C	Trigger 7 for triggering the corresponding TRIGGERED[7] event
TASKS_TRIGGER[8]	0x020	Trigger 8 for triggering the corresponding TRIGGERED[8] event
TASKS_TRIGGER[9]	0x024	Trigger 9 for triggering the corresponding TRIGGERED[9] event
TASKS_TRIGGER[10]	0x028	Trigger 10 for triggering the corresponding TRIGGERED[10] event
TASKS_TRIGGER[11]	0x02C	Trigger 11 for triggering the corresponding TRIGGERED[11] event
TASKS_TRIGGER[12]	0x030	Trigger 12 for triggering the corresponding TRIGGERED[12] event
TASKS_TRIGGER[13]	0x034	Trigger 13 for triggering the corresponding TRIGGERED[13] event
TASKS_TRIGGER[14]	0x038	Trigger 14 for triggering the corresponding TRIGGERED[14] event
TASKS_TRIGGER[15]	0x03C	Trigger 15 for triggering the corresponding TRIGGERED[15] event
EVENTS_TRIGGERED[0]	0x100	Event number 0 generated by triggering the corresponding TRIGGER[0] task
EVENTS_TRIGGERED[1]	0x104	Event number 1 generated by triggering the corresponding TRIGGER[1] task
EVENTS_TRIGGERED[2]	0x108	Event number 2 generated by triggering the corresponding TRIGGER[2] task
EVENTS_TRIGGERED[3]	0x10C	Event number 3 generated by triggering the corresponding TRIGGER[3] task
EVENTS_TRIGGERED[4]	0x110	Event number 4 generated by triggering the corresponding TRIGGER[4] task

Register	Offset	Description
EVENTS_TRIGGERED[5]	0x114	Event number 5 generated by triggering the corresponding TRIGGER[5] task
EVENTS_TRIGGERED[6]	0x118	Event number 6 generated by triggering the corresponding TRIGGER[6] task
EVENTS_TRIGGERED[7]	0x11C	Event number 7 generated by triggering the corresponding TRIGGER[7] task
EVENTS_TRIGGERED[8]	0x120	Event number 8 generated by triggering the corresponding TRIGGER[8] task
EVENTS_TRIGGERED[9]	0x124	Event number 9 generated by triggering the corresponding TRIGGER[9] task
EVENTS_TRIGGERED[10]	0x128	Event number 10 generated by triggering the corresponding TRIGGER[10] task
EVENTS_TRIGGERED[11]	0x12C	Event number 11 generated by triggering the corresponding TRIGGER[11] task
EVENTS_TRIGGERED[12]	0x130	Event number 12 generated by triggering the corresponding TRIGGER[12] task
EVENTS_TRIGGERED[13]	0x134	Event number 13 generated by triggering the corresponding TRIGGER[13] task
EVENTS_TRIGGERED[14]	0x138	Event number 14 generated by triggering the corresponding TRIGGER[14] task
EVENTS_TRIGGERED[15]	0x13C	Event number 15 generated by triggering the corresponding TRIGGER[15] task
INTEN	0x300	Enable or disable interrupt
INTENSET	0x304	Enable interrupt
INTENCLR	0x308	Disable interrupt

46.1.1 INTEN

Address offset: 0x300

Enable or disable interrupt

Bit number	31	30	29	28	27	26	25	24	23	22	21	20	19	18	17	16	15	14	13	12	11	10	9	8	7	6	5	4	3	2	1	0
Id																	P	O	N	M	L	K	J	I	H	G	F	E	D	C	B	A
Reset 0x00000000	**0**	**0**	**0**	**0**	**0**	**0**	**0**	**0**	**0**	**0**	**0**	**0**	**0**	**0**	**0**	**0**	**0**	**0**	**0**	**0**	**0**	**0**	**0**	**0**	**0**	**0**	**0**	**0**	**0**	**0**	**0**	**0**

Id	RW	Field	Value Id	Value	Description
A	RW	TRIGGERED0			Enable or disable interrupt for TRIGGERED[0] event See *EVENTS_TRIGGERED[0]*
			Disabled	0	Disable
			Enabled	1	Enable
B	RW	TRIGGERED1			Enable or disable interrupt for TRIGGERED[1] event See *EVENTS_TRIGGERED[1]*
			Disabled	0	Disable
			Enabled	1	Enable
C	RW	TRIGGERED2			Enable or disable interrupt for TRIGGERED[2] event See *EVENTS_TRIGGERED[2]*
			Disabled	0	Disable
			Enabled	1	Enable
D	RW	TRIGGERED3			Enable or disable interrupt for TRIGGERED[3] event See *EVENTS_TRIGGERED[3]*
			Disabled	0	Disable
			Enabled	1	Enable
E	RW	TRIGGERED4			Enable or disable interrupt for TRIGGERED[4] event See *EVENTS_TRIGGERED[4]*
			Disabled	0	Disable
			Enabled	1	Enable
F	RW	TRIGGERED5			Enable or disable interrupt for TRIGGERED[5] event See *EVENTS_TRIGGERED[5]*
			Disabled	0	Disable
			Enabled	1	Enable
G	RW	TRIGGERED6			Enable or disable interrupt for TRIGGERED[6] event See *EVENTS_TRIGGERED[6]*
			Disabled	0	Disable
			Enabled	1	Enable
H	RW	TRIGGERED7			Enable or disable interrupt for TRIGGERED[7] event See *EVENTS_TRIGGERED[7]*
			Disabled	0	Disable

Id	RW	Field	Value Id	Value	Description
			Enabled	1	Enable
I	RW	TRIGGERED8			Enable or disable interrupt for TRIGGERED[8] event See *EVENTS_TRIGGERED[8]*
			Disabled	0	Disable
			Enabled	1	Enable
J	RW	TRIGGERED9			Enable or disable interrupt for TRIGGERED[9] event See *EVENTS_TRIGGERED[9]*
			Disabled	0	Disable
			Enabled	1	Enable
K	RW	TRIGGERED10			Enable or disable interrupt for TRIGGERED[10] event See *EVENTS_TRIGGERED[10]*
			Disabled	0	Disable
			Enabled	1	Enable
L	RW	TRIGGERED11			Enable or disable interrupt for TRIGGERED[11] event See *EVENTS_TRIGGERED[11]*
			Disabled	0	Disable
			Enabled	1	Enable
M	RW	TRIGGERED12			Enable or disable interrupt for TRIGGERED[12] event See *EVENTS_TRIGGERED[12]*
			Disabled	0	Disable
			Enabled	1	Enable
N	RW	TRIGGERED13			Enable or disable interrupt for TRIGGERED[13] event See *EVENTS_TRIGGERED[13]*
			Disabled	0	Disable
			Enabled	1	Enable
O	RW	TRIGGERED14			Enable or disable interrupt for TRIGGERED[14] event See *EVENTS_TRIGGERED[14]*
			Disabled	0	Disable
			Enabled	1	Enable
P	RW	TRIGGERED15			Enable or disable interrupt for TRIGGERED[15] event See *EVENTS_TRIGGERED[15]*
			Disabled	0	Disable
			Enabled	1	Enable

46.1.2 INTENSET

Address offset: 0x304

Enable interrupt

Bit number	31	30	29	28	27	26	25	24	23	22	21	20	19	18	17	16	15	14	13	12	11	10	9	8	7	6	5	4	3	2	1	0
Id																	P	O	N	M	L	K	J	I	H	G	F	E	D	C	B	A
Reset 0x00000000	**0**	**0**	**0**	**0**	**0**	**0**	**0**	**0**	**0**	**0**	**0**	**0**	**0**	**0**	**0**	**0**	**0**	**0**	**0**	**0**	**0**	**0**	**0**	**0**	**0**	**0**	**0**	**0**	**0**	**0**	**0**	**0**

Id	RW	Field	Value Id	Value	Description
A	RW	TRIGGERED0			Write '1' to Enable interrupt for TRIGGERED[0] event See *EVENTS_TRIGGERED[0]*
			Set	1	Enable
			Disabled	0	Read: Disabled
			Enabled	1	Read: Enabled
B	RW	TRIGGERED1			Write '1' to Enable interrupt for TRIGGERED[1] event See *EVENTS_TRIGGERED[1]*
			Set	1	Enable

Bit number				31	30	29	28	27	26	25	24	23	22	21	20	19	18	17	16	15	14	13	12	11	10	9	8	7	6	5	4	3	2	1	0
Id																				P	O	N	M	L	K	J	I	H	G	F	E	D	C	B	A
Reset 0x00000000				**0**	**0**	**0**	**0**	**0**	**0**	**0**	**0**	**0**	**0**	**0**	**0**	**0**	**0**	**0**	**0**	**0**	**0**	**0**	**0**	**0**	**0**	**0**	**0**	**0**	**0**	**0**	**0**	**0**	**0**	**0**	**0**
Id	**RW**	**Field**	**Value Id**	**Value**								**Description**																							
			Disabled	0								Read: Disabled																							
			Enabled	1								Read: Enabled																							
C	RW	TRIGGERED2										Write '1' to Enable interrupt for TRIGGERED[2] event See *EVENTS_TRIGGERED[2]*																							
			Set	1								Enable																							
			Disabled	0								Read: Disabled																							
			Enabled	1								Read: Enabled																							
D	RW	TRIGGERED3										Write '1' to Enable interrupt for TRIGGERED[3] event See *EVENTS_TRIGGERED[3]*																							
			Set	1								Enable																							
			Disabled	0								Read: Disabled																							
			Enabled	1								Read: Enabled																							
E	RW	TRIGGERED4										Write '1' to Enable interrupt for TRIGGERED[4] event See *EVENTS_TRIGGERED[4]*																							
			Set	1								Enable																							
			Disabled	0								Read: Disabled																							
			Enabled	1								Read: Enabled																							
F	RW	TRIGGERED5										Write '1' to Enable interrupt for TRIGGERED[5] event See *EVENTS_TRIGGERED[5]*																							
			Set	1								Enable																							
			Disabled	0								Read: Disabled																							
			Enabled	1								Read: Enabled																							
G	RW	TRIGGERED6										Write '1' to Enable interrupt for TRIGGERED[6] event See *EVENTS_TRIGGERED[6]*																							
			Set	1								Enable																							
			Disabled	0								Read: Disabled																							
			Enabled	1								Read: Enabled																							
H	RW	TRIGGERED7										Write '1' to Enable interrupt for TRIGGERED[7] event See *EVENTS_TRIGGERED[7]*																							
			Set	1								Enable																							
			Disabled	0								Read: Disabled																							
			Enabled	1								Read: Enabled																							
I	RW	TRIGGERED8										Write '1' to Enable interrupt for TRIGGERED[8] event See *EVENTS_TRIGGERED[8]*																							
			Set	1								Enable																							
			Disabled	0								Read: Disabled																							
			Enabled	1								Read: Enabled																							
J	RW	TRIGGERED9										Write '1' to Enable interrupt for TRIGGERED[9] event See *EVENTS_TRIGGERED[9]*																							
			Set	1								Enable																							
			Disabled	0								Read: Disabled																							
			Enabled	1								Read: Enabled																							
K	RW	TRIGGERED10										Write '1' to Enable interrupt for TRIGGERED[10] event See *EVENTS_TRIGGERED[10]*																							
			Set	1								Enable																							
			Disabled	0								Read: Disabled																							
			Enabled	1								Read: Enabled																							
L	RW	TRIGGERED11										Write '1' to Enable interrupt for TRIGGERED[11] event See *EVENTS_TRIGGERED[11]*																							
			Set	1								Enable																							
			Disabled	0								Read: Disabled																							

Bit number				31 30 29 28 27 26 25 24 23 22 21 20 19 18 17 16 15 14 13 12 11 10 9 8 7 6 5 4 3 2 1 0	
Id				P O N M L K J I H G F E D C B A	
Reset 0x00000000				**0 0 0 0 0 0 0 0 0 0 0 0 0 0 0 0 0 0 0 0 0 0 0 0 0 0 0 0 0 0 0 0**	
Id	**RW**	**Field**	**Value Id**	**Value**	**Description**
			Enabled	1	Read: Enabled
M	RW	TRIGGERED12			Write '1' to Enable interrupt for TRIGGERED[12] event See *EVENTS_TRIGGERED[12]*
			Set	1	Enable
			Disabled	0	Read: Disabled
			Enabled	1	Read: Enabled
N	RW	TRIGGERED13			Write '1' to Enable interrupt for TRIGGERED[13] event See *EVENTS_TRIGGERED[13]*
			Set	1	Enable
			Disabled	0	Read: Disabled
			Enabled	1	Read: Enabled
O	RW	TRIGGERED14			Write '1' to Enable interrupt for TRIGGERED[14] event See *EVENTS_TRIGGERED[14]*
			Set	1	Enable
			Disabled	0	Read: Disabled
			Enabled	1	Read: Enabled
P	RW	TRIGGERED15			Write '1' to Enable interrupt for TRIGGERED[15] event See *EVENTS_TRIGGERED[15]*
			Set	1	Enable
			Disabled	0	Read: Disabled
			Enabled	1	Read: Enabled

46.1.3 INTENCLR

Address offset: 0x308

Disable interrupt

Bit number				31 30 29 28 27 26 25 24 23 22 21 20 19 18 17 16 15 14 13 12 11 10 9 8 7 6 5 4 3 2 1 0	
Id				P O N M L K J I H G F E D C B A	
Reset 0x00000000				**0 0 0 0 0 0 0 0 0 0 0 0 0 0 0 0 0 0 0 0 0 0 0 0 0 0 0 0 0 0 0 0**	
Id	**RW**	**Field**	**Value Id**	**Value**	**Description**
A	RW	TRIGGERED0			Write '1' to Disable interrupt for TRIGGERED[0] event See *EVENTS_TRIGGERED[0]*
			Clear	1	Disable
			Disabled	0	Read: Disabled
			Enabled	1	Read: Enabled
B	RW	TRIGGERED1			Write '1' to Disable interrupt for TRIGGERED[1] event See *EVENTS_TRIGGERED[1]*
			Clear	1	Disable
			Disabled	0	Read: Disabled
			Enabled	1	Read: Enabled
C	RW	TRIGGERED2			Write '1' to Disable interrupt for TRIGGERED[2] event See *EVENTS_TRIGGERED[2]*
			Clear	1	Disable
			Disabled	0	Read: Disabled
			Enabled	1	Read: Enabled
D	RW	TRIGGERED3			Write '1' to Disable interrupt for TRIGGERED[3] event See *EVENTS_TRIGGERED[3]*
			Clear	1	Disable
			Disabled	0	Read: Disabled
			Enabled	1	Read: Enabled
E	RW	TRIGGERED4			Write '1' to Disable interrupt for TRIGGERED[4] event

Bit number				31	30	29	28	27	26	25	24	23	22	21	20	19	18	17	16	15	14	13	12	11	10	9	8	7	6	5	4	3	2	1	0
Id																				P	O	N	M	L	K	J	I	H	G	F	E	D	C	B	A
Reset 0x00000000				**0**	**0**	**0**	**0**	**0**	**0**	**0**	**0**	**0**	**0**	**0**	**0**	**0**	**0**	**0**	**0**	**0**	**0**	**0**	**0**	**0**	**0**	**0**	**0**	**0**	**0**	**0**	**0**	**0**	**0**	**0**	**0**
Id	**RW**	**Field**	**Value Id**	**Value**								**Description**																							
												See *EVENTS_TRIGGERED[4]*																							
			Clear	1								Disable																							
			Disabled	0								Read: Disabled																							
			Enabled	1								Read: Enabled																							
F	RW	TRIGGERED5										Write '1' to Disable interrupt for TRIGGERED[5] event See *EVENTS_TRIGGERED[5]*																							
			Clear	1								Disable																							
			Disabled	0								Read: Disabled																							
			Enabled	1								Read: Enabled																							
G	RW	TRIGGERED6										Write '1' to Disable interrupt for TRIGGERED[6] event See *EVENTS_TRIGGERED[6]*																							
			Clear	1								Disable																							
			Disabled	0								Read: Disabled																							
			Enabled	1								Read: Enabled																							
H	RW	TRIGGERED7										Write '1' to Disable interrupt for TRIGGERED[7] event See *EVENTS_TRIGGERED[7]*																							
			Clear	1								Disable																							
			Disabled	0								Read: Disabled																							
			Enabled	1								Read: Enabled																							
I	RW	TRIGGERED8										Write '1' to Disable interrupt for TRIGGERED[8] event See *EVENTS_TRIGGERED[8]*																							
			Clear	1								Disable																							
			Disabled	0								Read: Disabled																							
			Enabled	1								Read: Enabled																							
J	RW	TRIGGERED9										Write '1' to Disable interrupt for TRIGGERED[9] event See *EVENTS_TRIGGERED[9]*																							
			Clear	1								Disable																							
			Disabled	0								Read: Disabled																							
			Enabled	1								Read: Enabled																							
K	RW	TRIGGERED10										Write '1' to Disable interrupt for TRIGGERED[10] event See *EVENTS_TRIGGERED[10]*																							
			Clear	1								Disable																							
			Disabled	0								Read: Disabled																							
			Enabled	1								Read: Enabled																							
L	RW	TRIGGERED11										Write '1' to Disable interrupt for TRIGGERED[11] event See *EVENTS_TRIGGERED[11]*																							
			Clear	1								Disable																							
			Disabled	0								Read: Disabled																							
			Enabled	1								Read: Enabled																							
M	RW	TRIGGERED12										Write '1' to Disable interrupt for TRIGGERED[12] event See *EVENTS_TRIGGERED[12]*																							
			Clear	1								Disable																							
			Disabled	0								Read: Disabled																							
			Enabled	1								Read: Enabled																							
N	RW	TRIGGERED13										Write '1' to Disable interrupt for TRIGGERED[13] event See *EVENTS_TRIGGERED[13]*																							
			Clear	1								Disable																							
			Disabled	0								Read: Disabled																							
			Enabled	1								Read: Enabled																							
O	RW	TRIGGERED14										Write '1' to Disable interrupt for TRIGGERED[14] event See *EVENTS_TRIGGERED[14]*																							

Bit number	31	30	29	28	27	26	25	24	23	22	21	20	19	18	17	16	15	14	13	12	11	10	9	8	7	6	5	4	3	2	1	0
Id																	P	O	N	M	L	K	J	I	H	G	F	E	D	C	B	A
Reset 0x00000000	**0**	**0**	**0**	**0**	**0**	**0**	**0**	**0**	**0**	**0**	**0**	**0**	**0**	**0**	**0**	**0**	**0**	**0**	**0**	**0**	**0**	**0**	**0**	**0**	**0**	**0**	**0**	**0**	**0**	**0**	**0**	**0**

Id	RW	Field	Value Id	Value	Description
			Clear	1	Disable
			Disabled	0	Read: Disabled
			Enabled	1	Read: Enabled
P	RW	TRIGGERED15			Write '1' to Disable interrupt for TRIGGERED[15] event See *EVENTS_TRIGGERED[15]*
			Clear	1	Disable
			Disabled	0	Read: Disabled
			Enabled	1	Read: Enabled

46.2 Electrical Specification

46.2.1 EGU Electrical Specification

Symbol	Description	Min.	Typ.	Max.	Units
$t_{EGU,EVT}$	Latency between setting an EGU event flag and the system setting an interrupt		1		cycles

47 PWM — Pulse width modulation

The PWM module enables the generation of pulse width modulated signals on GPIO. The module implements an up or up-and-down counter with four PWM channels that drive assigned GPIOs.

Three PWM modules can provide up to 12 PWM channels with individual frequency control in groups of up to four channels. Furthermore, a built-in decoder and EasyDMA capabilities make it possible to manipulate the PWM duty cycles without CPU intervention. Arbitrary duty-cycle sequences are read from Data RAM and can be chained to implement ping-pong buffering or repeated into complex loops.

Listed here are the main features of one PWM module:

- Fixed PWM base frequency with programmable clock divider
- Up to four PWM channels with individual polarity and duty-cycle values
- Edge or center-aligned pulses across PWM channels
- Multiple duty-cycle arrays (sequences) defined in Data RAM
- Autonomous and glitch-free update of duty cycle values directly from memory through EasyDMA
- Change of polarity, duty-cycle, and base frequency possibly on every PWM period
- Data RAM sequences can be repeated or connected into loops

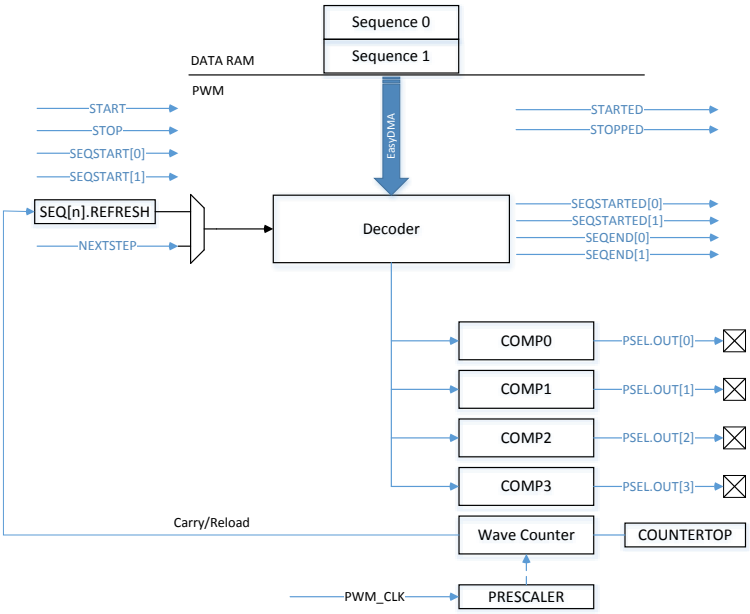

Figure 140: PWM Module

47.1 Wave counter

The wave counter is responsible for generating the pulses at a duty-cycle that depends on the compare values, and at a frequency that depends on COUNTERTOP.

There is one common 15-bit counter with four compare channels. Thus, all four channels will share the same period (PWM frequency), but can have individual duty-cycle and polarity. The polarity is set by the value read from RAM (see *Figure 143: Decoder memory access modes* on page 494), while the MODE register controls if the counter counts up, or up and down. The timer top value is controlled by the COUNTERTOP register. This register value in conjunction with the selected PRESCALER of the PWM_CLK will result in a given PWM period. A COUNTERTOP value smaller than the compare setting will result in a state where no PWM edges are generated. Respectively, OUT[n] is held high, given that the polarity is set to FallingEdge. All the compare registers are internal and can only be configured through the decoder presented later.

COUNTERTOP can be safely written at any time. It will get sampled following a START task. If DECODER.LOAD is anything else than WaveForm, it will also get sampled following a STARTSEQ[n] task,

and when loading a new value from RAM during a sequence playback. If DECODER.LOAD=WaveForm, the register value is ignored, and taken from RAM instead (see *Decoder with EasyDMA* on page 494 below).

Figure 141: PWM up counter example - FallingEdge polarity on page 492 shows the counter operating in up (MODE=PWM_MODE_Up) mode with three PWM channels with the same frequency but different duty cycle. The counter is automatically reset to zero when COUNTERTOP is reached and OUT[n] will invert. OUT[n] is held low if the compare value is 0 and held high respectively if set to COUNTERTOP given that the polarity is set to FallingEdge. Running in up counter mode will result in pulse widths that are edge-aligned. See the code example below:

```
uint16_t pwm_seq[4] = {PWM_CH0_DUTY, PWM_CH1_DUTY, PWM_CH2_DUTY,
 PWM_CH3_DUTY};
NRF_PWM0->PSEL.OUT[0] = (first_pin << PWM_PSEL_OUT_PIN_Pos) |
                        (PWM_PSEL_OUT_CONNECT_Connected <<
                                                PWM_PSEL_OUT_CONNECT_Pos);
NRF_PWM0->PSEL.OUT[1] = (second_pin << PWM_PSEL_OUT_PIN_Pos) |
                        (PWM_PSEL_OUT_CONNECT_Connected <<
                                                PWM_PSEL_OUT_CONNECT_Pos);
NRF_PWM0->ENABLE      = (PWM_ENABLE_ENABLE_Enabled << PWM_ENABLE_ENABLE_Pos);
NRF_PWM0->MODE        = (PWM_MODE_UPDOWN_Up << PWM_MODE_UPDOWN_Pos);
NRF_PWM0->PRESCALER   = (PWM_PRESCALER_PRESCALER_DIV_1 <<
                                                PWM_PRESCALER_PRESCALER_Pos);
NRF_PWM0->COUNTERTOP  = (16000 << PWM_COUNTERTOP_COUNTERTOP_Pos); //1 msec
NRF_PWM0->LOOP        = (PWM_LOOP_CNT_Disabled << PWM_LOOP_CNT_Pos);
NRF_PWM0->DECODER   = (PWM_DECODER_LOAD_Individual << PWM_DECODER_LOAD_Pos) |
                      (PWM_DECODER_MODE_RefreshCount << PWM_DECODER_MODE_Pos);
NRF_PWM0->SEQ[0].PTR  = ((uint32_t)(pwm_seq) << PWM_SEQ_PTR_PTR_Pos);
NRF_PWM0->SEQ[0].CNT  = ((sizeof(pwm_seq) / sizeof(uint16_t)) <<
                                                PWM_SEQ_CNT_CNT_Pos);
NRF_PWM0->SEQ[0].REFRESH  = 0;
NRF_PWM0->SEQ[0].ENDDELAY = 0;
NRF_PWM0->TASKS_SEQSTART[0] = 1;
```

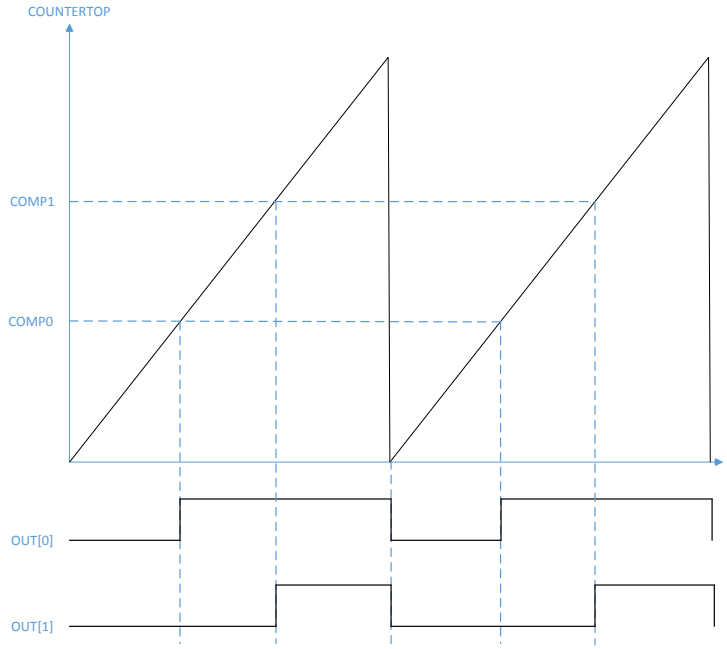

Figure 141: PWM up counter example - FallingEdge polarity

In up counting mode, the following formula can be used to compute PWM period and step size:

PWM period: $T_{PWM(Up)} = T_{PWM\_CLK} * COUNTERTOP$

Step width/Resolution: $T_{steps} = T_{PWM\_CLK}$

Figure 142: PWM up-and-down counter example on page 493 shows the counter operating in up and down mode with (MODE=PWM_MODE_UpAndDown) two PWM channels with the same frequency but different duty cycle and output polarity. The counter starts decrementing to zero when COUNTERTOP is reached and will invert the OUT[n] when compare value is hit for the second time. This results in a set of pulses that are center- aligned.

```
uint16_t pwm_seq[4] = {PWM_CH0_DUTY, PWM_CH1_DUTY, PWM_CH2_DUTY,
 PWM_CH3_DUTY};
NRF_PWM0->PSEL.OUT[0] = (first_pin << PWM_PSEL_OUT_PIN_Pos) |
                        (PWM_PSEL_OUT_CONNECT_Connected <<
                                                PWM_PSEL_OUT_CONNECT_Pos);
NRF_PWM0->PSEL.OUT[1] = (second_pin << PWM_PSEL_OUT_PIN_Pos) |
                        (PWM_PSEL_OUT_CONNECT_Connected <<
                                                PWM_PSEL_OUT_CONNECT_Pos);
NRF_PWM0->ENABLE      = (PWM_ENABLE_ENABLE_Enabled << PWM_ENABLE_ENABLE_Pos);
NRF_PWM0->MODE        = (PWM_MODE_UPDOWN_UpAndDown << PWM_MODE_UPDOWN_Pos);
NRF_PWM0->PRESCALER   = (PWM_PRESCALER_PRESCALER_DIV_1 <<
                                                PWM_PRESCALER_PRESCALER_Pos);
NRF_PWM0->COUNTERTOP  = (16000 << PWM_COUNTERTOP_COUNTERTOP_Pos); //1 msec
NRF_PWM0->LOOP        = (PWM_LOOP_CNT_Disabled << PWM_LOOP_CNT_Pos);
NRF_PWM0->DECODER   = (PWM_DECODER_LOAD_Individual << PWM_DECODER_LOAD_Pos) |
                      (PWM_DECODER_MODE_RefreshCount << PWM_DECODER_MODE_Pos);
NRF_PWM0->SEQ[0].PTR  = ((uint32_t)(pwm_seq) << PWM_SEQ_PTR_PTR_Pos);
NRF_PWM0->SEQ[0].CNT  = ((sizeof(pwm_seq) / sizeof(uint16_t)) <<
                                                PWM_SEQ_CNT_CNT_Pos);
NRF_PWM0->SEQ[0].REFRESH  = 0;
NRF_PWM0->SEQ[0].ENDDELAY = 0;
NRF_PWM0->TASKS_SEQSTART[0] = 1;
```

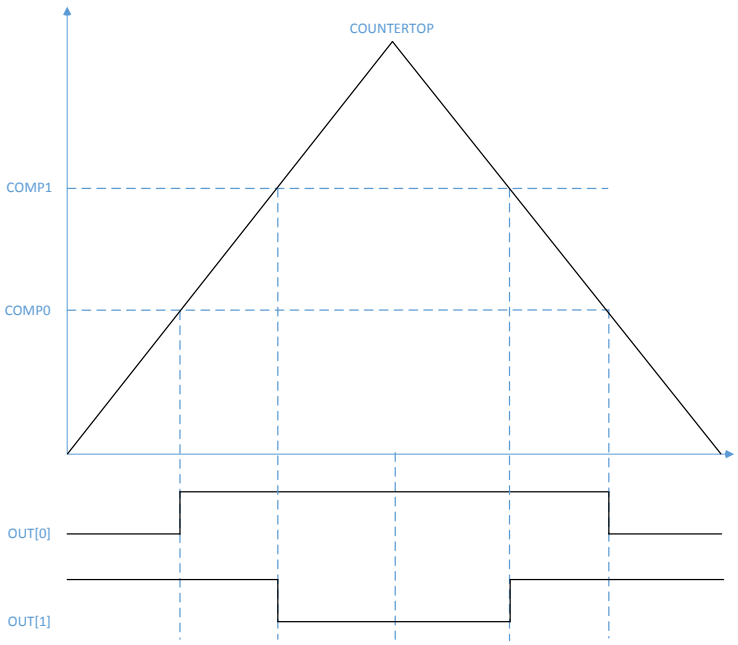

Figure 142: PWM up-and-down counter example

In up-and-down counting modes, the following formula can be used to compute PWM period and step size:

$T_{PWM(Up\ And\ Down)} = T_{PWM\_CLK} * 2 * COUNTERTOP$

Step width/Resolution: $T_{steps} = T_{PWM\_CLK} * 2$

47.2 Decoder with EasyDMA

The decoder uses EasyDMA to take PWM parameters stored in Data RAM by ways of EasyDMA and updates the internal compare registers of the wave counter based on the mode of operation.

The mentioned PWM parameters are organized into a sequence containing at least one half word (16 bit). Its most significant bit[15] denotes the polarity of the OUT[n] while bit[14:0] is the 15-bit compare value. See below for further details of these RAM defined registers.

Bit number				31	30	29	28	27	26	25	24	23	22	21	20	19	18	17	16	15	14	13	12	11	10	9	8	7	6	5	4	3	2	1	0
Id																				B	A	A	A	A	A	A	A	A	A	A	A	A	A	A	A
Reset 0x00000000				**0**	**0**	**0**	**0**	**0**	**0**	**0**	**0**	**0**	**0**	**0**	**0**	**0**	**0**	**0**	**0**	**0**	**0**	**0**	**0**	**0**	**0**	**0**	**0**	**0**	**0**	**0**	**0**	**0**	**0**	**0**	**0**
Id	**RW**	**Field**	**Value Id**	**Value**								**Description**																							
A	RW	COMPARE										Duty cycle setting - value loaded to internal compare register																							
B	RW	POLARITY										Edge polarity of GPIO.																							
			RisingEdge	0								First edge within the PWM period is rising																							
			FallingEdge	1								First edge within the PWM period is falling																							

The DECODER register controls how the RAM content is interpreted and loaded to the internal compare registers. The LOAD field can be used to control if the RAM values are loaded to all compare channels - or alternatively to update a group or all channels with individual values. *Figure 143: Decoder memory access modes* on page 494 illustrates how the parameters stored in RAM are organized and routed to the various compare channels in the different modes.

A special mode of operation is available when DECODER.LOAD is set to WaveForm. In this mode, up to three PWM channels can be enabled - OUT[0] to OUT[2]. In RAM, four values are loaded at a time: the first, second and third location are used to load the values, and the fourth RAM location is used to load the COUNTERTOP register. This way one can have up to three PWM channels with a frequency base that changes on a per PWM period basis. This mode of operation is useful for arbitrary wave form generation in applications such as LED lighting.

The register SEQ[n].REFRESH=N (one per sequence n=0 or 1) will instruct a new RAM stored pulse width value on every $(N+1)^{th}$ PWM period. Setting the register to zero will result in a new duty cycle update every PWM period as long as the minimum PWM period is observed.

Note that registers SEQ[n].REFRESH and SEQ[n].ENDDELAY are ignored when DECODER.MODE=NextStep . The next value is loaded upon receiving every NEXTSTEP task.

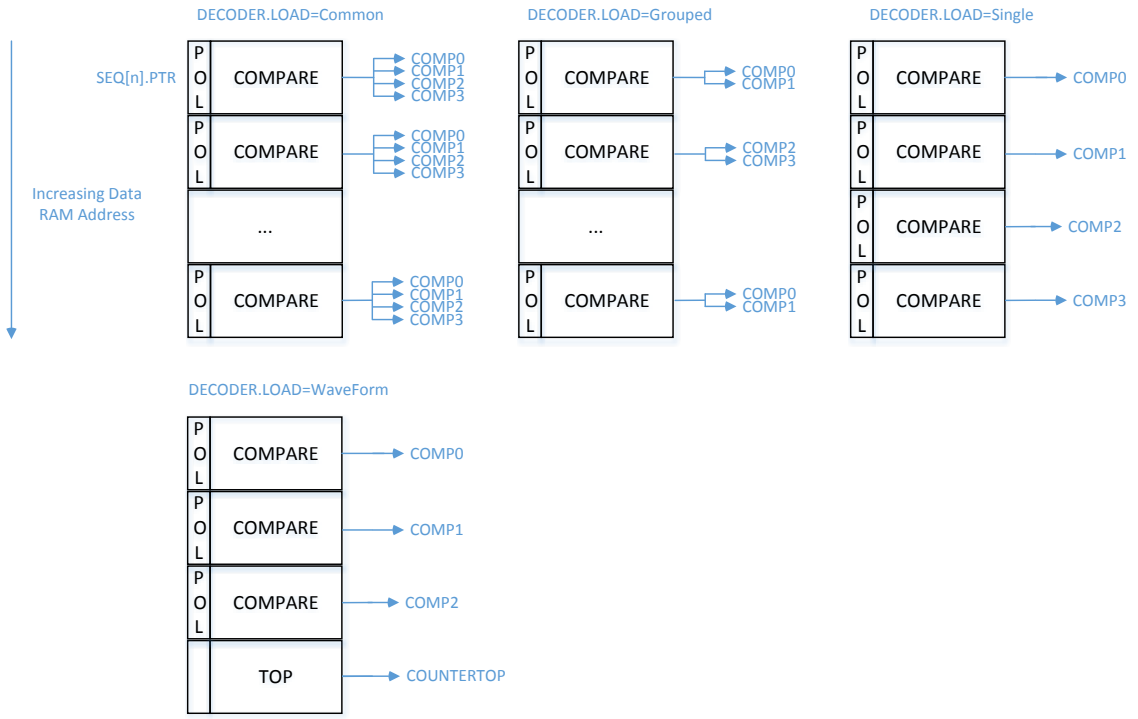

Figure 143: Decoder memory access modes

SEQ[n].PTR is the pointer used to fetch COMPARE values from RAM. If the SEQ[n].PTR is not pointing to the Data RAM region, an EasyDMA transfer may result in a HardFault or RAM corruption. See *Memory* on page 20 for more information about the different memory regions.

After the SEQ[n].PTR is set to the desired RAM location, the SEQ[n].CNT register must be set to the number of 16-bit half words in the sequence. It is important to observe that the Grouped and Single modes require one half word per group or one half word per channel respectively, and thus increases RAM size occupation. If PWM generation was not running yet at that point, sending the SEQSTART[n] task will load the first value from RAM, then start the PWM generation. A SEQSTARTED[n] event is generated as soon as the EasyDMA has read the first PWM parameter from RAM and the wave counter has started executing it. When LOOP.CNT=0, sequence n=0 or 1 is played back once. After the last value in the sequence has been loaded and started executing, a SEQEND[n] event is generated. The PWM generation will then continue with the last loaded value. See *Figure 144: Simple sequence example* on page 496 for an example of such simple playback.

To completely stop the PWM generation and force the associated pins to a defined state, a STOP task can be fired at any time. A STOPPED event is generated when the PWM generation has stopped at the end of currently running PWM period, and the pins go into their idle state as defined in GPIO->OUT. PWM generation can then only be restarted through a SEQSTART[n] task. SEQSTART[n] will resume PWM generation after having loaded the first value from the RAM buffer defined in the SEQ[n].PTR register.

The table below provides indication of when specific registers get sampled by the hardware. Care should be taken when updating these registers to avoid values to be applied earlier than expected.

Table 112: When to safely update PWM registers

Register	Taken into account by hardware	Recommended (safe) update
SEQ[n].PTR	When sending the SEQSTART[n] task	After having received the SEQSTARTED[n] event
SEQ[n].CNT	When sending the SEQSTART[n] task	After having received the SEQSTARTED[n] event
SEQ[0].ENDDELAY	When sending the SEQSTART[0] task	Before starting sequence [0] through a SEQSTART[0] task
	Every time a new value from sequence [0] has been loaded from RAM and gets applied to the Wave Counter (indicated by the PWMPERIODEND event)	When no more value from sequence [0] gets loaded from RAM (indicated by the SEQEND[0] event)
		At any time during sequence [1] (which starts when the SEQSTARTED[1] event is fired)
SEQ[1].ENDDELAY	When sending the SEQSTART[1] task	Before starting sequence [1] through a SEQSTART[1] task
	Every time a new value from sequence [1] has been loaded from RAM and gets applied to the Wave Counter (indicated by the PWMPERIODEND event)	When no more value from sequence [1] gets loaded from RAM (indicated by the SEQEND[1] event)
		At any time during sequence [0] (which starts when the SEQSTARTED[0] event is fired)
SEQ[0].REFRESH	When sending the SEQSTART[0] task	Before starting sequence [0] through a SEQSTART[0] task
	Every time a new value from sequence [0] has been loaded from RAM and gets applied to the Wave Counter (indicated by the PWMPERIODEND event)	At any time during sequence [1] (which starts when the SEQSTARTED[1] event is fired)
SEQ[1].REFRESH	When sending the SEQSTART[1] task	Before starting sequence [1] through a SEQSTART[1] task
	Every time a new value from sequence [1] has been loaded from RAM and gets applied to the Wave Counter (indicated by the PWMPERIODEND event)	At any time during sequence [0] (which starts when the SEQSTARTED[0] event is fired)
COUNTERTOP	In DECODER.LOAD=WaveForm: this register is ignored.	Before starting PWM generation through a SEQSTART[n] task
	In all other LOAD modes: at the end of current PWM period (indicated by the PWMPERIODEND event)	After a STOP task has been issued, and the STOPPED event has been received.
MODE	Immediately	Before starting PWM generation through a SEQSTART[n] task
		After a STOP task has been issued, and the STOPPED event has been received.
DECODER	Immediately	Before starting PWM generation through a SEQSTART[n] task
		After a STOP task has been issued, and the STOPPED event has been received.
PRESCALER	Immediately	Before starting PWM generation through a SEQSTART[n] task
		After a STOP task has been issued, and the STOPPED event has been received.
LOOP	Immediately	Before starting PWM generation through a SEQSTART[n] task
		After a STOP task has been issued, and the STOPPED event has been received.
PSEL.OUT[n]	Immediately	Before enabling the PWM instance through the ENABLE register

Important: SEQ[n].REFRESH and SEQ[n].ENDDELAY are ignored at the end of a complex sequence, indicated by a LOOPSDONE event. The reason for this is that the last value loaded from RAM is maintained until further action from software (restarting a new sequence, or stopping PWM generation).

Figure 144: Simple sequence example on page 496 depicts the source code used for configuration and timing details in a sequence where only sequence 0 is used and only run once with a new PWM duty cycle for each period.

```
NRF_PWM0->PSEL.OUT[0] = (first_pin << PWM_PSEL_OUT_PIN_Pos) |
                        (PWM_PSEL_OUT_CONNECT_Connected <<
                                                PWM_PSEL_OUT_CONNECT_Pos);
NRF_PWM0->ENABLE      = (PWM_ENABLE_ENABLE_Enabled << PWM_ENABLE_ENABLE_Pos);
NRF_PWM0->MODE        = (PWM_MODE_UPDOWN_Up << PWM_MODE_UPDOWN_Pos);
NRF_PWM0->PRESCALER   = (PWM_PRESCALER_PRESCALER_DIV_1 <<
                                                PWM_PRESCALER_PRESCALER_Pos);
NRF_PWM0->COUNTERTOP  = (16000 << PWM_COUNTERTOP_COUNTERTOP_Pos); //1 msec
NRF_PWM0->LOOP        = (PWM_LOOP_CNT_Disabled << PWM_LOOP_CNT_Pos);
NRF_PWM0->DECODER   = (PWM_DECODER_LOAD_Common << PWM_DECODER_LOAD_Pos) |
                      (PWM_DECODER_MODE_RefreshCount << PWM_DECODER_MODE_Pos);
NRF_PWM0->SEQ[0].PTR  = ((uint32_t)(seq0_ram) << PWM_SEQ_PTR_PTR_Pos);
NRF_PWM0->SEQ[0].CNT  = ((sizeof(seq0_ram) / sizeof(uint16_t)) <<
                                                PWM_SEQ_CNT_CNT_Pos);
NRF_PWM0->SEQ[0].REFRESH  = 0;
NRF_PWM0->SEQ[0].ENDDELAY = 0;
NRF_PWM0->TASKS_SEQSTART[0] = 1;
```

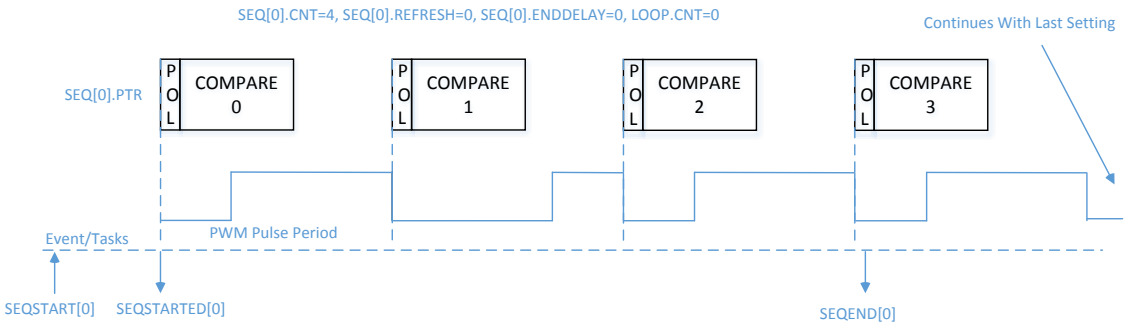

Figure 144: Simple sequence example

A more complex example is shown in *Figure 145: Example using two sequences* on page 497, where LOOP.CNT>0 . In this case, an automated playback takes place, consisting of SEQ[0], delay 0, SEQ[1], delay 1, then again SEQ[0], etc. The user can choose to start a complex playback with SEQ[0] or SEQ[1] through sending the SEQSTART[0] or SEQSTART[1] task.

The complex playback always ends with delay 1.

The two sequences 0 and 1 are defined with address of values tables in Data RAM (pointed by SEQ[n].PTR) and respective buffer size (SEQ[n].CNT). The rate at which a new value is loaded is defined individually for each sequence by SEQ[n].REFRESH . The chaining of sequence 1 following sequence 0 is implicit, the LOOP.CNT register allows the chaining of sequence 1 to sequence 0 for a determined number of times. In other words, it allows to repeat a complex sequence a number of times in a fully automated way.

In the example below, sequence 0 is defined with SEQ[0].REFRESH set to one - that means that a new PWM duty cycle is pushed every second PWM period. This complex sequence is started with the SEQSTART[0] task, so SEQ[0] is played first. Since SEQ[0].ENDDELAY=1 there will be one PWM period delay between last period on sequence 0 and the first period on sequence 1. Since SEQ[1].ENDDELAY=0 there is no delay 1, so SEQ[0] would be started immediately after the end of SEQ[1]. However, as LOOP.CNT is one, the playback stops after having played only once SEQ[1], and both SEQEND[1] and LOOPSDONE are generated (their order is not guaranteed in this case).

```
NRF_PWM0->PSEL.OUT[0] = (first_pin << PWM_PSEL_OUT_PIN_Pos) |
                        (PWM_PSEL_OUT_CONNECT_Connected <<
                                                PWM_PSEL_OUT_CONNECT_Pos);
NRF_PWM0->ENABLE      = (PWM_ENABLE_ENABLE_Enabled << PWM_ENABLE_ENABLE_Pos);
NRF_PWM0->MODE        = (PWM_MODE_UPDOWN_Up << PWM_MODE_UPDOWN_Pos);
NRF_PWM0->PRESCALER   = (PWM_PRESCALER_PRESCALER_DIV_1 <<
                                                PWM_PRESCALER_PRESCALER_Pos);
NRF_PWM0->COUNTERTOP  = (16000 << PWM_COUNTERTOP_COUNTERTOP_Pos); //1 msec
NRF_PWM0->LOOP        = (1 << PWM_LOOP_CNT_Pos);
NRF_PWM0->DECODER   = (PWM_DECODER_LOAD_Common << PWM_DECODER_LOAD_Pos) |
                      (PWM_DECODER_MODE_RefreshCount << PWM_DECODER_MODE_Pos);
NRF_PWM0->SEQ[0].PTR  = ((uint32_t)(seq0_ram) << PWM_SEQ_PTR_PTR_Pos);
NRF_PWM0->SEQ[0].CNT  = ((sizeof(seq0_ram) / sizeof(uint16_t)) <<
                                                PWM_SEQ_CNT_CNT_Pos);
NRF_PWM0->SEQ[0].REFRESH  = 1;
NRF_PWM0->SEQ[0].ENDDELAY = 1;
NRF_PWM0->SEQ[1].PTR  = ((uint32_t)(seq1_ram) << PWM_SEQ_PTR_PTR_Pos);
NRF_PWM0->SEQ[1].CNT  = ((sizeof(seq1_ram) / sizeof(uint16_t)) <<
                                                PWM_SEQ_CNT_CNT_Pos);
NRF_PWM0->SEQ[1].REFRESH  = 0;
NRF_PWM0->SEQ[1].ENDDELAY = 0;
NRF_PWM0->TASKS_SEQSTART[0] = 1;
```

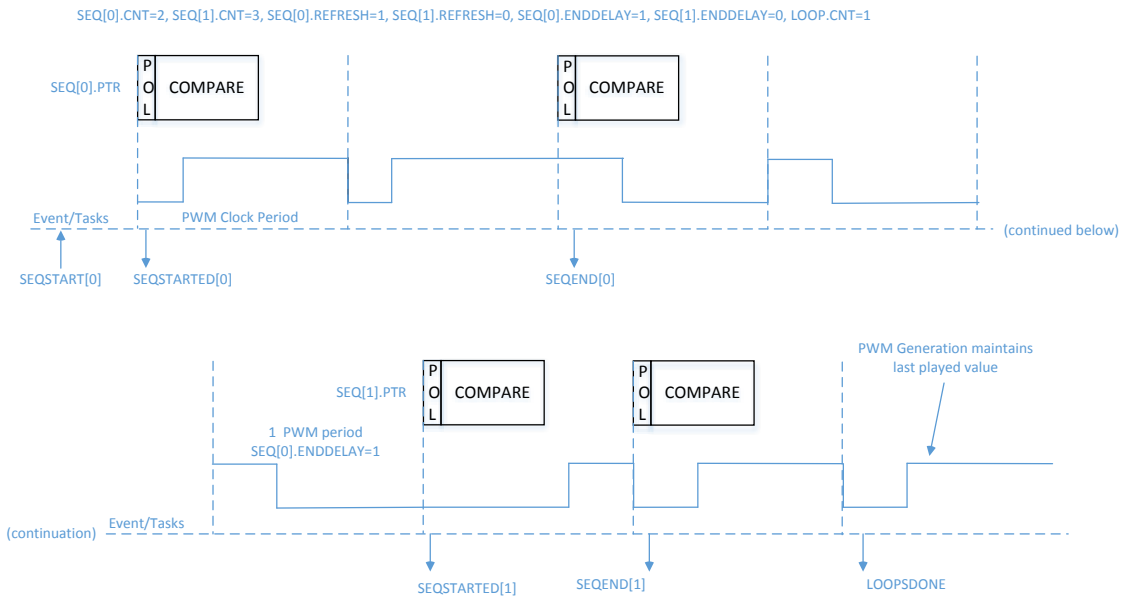

Figure 145: Example using two sequences

The decoder can also be configured to asynchronously load a new PWM duty cycle. If the DECODER.MODE register is set to NextStep - then the NEXTSTEP task will cause an update of the internal compare registers on the next PWM period.

The figures below provide an overview of each part of an arbitrary sequence, in various modes (LOOP.CNT=0 and LOOP.CNT>0). In particular are represented:

- Initial and final duty cycle on the PWM output(s)
- Chaining of SEQ[0] and SEQ[1] if LOOP.CNT>0
- Influence of registers on the sequence
- Events fired during a sequence
- DMA activity (loading of next value and applying it to the output(s))

Note that the single-shot example applies also to SEQ[1], only SEQ[0] is represented for simplicity.

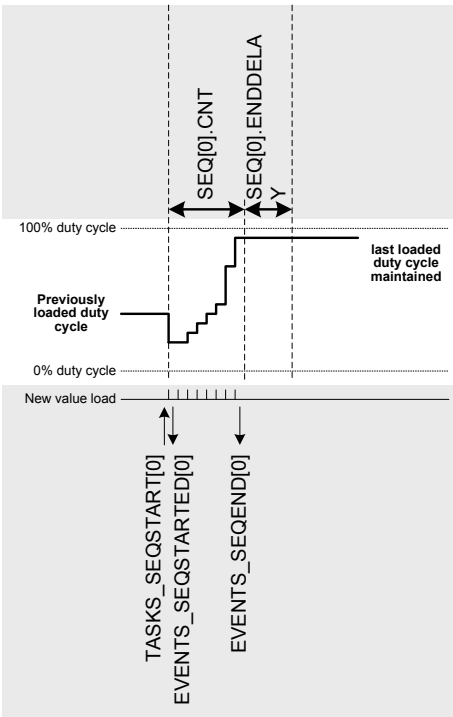

Figure 146: Single shot (LOOP.CNT=0)

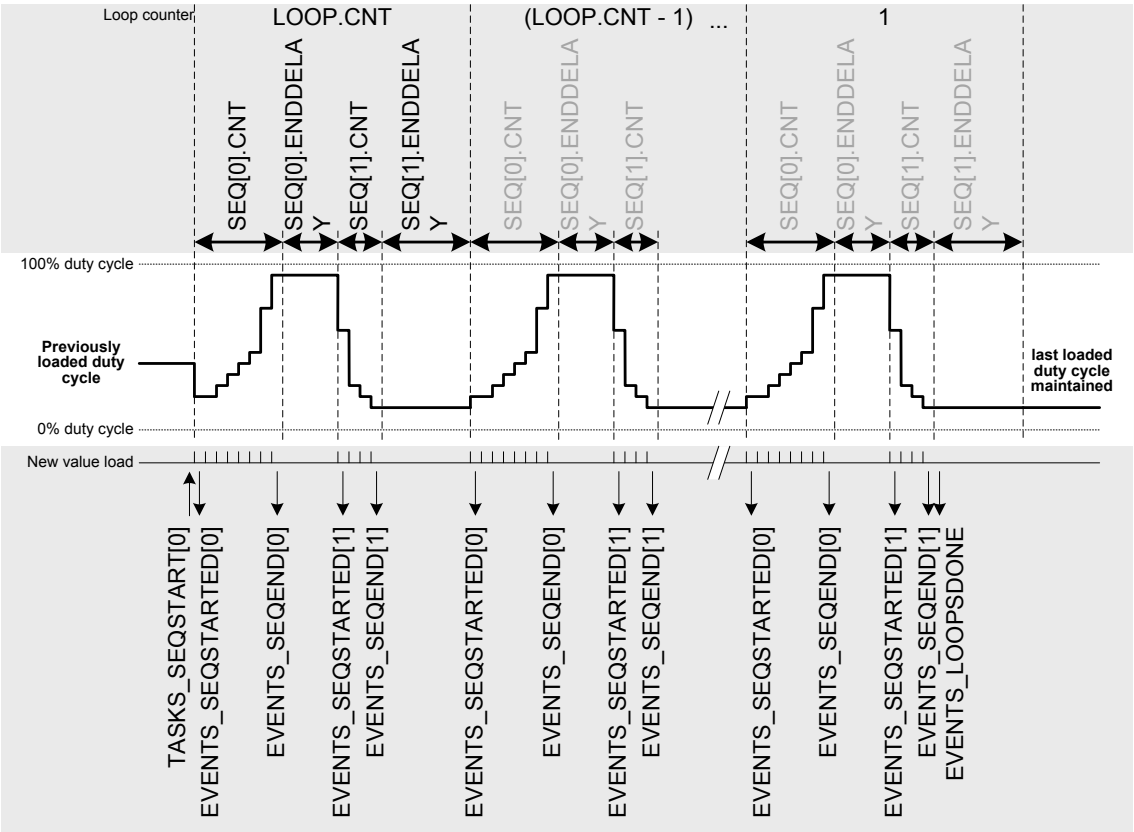

Figure 147: Complex sequence (LOOP.CNT>0) starting with SEQ[0]

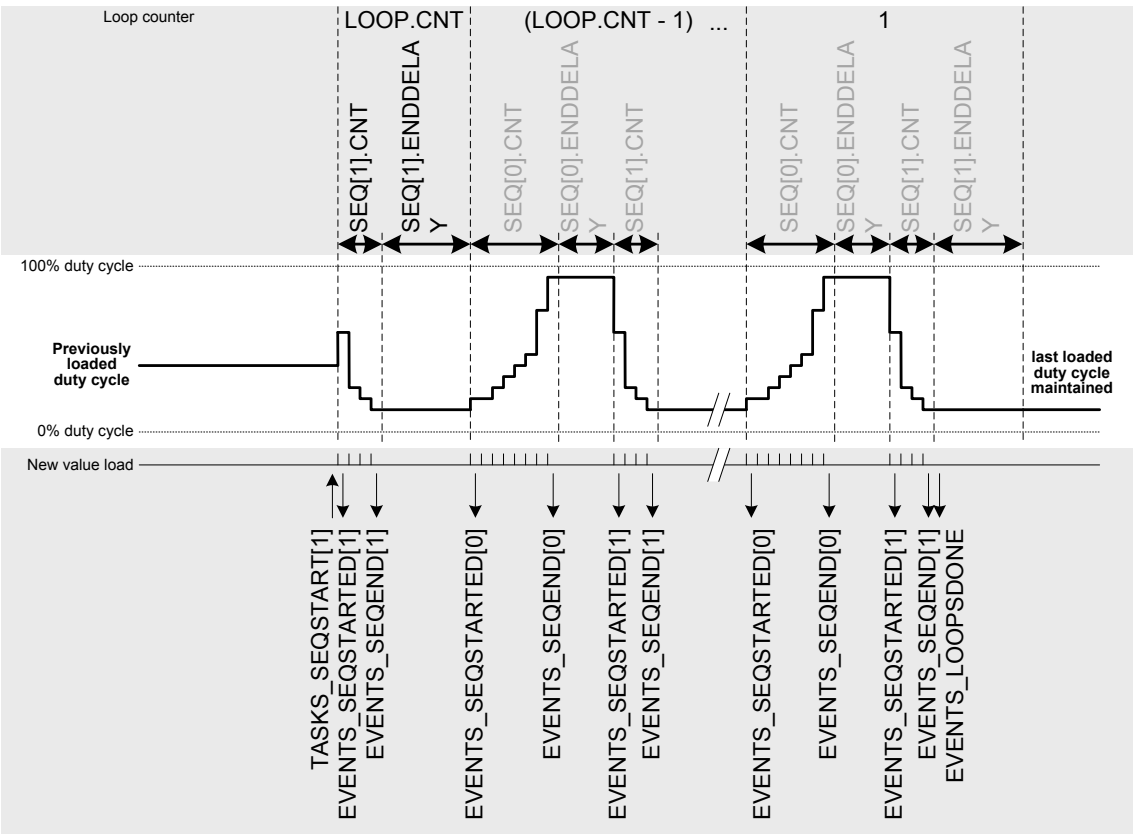

Figure 148: Complex sequence (LOOP.CNT>0) starting with SEQ[1]

Note that if a sequence is in use in a simple or complex sequence, it must have a length of SEQ[n].CNT > 0 .

47.3 Limitations

The previous compare value will be repeated if the PWM period is selected to be shorter than the time it takes for the EasyDMA to fetch from RAM and update the internal compare registers.

This is to ensure a glitch-free operation even if very short PWM periods are chosen.

47.4 Pin configuration

The OUT[n] (n=0..3) signals associated to each channel of the PWM module are mapped to physical pins according to the configuration specified in the respective PSEL.OUT[n] registers. If a PSEL.OUT[n].CONNECT is set to Disconnected, the associated PWM module signal will not be connected to any physical pins.

The PSEL.OUT[n] registers and their configurations are only used as long as the PWM module is enabled and PWM generation is active (wave counter started), and retained only as long as the device is in System ON mode, see *POWER* chapter for more information about power modes.

To ensure correct behaviour in the PWM module, the pins used by the PWM module must be configured in the GPIO peripheral as described in *Table 113: Recommended GPIO configuration before starting PWM generation* on page 500 before enabling the PWM module. The pins' idle state is defined by the OUT registers in the GPIO module. This is to ensure that the pins used by the PWM module are driven correctly, if PWM generation is stopped through a STOP task, the PWM module itself is temporarily disabled, or the device temporarily enters System OFF. This configuration must be retained in the GPIO for the selected IOs as long as the PWM module is supposed to be connected to an external PWM circuit.

Only one peripheral can be assigned to drive a particular GPIO pin at a time. Failing to do so may result in unpredictable behaviour.

Table 113: Recommended GPIO configuration before starting PWM generation

PWM signal	PWM pin	Direction	Output value	Comment
OUT[n]	As specified in PSEL.OUT[n] (n=0..3)	Output	0	Idle state defined in GPIO->OUT

47.5 Registers

Table 114: Instances

Base address	Peripheral	Instance	Description	Configuration
0x4001C000	PWM	PWM0	Pulse Width Modulation Unit 0	
0x40021000	PWM	PWM1	Pulse Width Modulation Unit 1	
0x40022000	PWM	PWM2	Pulse Width Modulation Unit 2	

Table 115: Register Overview

Register	Offset	Description
TASKS_STOP	0x004	Stops PWM pulse generation on all channels at the end of current PWM period, and stops sequence playback
TASKS_SEQSTART[0]	0x008	Loads the first PWM value on all enabled channels from sequence 0, and starts playing that sequence at the rate defined in SEQ[0]REFRESH and/or DECODER.MODE. Causes PWM generation to start it was not running.
TASKS_SEQSTART[1]	0x00C	Loads the first PWM value on all enabled channels from sequence 1, and starts playing that sequence at the rate defined in SEQ[1]REFRESH and/or DECODER.MODE. Causes PWM generation to start it was not running.
TASKS_NEXTSTEP	0x010	Steps by one value in the current sequence on all enabled channels if DECODER.MODE=NextStep. Does not cause PWM generation to start it was not running.
EVENTS_STOPPED	0x104	Response to STOP task, emitted when PWM pulses are no longer generated
EVENTS_SEQSTARTED[0]	0x108	First PWM period started on sequence 0
EVENTS_SEQSTARTED[1]	0x10C	First PWM period started on sequence 1
EVENTS_SEQEND[0]	0x110	Emitted at end of every sequence 0, when last value from RAM has been applied to wave counter
EVENTS_SEQEND[1]	0x114	Emitted at end of every sequence 1, when last value from RAM has been applied to wave counter
EVENTS_PWMPERIODEN	0x118	Emitted at the end of each PWM period
EVENTS_LOOPSDONE	0x11C	Concatenated sequences have been played the amount of times defined in LOOP.CNT
SHORTS	0x200	Shortcut register
INTEN	0x300	Enable or disable interrupt
INTENSET	0x304	Enable interrupt
INTENCLR	0x308	Disable interrupt
ENABLE	0x500	PWM module enable register
MODE	0x504	Selects operating mode of the wave counter
COUNTERTOP	0x508	Value up to which the pulse generator counter counts
PRESCALER	0x50C	Configuration for PWM_CLK
DECODER	0x510	Configuration of the decoder
LOOP	0x514	Amount of playback of a loop
SEQ[0].PTR	0x520	Beginning address in Data RAM of sequence A
SEQ[0].CNT	0x524	Amount of values (duty cycles) in sequence A
SEQ[0].REFRESH	0x528	Amount of additional PWM periods between samples loaded to compare register (load every CNT+1 PWM periods)
SEQ[0].ENDDELAY	0x52C	Time added after the sequence
SEQ[1].PTR	0x540	Beginning address in Data RAM of sequence A
SEQ[1].CNT	0x544	Amount of values (duty cycles) in sequence A
SEQ[1].REFRESH	0x548	Amount of additional PWM periods between samples loaded to compare register (load every CNT+1 PWM periods)
SEQ[1].ENDDELAY	0x54C	Time added after the sequence
PSEL.OUT[0]	0x560	Output pin select for PWM channel 0
PSEL.OUT[1]	0x564	Output pin select for PWM channel 1
PSEL.OUT[2]	0x568	Output pin select for PWM channel 2
PSEL.OUT[3]	0x56C	Output pin select for PWM channel 3

47.5.1 SHORTS

Address offset: 0x200

Shortcut register

Bit number				31	30	29	28	27	26	25	24	23	22	21	20	19	18	17	16	15	14	13	12	11	10	9	8	7	6	5	4	3	2	1	0
Id																															E	D	C	B	A
Reset 0x00000000				**0**	**0**	**0**	**0**	**0**	**0**	**0**	**0**	**0**	**0**	**0**	**0**	**0**	**0**	**0**	**0**	**0**	**0**	**0**	**0**	**0**	**0**	**0**	**0**	**0**	**0**	**0**	**0**	**0**	**0**	**0**	**0**
Id	**RW**	**Field**	**Value Id**	**Value**																															**Description**
A	RW	SEQEND0_STOP																																	Shortcut between SEQEND[0] event and STOP task See *EVENTS_SEQEND[0]* and *TASKS_STOP*
			Disabled	0																															Disable shortcut
			Enabled	1																															Enable shortcut
B	RW	SEQEND1_STOP																																	Shortcut between SEQEND[1] event and STOP task See *EVENTS_SEQEND[1]* and *TASKS_STOP*
			Disabled	0																															Disable shortcut
			Enabled	1																															Enable shortcut
C	RW	LOOPSDONE_SEQSTART0																																	Shortcut between LOOPSDONE event and SEQSTART[0] task See *EVENTS_LOOPSDONE* and *TASKS_SEQSTART[0]*
			Disabled	0																															Disable shortcut
			Enabled	1																															Enable shortcut
D	RW	LOOPSDONE_SEQSTART1																																	Shortcut between LOOPSDONE event and SEQSTART[1] task See *EVENTS_LOOPSDONE* and *TASKS_SEQSTART[1]*
			Disabled	0																															Disable shortcut
			Enabled	1																															Enable shortcut
E	RW	LOOPSDONE_STOP																																	Shortcut between LOOPSDONE event and STOP task See *EVENTS_LOOPSDONE* and *TASKS_STOP*
			Disabled	0																															Disable shortcut
			Enabled	1																															Enable shortcut

47.5.2 INTEN

Address offset: 0x300

Enable or disable interrupt

Bit number				31	30	29	28	27	26	25	24	23	22	21	20	19	18	17	16	15	14	13	12	11	10	9	8	7	6	5	4	3	2	1	0
Id																												H	G	F	E	D	C	B	
Reset 0x00000000				**0**	**0**	**0**	**0**	**0**	**0**	**0**	**0**	**0**	**0**	**0**	**0**	**0**	**0**	**0**	**0**	**0**	**0**	**0**	**0**	**0**	**0**	**0**	**0**	**0**	**0**	**0**	**0**	**0**	**0**	**0**	**0**
Id	**RW**	**Field**	**Value Id**	**Value**																															**Description**
B	RW	STOPPED																																	Enable or disable interrupt for STOPPED event See *EVENTS_STOPPED*
			Disabled	0																															Disable
			Enabled	1																															Enable
C	RW	SEQSTARTED0																																	Enable or disable interrupt for SEQSTARTED[0] event See *EVENTS_SEQSTARTED[0]*
			Disabled	0																															Disable
			Enabled	1																															Enable
D	RW	SEQSTARTED1																																	Enable or disable interrupt for SEQSTARTED[1] event See *EVENTS_SEQSTARTED[1]*
			Disabled	0																															Disable
			Enabled	1																															Enable
E	RW	SEQEND0																																	Enable or disable interrupt for SEQEND[0] event See *EVENTS_SEQEND[0]*
			Disabled	0																															Disable
			Enabled	1																															Enable
F	RW	SEQEND1																																	Enable or disable interrupt for SEQEND[1] event

Bit number				31	30	29	28	27	26	25	24	23	22	21	20	19	18	17	16	15	14	13	12	11	10	9	8	7	6	5	4	3	2	1	0
Id																												H	G	F	E	D	C	B	
Reset 0x00000000				**0**	**0**	**0**	**0**	**0**	**0**	**0**	**0**	**0**	**0**	**0**	**0**	**0**	**0**	**0**	**0**	**0**	**0**	**0**	**0**	**0**	**0**	**0**	**0**	**0**	**0**	**0**	**0**	**0**	**0**	**0**	**0**
Id	**RW**	**Field**	**Value Id**	**Value**								**Description**																							
												See *EVENTS_SEQEND[1]*																							
			Disabled	0								Disable																							
			Enabled	1								Enable																							
G	RW	PWMPERIODEND										Enable or disable interrupt for PWMPERIODEND event See *EVENTS_PWMPERIODEND*																							
			Disabled	0								Disable																							
			Enabled	1								Enable																							
H	RW	LOOPSDONE										Enable or disable interrupt for LOOPSDONE event See *EVENTS_LOOPSDONE*																							
			Disabled	0								Disable																							
			Enabled	1								Enable																							

47.5.3 INTENSET

Address offset: 0x304

Enable interrupt

Bit number				31	30	29	28	27	26	25	24	23	22	21	20	19	18	17	16	15	14	13	12	11	10	9	8	7	6	5	4	3	2	1	0
Id																												H	G	F	E	D	C	B	
Reset 0x00000000				**0**	**0**	**0**	**0**	**0**	**0**	**0**	**0**	**0**	**0**	**0**	**0**	**0**	**0**	**0**	**0**	**0**	**0**	**0**	**0**	**0**	**0**	**0**	**0**	**0**	**0**	**0**	**0**	**0**	**0**	**0**	**0**
Id	**RW**	**Field**	**Value Id**	**Value**								**Description**																							
B	RW	STOPPED										Write '1' to Enable interrupt for STOPPED event See *EVENTS_STOPPED*																							
			Set	1								Enable																							
			Disabled	0								Read: Disabled																							
			Enabled	1								Read: Enabled																							
C	RW	SEQSTARTED0										Write '1' to Enable interrupt for SEQSTARTED[0] event See *EVENTS_SEQSTARTED[0]*																							
			Set	1								Enable																							
			Disabled	0								Read: Disabled																							
			Enabled	1								Read: Enabled																							
D	RW	SEQSTARTED1										Write '1' to Enable interrupt for SEQSTARTED[1] event See *EVENTS_SEQSTARTED[1]*																							
			Set	1								Enable																							
			Disabled	0								Read: Disabled																							
			Enabled	1								Read: Enabled																							
E	RW	SEQEND0										Write '1' to Enable interrupt for SEQEND[0] event See *EVENTS_SEQEND[0]*																							
			Set	1								Enable																							
			Disabled	0								Read: Disabled																							
			Enabled	1								Read: Enabled																							
F	RW	SEQEND1										Write '1' to Enable interrupt for SEQEND[1] event See *EVENTS_SEQEND[1]*																							
			Set	1								Enable																							
			Disabled	0								Read: Disabled																							
			Enabled	1								Read: Enabled																							
G	RW	PWMPERIODEND										Write '1' to Enable interrupt for PWMPERIODEND event See *EVENTS_PWMPERIODEND*																							
			Set	1								Enable																							
			Disabled	0								Read: Disabled																							
			Enabled	1								Read: Enabled																							
H	RW	LOOPSDONE										Write '1' to Enable interrupt for LOOPSDONE event																							

Bit number				31	30	29	28	27	26	25	24	23	22	21	20	19	18	17	16	15	14	13	12	11	10	9	8	7	6	5	4	3	2	1	0
Id																												H	G	F	E	D	C	B	
Reset 0x00000000				**0**	**0**	**0**	**0**	**0**	**0**	**0**	**0**	**0**	**0**	**0**	**0**	**0**	**0**	**0**	**0**	**0**	**0**	**0**	**0**	**0**	**0**	**0**	**0**	**0**	**0**	**0**	**0**	**0**	**0**	**0**	**0**
Id	**RW**	**Field**	**Value Id**	**Value**																								**Description**							
																												See *EVENTS_LOOPSDONE*							
			Set	1																								Enable							
			Disabled	0																								Read: Disabled							
			Enabled	1																								Read: Enabled							

47.5.4 INTENCLR

Address offset: 0x308

Disable interrupt

Bit number				31	30	29	28	27	26	25	24	23	22	21	20	19	18	17	16	15	14	13	12	11	10	9	8	7	6	5	4	3	2	1	0
Id																												H	G	F	E	D	C	B	
Reset 0x00000000				**0**	**0**	**0**	**0**	**0**	**0**	**0**	**0**	**0**	**0**	**0**	**0**	**0**	**0**	**0**	**0**	**0**	**0**	**0**	**0**	**0**	**0**	**0**	**0**	**0**	**0**	**0**	**0**	**0**	**0**	**0**	**0**
Id	**RW**	**Field**	**Value Id**	**Value**																								**Description**							
B	RW	STOPPED																										Write '1' to Disable interrupt for STOPPED event See *EVENTS_STOPPED*							
			Clear	1																								Disable							
			Disabled	0																								Read: Disabled							
			Enabled	1																								Read: Enabled							
C	RW	SEQSTARTED0																										Write '1' to Disable interrupt for SEQSTARTED[0] event See *EVENTS_SEQSTARTED[0]*							
			Clear	1																								Disable							
			Disabled	0																								Read: Disabled							
			Enabled	1																								Read: Enabled							
D	RW	SEQSTARTED1																										Write '1' to Disable interrupt for SEQSTARTED[1] event See *EVENTS_SEQSTARTED[1]*							
			Clear	1																								Disable							
			Disabled	0																								Read: Disabled							
			Enabled	1																								Read: Enabled							
E	RW	SEQEND0																										Write '1' to Disable interrupt for SEQEND[0] event See *EVENTS_SEQEND[0]*							
			Clear	1																								Disable							
			Disabled	0																								Read: Disabled							
			Enabled	1																								Read: Enabled							
F	RW	SEQEND1																										Write '1' to Disable interrupt for SEQEND[1] event See *EVENTS_SEQEND[1]*							
			Clear	1																								Disable							
			Disabled	0																								Read: Disabled							
			Enabled	1																								Read: Enabled							
G	RW	PWMPERIODEND																										Write '1' to Disable interrupt for PWMPERIODEND event See *EVENTS_PWMPERIODEND*							
			Clear	1																								Disable							
			Disabled	0																								Read: Disabled							
			Enabled	1																								Read: Enabled							
H	RW	LOOPSDONE																										Write '1' to Disable interrupt for LOOPSDONE event See *EVENTS_LOOPSDONE*							
			Clear	1																								Disable							
			Disabled	0																								Read: Disabled							
			Enabled	1																								Read: Enabled							

47.5.5 ENABLE

Address offset: 0x500

PWM module enable register

Bit number				31	30	29	28	27	26	25	24	23	22	21	20	19	18	17	16	15	14	13	12	11	10	9	8	7	6	5	4	3	2	1	0
Id																																			A
Reset 0x00000000				**0**	**0**	**0**	**0**	**0**	**0**	**0**	**0**	**0**	**0**	**0**	**0**	**0**	**0**	**0**	**0**	**0**	**0**	**0**	**0**	**0**	**0**	**0**	**0**	**0**	**0**	**0**	**0**	**0**	**0**	**0**	**0**
Id	**RW**	**Field**	**Value Id**	**Value**																									**Description**						
A	RW	ENABLE																											Enable or disable PWM module						
			Disabled	0																									Disabled						
			Enabled	1																									Enable						

47.5.6 MODE

Address offset: 0x504

Selects operating mode of the wave counter

Bit number				31	30	29	28	27	26	25	24	23	22	21	20	19	18	17	16	15	14	13	12	11	10	9	8	7	6	5	4	3	2	1	0
Id																																			A
Reset 0x00000000				**0**	**0**	**0**	**0**	**0**	**0**	**0**	**0**	**0**	**0**	**0**	**0**	**0**	**0**	**0**	**0**	**0**	**0**	**0**	**0**	**0**	**0**	**0**	**0**	**0**	**0**	**0**	**0**	**0**	**0**	**0**	**0**
Id	**RW**	**Field**	**Value Id**	**Value**																									**Description**						
A	RW	UPDOWN																											Selects up or up and down as wave counter mode						
			Up	0																									Up counter - edge aligned PWM duty-cycle						
			UpAndDown	1																									Up and down counter - center aligned PWM duty cycle						

47.5.7 COUNTERTOP

Address offset: 0x508

Value up to which the pulse generator counter counts

Bit number				31	30	29	28	27	26	25	24	23	22	21	20	19	18	17	16	15	14	13	12	11	10	9	8	7	6	5	4	3	2	1	0
Id																					A	A	A	A	A	A	A	A	A	A	A	A	A	A	A
Reset 0x000003FF				**0**	**0**	**0**	**0**	**0**	**0**	**0**	**0**	**0**	**0**	**0**	**0**	**0**	**0**	**0**	**0**	**0**	**0**	**0**	**0**	**0**	**0**	**1**	**1**	**1**	**1**	**1**	**1**	**1**	**1**	**1**	**1**
Id	**RW**	**Field**	**Value Id**	**Value**																									**Description**						
A	RW	COUNTERTOP		[3..32767]																									Value up to which the pulse generator counter counts. This register is ignored when DECODER.MODE=WaveForm and only values from RAM will be used.						

47.5.8 PRESCALER

Address offset: 0x50C

Configuration for PWM_CLK

Bit number				31	30	29	28	27	26	25	24	23	22	21	20	19	18	17	16	15	14	13	12	11	10	9	8	7	6	5	4	3	2	1	0
Id																																	A	A	A
Reset 0x00000000				**0**	**0**	**0**	**0**	**0**	**0**	**0**	**0**	**0**	**0**	**0**	**0**	**0**	**0**	**0**	**0**	**0**	**0**	**0**	**0**	**0**	**0**	**0**	**0**	**0**	**0**	**0**	**0**	**0**	**0**	**0**	**0**
Id	**RW**	**Field**	**Value Id**	**Value**																									**Description**						
A	RW	PRESCALER																											Pre-scaler of PWM_CLK						
			DIV_1	0																									Divide by 1 (16MHz)						
			DIV_2	1																									Divide by 2 (8MHz)						
			DIV_4	2																									Divide by 4 (4MHz)						
			DIV_8	3																									Divide by 8 (2MHz)						
			DIV_16	4																									Divide by 16 (1MHz)						
			DIV_32	5																									Divide by 32 (500kHz)						
			DIV_64	6																									Divide by 64 (250kHz)						
			DIV_128	7																									Divide by 128 (125kHz)						

47.5.9 DECODER

Address offset: 0x510

Configuration of the decoder

Bit number				31	30	29	28	27	26	25	24	23	22	21	20	19	18	17	16	15	14	13	12	11	10	9	8	7	6	5	4	3	2	1	0
Id																											B						A	A	A
Reset 0x00000000				**0**	**0**	**0**	**0**	**0**	**0**	**0**	**0**	**0**	**0**	**0**	**0**	**0**	**0**	**0**	**0**	**0**	**0**	**0**	**0**	**0**	**0**	**0**	**0**	**0**	**0**	**0**	**0**	**0**	**0**	**0**	**0**
Id	**RW**	**Field**	**Value Id**	**Value**																															
A	RW	LOAD																																	
			Common	0																															
			Grouped	1																															
			Individual	2																															
			WaveForm	3																															
B	RW	MODE																																	
			RefreshCount	0																															
			NextStep	1																															

Id	RW	Field	Value Id	Value	Description
A	RW	LOAD			How a sequence is read from RAM and spread to the compare register
			Common	0	1st half word (16-bit) used in all PWM channels 0..3
			Grouped	1	1st half word (16-bit) used in channel 0..1; 2nd word in channel 2..3
			Individual	2	1st half word (16-bit) in ch.0; 2nd in ch.1; ...; 4th in ch.3
			WaveForm	3	1st half word (16-bit) in ch.0; 2nd in ch.1; ...; 4th in COUNTERTOP
B	RW	MODE			Selects source for advancing the active sequence
			RefreshCount	0	SEQ[n].REFRESH is used to determine loading internal compare registers
			NextStep	1	NEXTSTEP task causes a new value to be loaded to internal compare registers

47.5.10 LOOP

Address offset: 0x514

Amount of playback of a loop

Bit number				31	30	29	28	27	26	25	24	23	22	21	20	19	18	17	16	15	14	13	12	11	10	9	8	7	6	5	4	3	2	1	0
Id																				A	A	A	A	A	A	A	A	A	A	A	A	A	A	A	A
Reset 0x00000000				**0**	**0**	**0**	**0**	**0**	**0**	**0**	**0**	**0**	**0**	**0**	**0**	**0**	**0**	**0**	**0**	**0**	**0**	**0**	**0**	**0**	**0**	**0**	**0**	**0**	**0**	**0**	**0**	**0**	**0**	**0**	**0**
Id	**RW**	**Field**	**Value Id**	**Value**																															
A	RW	CNT																																	
			Disabled	0																															

Id	RW	Field	Value Id	Value	Description
A	RW	CNT			Amount of playback of pattern cycles
			Disabled	0	Looping disabled (stop at the end of the sequence)

47.5.11 SEQ[0].PTR

Address offset: 0x520

Beginning address in Data RAM of sequence A

Bit number				31	30	29	28	27	26	25	24	23	22	21	20	19	18	17	16	15	14	13	12	11	10	9	8	7	6	5	4	3	2	1	0
Id				A	A	A	A	A	A	A	A	A	A	A	A	A	A	A	A	A	A	A	A	A	A	A	A	A	A	A	A	A	A	A	A
Reset 0x00000000				**0**	**0**	**0**	**0**	**0**	**0**	**0**	**0**	**0**	**0**	**0**	**0**	**0**	**0**	**0**	**0**	**0**	**0**	**0**	**0**	**0**	**0**	**0**	**0**	**0**	**0**	**0**	**0**	**0**	**0**	**0**	**0**
Id	**RW**	**Field**	**Value Id**	**Value**																															
A	RW	PTR																																	

Id	RW	Field	Value Id	Value	Description
A	RW	PTR			Beginning address in Data RAM of sequence A

47.5.12 SEQ[0].CNT

Address offset: 0x524

Amount of values (duty cycles) in sequence A

Bit number				31	30	29	28	27	26	25	24	23	22	21	20	19	18	17	16	15	14	13	12	11	10	9	8	7	6	5	4	3	2	1	0
Id																					A	A	A	A	A	A	A	A	A	A	A	A	A	A	A
Reset 0x00000000				**0**	**0**	**0**	**0**	**0**	**0**	**0**	**0**	**0**	**0**	**0**	**0**	**0**	**0**	**0**	**0**	**0**	**0**	**0**	**0**	**0**	**0**	**0**	**0**	**0**	**0**	**0**	**0**	**0**	**0**	**0**	**0**
Id	**RW**	**Field**	**Value Id**	**Value**																															
A	RW	CNT																																	
			Disabled	0																															

Id	RW	Field	Value Id	Value	Description
A	RW	CNT			Amount of values (duty cycles) in sequence A
			Disabled	0	Sequence is disabled, and shall not be started as it is empty

47.5.13 SEQ[0].REFRESH

Address offset: 0x528

Amount of additional PWM periods between samples loaded to compare register (load every CNT+1 PWM periods)

Bit number				31	30	29	28	27	26	25	24	23	22	21	20	19	18	17	16	15	14	13	12	11	10	9	8	7	6	5	4	3	2	1	0
Id												A	A	A	A	A	A	A	A	A	A	A	A	A	A	A	A	A	A	A	A	A	A	A	A
Reset 0x00000001				**0**	**0**	**0**	**0**	**0**	**0**	**0**	**0**	**0**	**0**	**0**	**0**	**0**	**0**	**0**	**0**	**0**	**0**	**0**	**0**	**0**	**0**	**0**	**0**	**0**	**0**	**0**	**0**	**0**	**0**	**0**	**1**
Id	**RW**	**Field**	**Value Id**	**Value**								**Description**																							
A	RW	CNT										Amount of additional PWM periods between samples loaded to compare register (load every CNT+1 PWM periods)																							
			Continuous	0								Update every PWM period																							

47.5.14 SEQ[0].ENDDELAY

Address offset: 0x52C

Time added after the sequence

Bit number				31	30	29	28	27	26	25	24	23	22	21	20	19	18	17	16	15	14	13	12	11	10	9	8	7	6	5	4	3	2	1	0
Id												A	A	A	A	A	A	A	A	A	A	A	A	A	A	A	A	A	A	A	A	A	A	A	A
Reset 0x00000000				**0**	**0**	**0**	**0**	**0**	**0**	**0**	**0**	**0**	**0**	**0**	**0**	**0**	**0**	**0**	**0**	**0**	**0**	**0**	**0**	**0**	**0**	**0**	**0**	**0**	**0**	**0**	**0**	**0**	**0**	**0**	**0**
Id	**RW**	**Field**	**Value Id**	**Value**								**Description**																							
A	RW	CNT										Time added after the sequence in PWM periods																							

47.5.15 SEQ[1].PTR

Address offset: 0x540

Beginning address in Data RAM of sequence A

Bit number				31	30	29	28	27	26	25	24	23	22	21	20	19	18	17	16	15	14	13	12	11	10	9	8	7	6	5	4	3	2	1	0
Id				A	A	A	A	A	A	A	A	A	A	A	A	A	A	A	A	A	A	A	A	A	A	A	A	A	A	A	A	A	A	A	A
Reset 0x00000000				**0**	**0**	**0**	**0**	**0**	**0**	**0**	**0**	**0**	**0**	**0**	**0**	**0**	**0**	**0**	**0**	**0**	**0**	**0**	**0**	**0**	**0**	**0**	**0**	**0**	**0**	**0**	**0**	**0**	**0**	**0**	**0**
Id	**RW**	**Field**	**Value Id**	**Value**								**Description**																							
A	RW	PTR										Beginning address in Data RAM of sequence A																							

47.5.16 SEQ[1].CNT

Address offset: 0x544

Amount of values (duty cycles) in sequence A

Bit number				31	30	29	28	27	26	25	24	23	22	21	20	19	18	17	16	15	14	13	12	11	10	9	8	7	6	5	4	3	2	1	0
Id																					A	A	A	A	A	A	A	A	A	A	A	A	A	A	A
Reset 0x00000000				**0**	**0**	**0**	**0**	**0**	**0**	**0**	**0**	**0**	**0**	**0**	**0**	**0**	**0**	**0**	**0**	**0**	**0**	**0**	**0**	**0**	**0**	**0**	**0**	**0**	**0**	**0**	**0**	**0**	**0**	**0**	**0**
Id	**RW**	**Field**	**Value Id**	**Value**								**Description**																							
A	RW	CNT										Amount of values (duty cycles) in sequence A																							
			Disabled	0								Sequence is disabled, and shall not be started as it is empty																							

47.5.17 SEQ[1].REFRESH

Address offset: 0x548

Amount of additional PWM periods between samples loaded to compare register (load every CNT+1 PWM periods)

Bit number				31	30	29	28	27	26	25	24	23	22	21	20	19	18	17	16	15	14	13	12	11	10	9	8	7	6	5	4	3	2	1	0
Id												A	A	A	A	A	A	A	A	A	A	A	A	A	A	A	A	A	A	A	A	A	A	A	A
Reset 0x00000001				**0**	**0**	**0**	**0**	**0**	**0**	**0**	**0**	**0**	**0**	**0**	**0**	**0**	**0**	**0**	**0**	**0**	**0**	**0**	**0**	**0**	**0**	**0**	**0**	**0**	**0**	**0**	**0**	**0**	**0**	**0**	**1**
Id	**RW**	**Field**	**Value Id**	**Value**								**Description**																							
A	RW	CNT										Amount of additional PWM periods between samples loaded to compare register (load every CNT+1 PWM periods)																							
			Continuous	0								Update every PWM period																							

47.5.18 SEQ[1].ENDDELAY

Address offset: 0x54C

Time added after the sequence

Bit number				31	30	29	28	27	26	25	24	23	22	21	20	19	18	17	16	15	14	13	12	11	10	9	8	7	6	5	4	3	2	1	0
Id												A	A	A	A	A	A	A	A	A	A	A	A	A	A	A	A	A	A	A	A	A	A	A	A
Reset 0x00000000				**0**	**0**	**0**	**0**	**0**	**0**	**0**	**0**	**0**	**0**	**0**	**0**	**0**	**0**	**0**	**0**	**0**	**0**	**0**	**0**	**0**	**0**	**0**	**0**	**0**	**0**	**0**	**0**	**0**	**0**	**0**	**0**
Id	**RW**	**Field**	**Value Id**	**Value**								**Description**																							
A	RW	CNT										Time added after the sequence in PWM periods																							

47.5.19 PSEL.OUT[0]

Address offset: 0x560

Output pin select for PWM channel 0

Bit number				31	30	29	28	27	26	25	24	23	22	21	20	19	18	17	16	15	14	13	12	11	10	9	8	7	6	5	4	3	2	1	0
Id				C																											A	A	A	A	A
Reset 0xFFFFFFFF				**1**	**1**	**1**	**1**	**1**	**1**	**1**	**1**	**1**	**1**	**1**	**1**	**1**	**1**	**1**	**1**	**1**	**1**	**1**	**1**	**1**	**1**	**1**	**1**	**1**	**1**	**1**	**1**	**1**	**1**	**1**	**1**
Id	**RW**	**Field**	**Value Id**	**Value**								**Description**																							
A	RW	PIN		[0..31]								Pin number																							
C	RW	CONNECT										Connection																							
			Disconnected	1								Disconnect																							
			Connected	0								Connect																							

47.5.20 PSEL.OUT[1]

Address offset: 0x564

Output pin select for PWM channel 1

Bit number				31	30	29	28	27	26	25	24	23	22	21	20	19	18	17	16	15	14	13	12	11	10	9	8	7	6	5	4	3	2	1	0
Id				C																											A	A	A	A	A
Reset 0xFFFFFFFF				**1**	**1**	**1**	**1**	**1**	**1**	**1**	**1**	**1**	**1**	**1**	**1**	**1**	**1**	**1**	**1**	**1**	**1**	**1**	**1**	**1**	**1**	**1**	**1**	**1**	**1**	**1**	**1**	**1**	**1**	**1**	**1**
Id	**RW**	**Field**	**Value Id**	**Value**								**Description**																							
A	RW	PIN		[0..31]								Pin number																							
C	RW	CONNECT										Connection																							
			Disconnected	1								Disconnect																							
			Connected	0								Connect																							

47.5.21 PSEL.OUT[2]

Address offset: 0x568

Output pin select for PWM channel 2

Bit number				31	30	29	28	27	26	25	24	23	22	21	20	19	18	17	16	15	14	13	12	11	10	9	8	7	6	5	4	3	2	1	0
Id				C																											A	A	A	A	A
Reset 0xFFFFFFFF				**1**	**1**	**1**	**1**	**1**	**1**	**1**	**1**	**1**	**1**	**1**	**1**	**1**	**1**	**1**	**1**	**1**	**1**	**1**	**1**	**1**	**1**	**1**	**1**	**1**	**1**	**1**	**1**	**1**	**1**	**1**	**1**
Id	**RW**	**Field**	**Value Id**	**Value**								**Description**																							
A	RW	PIN		[0..31]								Pin number																							
C	RW	CONNECT										Connection																							
			Disconnected	1								Disconnect																							
			Connected	0								Connect																							

47.5.22 PSEL.OUT[3]

Address offset: 0x56C

Output pin select for PWM channel 3

Bit number				31	30	29	28	27	26	25	24	23	22	21	20	19	18	17	16	15	14	13	12	11	10	9	8	7	6	5	4	3	2	1	0
Id				C																											A	A	A	A	A
Reset 0xFFFFFFFF				**1**	**1**	**1**	**1**	**1**	**1**	**1**	**1**	**1**	**1**	**1**	**1**	**1**	**1**	**1**	**1**	**1**	**1**	**1**	**1**	**1**	**1**	**1**	**1**	**1**	**1**	**1**	**1**	**1**	**1**	**1**	**1**
Id	**RW**	**Field**	**Value Id**	**Value**								**Description**																							
A	RW	PIN		[0..31]								Pin number																							
C	RW	CONNECT										Connection																							
			Disconnected	1								Disconnect																							

Bit number				31	30	29	28	27	26	25	24	23	22	21	20	19	18	17	16	15	14	13	12	11	10	9	8	7	6	5	4	3	2	1	0
Id				C																											A	A	A	A	A
Reset 0xFFFFFFFF				**1**	**1**	**1**	**1**	**1**	**1**	**1**	**1**	**1**	**1**	**1**	**1**	**1**	**1**	**1**	**1**	**1**	**1**	**1**	**1**	**1**	**1**	**1**	**1**	**1**	**1**	**1**	**1**	**1**	**1**	**1**	**1**
Id	**RW**	**Field**	**Value Id**	**Value**								**Description**																							
			Connected	0								Connect																							

47.6 Electrical Specification

47.6.1 PWM Electrical Specification

Symbol	Description	Min.	Typ.	Max.	Units
$I_{PWM,16MHz}$	PWM run current, Prescaler set to DIV_1 (16 MHz), excluding DMA and GPIO		200		µA
$I_{PWM,8MHz}$	PWM run current, Prescaler set to DIV_2 (8 MHz), excluding DMA and GPIO		150		µA
$I_{PWM,125kHz}$	PWM run current, Prescaler set to DIV_128 (125 kHz), excluding DMA and GPIO		150		µA

48 SPI — Serial peripheral interface master

The SPI master provides a simple CPU interface which includes a TXD register for sending data and an RXD register for receiving data. This section is added for legacy support for now.

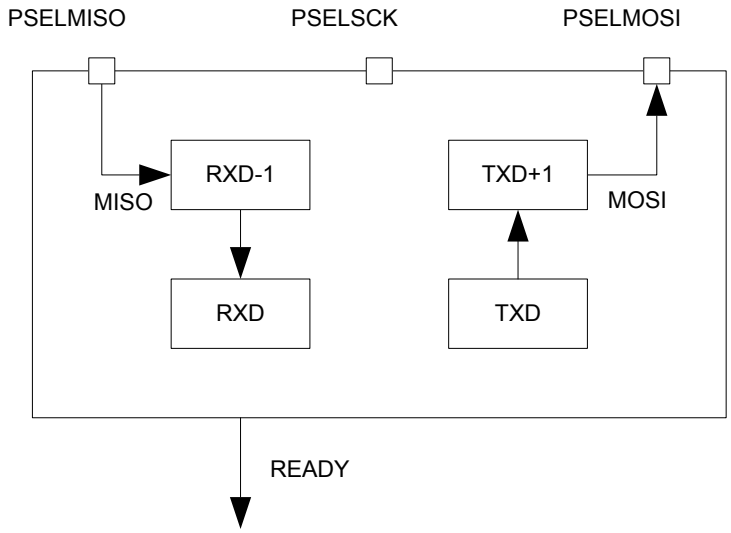

Figure 149: SPI master

RXD-1 and TXD+1 illustrate the double buffered version of RXD and TXD respectively.

48.1 Functional description

The TXD and RXD registers are double-buffered to enable some degree of uninterrupted data flow in and out of the SPI master.

The SPI master does not implement support for chip select directly. Therefore, the CPU must use available GPIOs to select the correct slave and control this independently of the SPI master. The SPI master supports SPI modes 0 through 3.

Table 116: SPI modes

Mode	Clock polarity CPOL	Clock phase CPHA
SPI_MODE	0 (Leading)	0 (Active High)
SPI_MODE	0 (Leading)	1 (Active Low)
SPI_MODE	1 (Trailing)	0 (Active High)
SPI_MODE	1 (Trailing)	1 (Active Low)

48.1.1 SPI master mode pin configuration

The different signals SCK, MOSI, and MISO associated with the SPI master are mapped to physical pins.

This mapping is according to the configuration specified in the PSEL.SCK, PSEL.MOSI, and PSEL.MISO registers respectively. If a value of 0xFFFFFFFF is specified in any of these registers, the associated SPI master signal is not connected to any physical pin. The PSEL.SCK, PSEL.MOSI, and PSEL.MISO registers and their configurations are only used as long as the SPI master is enabled, and retained only as long as the device is in ON mode. PSEL.SCK, PSEL.MOSI, and PSEL.MISO must only be configured when the SPI master is disabled.

To secure correct behavior in the SPI, the pins used by the SPI must be configured in the GPIO peripheral as described in *Table 117: GPIO configuration* on page 510 prior to enabling the SPI. The SCK must always be connected to a pin, and that pin's input buffer must always be connected for the SPI to work. This configuration must be retained in the GPIO for the selected IOs as long as the SPI is enabled.

Only one peripheral can be assigned to drive a particular GPIO pin at a time, failing to do so may result in unpredictable behavior.

Table 117: GPIO configuration

SPI master signal	SPI master pin	Direction	Output value
SCK	As specified in PSEL.SCK	Output	Same as CONFIG.CPOL
MOSI	As specified in PSEL.MOSI	Output	0
MISO	As specified in PSEL.MISO	Input	Not applicable

48.1.2 Shared resources

The SPI shares registers and other resources with other peripherals that have the same ID as the SPI. Therefore, the user must disable all peripherals that have the same ID as the SPI before the SPI can be configured and used.

Disabling a peripheral that has the same ID as the SPI will not reset any of the registers that are shared with the SPI. It is therefore important to configure all relevant SPI registers explicitly to secure that it operates correctly.

See the Instantiation table in *Instantiation* on page 21 for details on peripherals and their IDs.

48.1.3 SPI master transaction sequence

An SPI master transaction is started by writing the first byte, which is to be transmitted by the SPI master, to the TXD register.

Since the transmitter is double buffered, the second byte can be written to the TXD register immediately after the first one. The SPI master will then send these bytes in the order they are written to the TXD register.

The SPI master is a synchronous interface, and for every byte that is sent, a different byte will be received at the same time; this is illustrated in *Figure 150: SPI master transaction* on page 511. Bytes that are received will be moved to the RXD register where the CPU can extract them by reading the register. The RXD register is double buffered in the same way as the TXD register, and a second byte can therefore be received at the same time as the first byte is being extracted from RXD by the CPU. The SPI master will generate a READY event every time a new byte is moved to the RXD register. The double buffered byte will be moved from RXD-1 to RXD as soon as the first byte is extracted from RXD. The SPI master will stop when there are no more bytes to send in TXD and TXD+1.

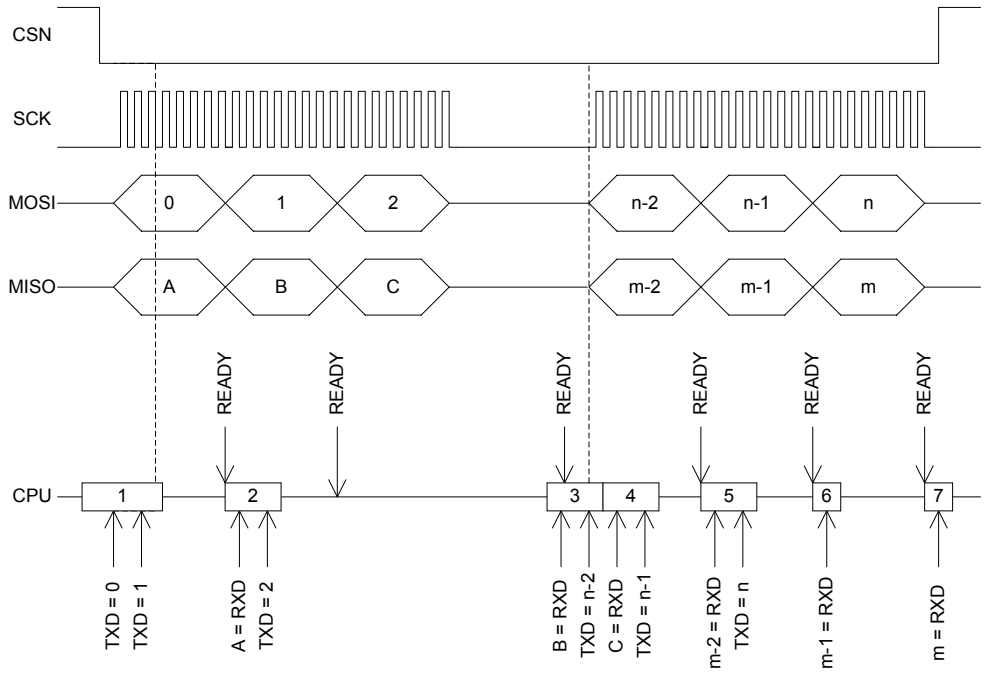

Figure 150: SPI master transaction

The READY event of the third byte transaction is delayed until B is extracted from RXD in occurrence number 3 on the horizontal lifeline. The reason for this is that the third event is generated first when C is moved from RXD-1 to RXD after B is read.

The SPI master will move the incoming byte to the RXD register after a short delay following the SCK clock period of the last bit in the byte. This also means that the READY event will be delayed accordingly, see *Figure 151: SPI master transaction* on page 511. Therefore, it is important that you always clear the READY event, even if the RXD register and the data that is being received is not used.

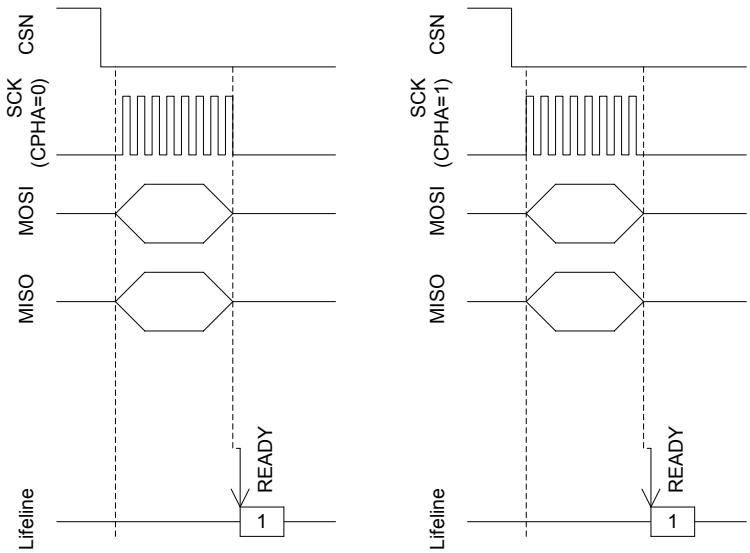

Figure 151: SPI master transaction

48.2 Registers

Table 118: Instances

Base address	Peripheral	Instance	Description	Configuration	
0x40003000	SPI	SPI0	SPI master 0		Deprecated
0x40004000	SPI	SPI1	SPI master 1		Deprecated
0x40023000	SPI	SPI2	SPI master 2.		Deprecated

Table 119: Register Overview

Register	Offset	Description
EVENTS_READY	0x108	TXD byte sent and RXD byte received
INTENSET	0x304	Enable interrupt
INTENCLR	0x308	Disable interrupt
ENABLE	0x500	Enable SPI
PSEL.SCK	0x508	Pin select for SCK
PSEL.MOSI	0x50C	Pin select for MOSI
PSEL.MISO	0x510	Pin select for MISO
RXD	0x518	RXD register
TXD	0x51C	TXD register
FREQUENCY	0x524	SPI frequency
CONFIG	0x554	Configuration register

48.2.1 INTENSET

Address offset: 0x304

Enable interrupt

Bit number	31	30	29	28	27	26	25	24	23	22	21	20	19	18	17	16	15	14	13	12	11	10	9	8	7	6	5	4	3	2	1	0
Id																														A		
Reset 0x00000000	**0**	**0**	**0**	**0**	**0**	**0**	**0**	**0**	**0**	**0**	**0**	**0**	**0**	**0**	**0**	**0**	**0**	**0**	**0**	**0**	**0**	**0**	**0**	**0**	**0**	**0**	**0**	**0**	**0**	**0**	**0**	**0**

Id	RW	Field	Value Id	Value	Description
A	RW	READY			Write '1' to Enable interrupt for READY event
					See *EVENTS_READY*
			Set	1	Enable
			Disabled	0	Read: Disabled
			Enabled	1	Read: Enabled

48.2.2 INTENCLR

Address offset: 0x308

Disable interrupt

Bit number	31	30	29	28	27	26	25	24	23	22	21	20	19	18	17	16	15	14	13	12	11	10	9	8	7	6	5	4	3	2	1	0
Id																														A		
Reset 0x00000000	**0**	**0**	**0**	**0**	**0**	**0**	**0**	**0**	**0**	**0**	**0**	**0**	**0**	**0**	**0**	**0**	**0**	**0**	**0**	**0**	**0**	**0**	**0**	**0**	**0**	**0**	**0**	**0**	**0**	**0**	**0**	**0**

Id	RW	Field	Value Id	Value	Description
A	RW	READY			Write '1' to Disable interrupt for READY event
					See *EVENTS_READY*
			Clear	1	Disable
			Disabled	0	Read: Disabled
			Enabled	1	Read: Enabled

48.2.3 ENABLE

Address offset: 0x500

Enable SPI

Bit number				31	30	29	28	27	26	25	24	23	22	21	20	19	18	17	16	15	14	13	12	11	10	9	8	7	6	5	4	3	2	1	0
Id																																A	A	A	A
Reset 0x00000000				**0**	**0**	**0**	**0**	**0**	**0**	**0**	**0**	**0**	**0**	**0**	**0**	**0**	**0**	**0**	**0**	**0**	**0**	**0**	**0**	**0**	**0**	**0**	**0**	**0**	**0**	**0**	**0**	**0**	**0**	**0**	**0**
Id	**RW**	**Field**	**Value Id**	**Value**																									**Description**						
A	RW	ENABLE																											Enable or disable SPI						
			Disabled	0																									Disable SPI						
			Enabled	1																									Enable SPI						

48.2.4 PSEL.SCK

Address offset: 0x508

Pin select for SCK

Bit number				31	30	29	28	27	26	25	24	23	22	21	20	19	18	17	16	15	14	13	12	11	10	9	8	7	6	5	4	3	2	1	0
Id				A	A	A	A	A	A	A	A	A	A	A	A	A	A	A	A	A	A	A	A	A	A	A	A	A	A	A	A	A	A	A	A
Reset 0xFFFFFFFF				**1**	**1**	**1**	**1**	**1**	**1**	**1**	**1**	**1**	**1**	**1**	**1**	**1**	**1**	**1**	**1**	**1**	**1**	**1**	**1**	**1**	**1**	**1**	**1**	**1**	**1**	**1**	**1**	**1**	**1**	**1**	**1**
Id	**RW**	**Field**	**Value Id**	**Value**																									**Description**						
A	RW	PSELSCK		[0..31]																									Pin number configuration for SPI SCK signal						
			Disconnected	0xFFFFFFFF																									Disconnect						

48.2.5 PSEL.MOSI

Address offset: 0x50C

Pin select for MOSI

Bit number				31	30	29	28	27	26	25	24	23	22	21	20	19	18	17	16	15	14	13	12	11	10	9	8	7	6	5	4	3	2	1	0
Id				A	A	A	A	A	A	A	A	A	A	A	A	A	A	A	A	A	A	A	A	A	A	A	A	A	A	A	A	A	A	A	A
Reset 0xFFFFFFFF				**1**	**1**	**1**	**1**	**1**	**1**	**1**	**1**	**1**	**1**	**1**	**1**	**1**	**1**	**1**	**1**	**1**	**1**	**1**	**1**	**1**	**1**	**1**	**1**	**1**	**1**	**1**	**1**	**1**	**1**	**1**	**1**
Id	**RW**	**Field**	**Value Id**	**Value**																									**Description**						
A	RW	PSELMOSI		[0..31]																									Pin number configuration for SPI MOSI signal						
			Disconnected	0xFFFFFFFF																									Disconnect						

48.2.6 PSEL.MISO

Address offset: 0x510

Pin select for MISO

Bit number				31	30	29	28	27	26	25	24	23	22	21	20	19	18	17	16	15	14	13	12	11	10	9	8	7	6	5	4	3	2	1	0
Id				A	A	A	A	A	A	A	A	A	A	A	A	A	A	A	A	A	A	A	A	A	A	A	A	A	A	A	A	A	A	A	A
Reset 0xFFFFFFFF				**1**	**1**	**1**	**1**	**1**	**1**	**1**	**1**	**1**	**1**	**1**	**1**	**1**	**1**	**1**	**1**	**1**	**1**	**1**	**1**	**1**	**1**	**1**	**1**	**1**	**1**	**1**	**1**	**1**	**1**	**1**	**1**
Id	**RW**	**Field**	**Value Id**	**Value**																									**Description**						
A	RW	PSELMISO		[0..31]																									Pin number configuration for SPI MISO signal						
			Disconnected	0xFFFFFFFF																									Disconnect						

48.2.7 RXD

Address offset: 0x518

RXD register

Bit number				31	30	29	28	27	26	25	24	23	22	21	20	19	18	17	16	15	14	13	12	11	10	9	8	7	6	5	4	3	2	1	0
Id																												A	A	A	A	A	A	A	A
Reset 0x00000000				**0**	**0**	**0**	**0**	**0**	**0**	**0**	**0**	**0**	**0**	**0**	**0**	**0**	**0**	**0**	**0**	**0**	**0**	**0**	**0**	**0**	**0**	**0**	**0**	**0**	**0**	**0**	**0**	**0**	**0**	**0**	**0**
Id	**RW**	**Field**	**Value Id**	**Value**																									**Description**						
A	R	RXD																											RX data received. Double buffered						

48.2.8 TXD

Address offset: 0x51C

TXD register

Bit number				31	30	29	28	27	26	25	24	23	22	21	20	19	18	17	16	15	14	13	12	11	10	9	8	7	6	5	4	3	2	1	0
Id																												A	A	A	A	A	A	A	A
Reset 0x00000000				**0**	**0**	**0**	**0**	**0**	**0**	**0**	**0**	**0**	**0**	**0**	**0**	**0**	**0**	**0**	**0**	**0**	**0**	**0**	**0**	**0**	**0**	**0**	**0**	**0**	**0**	**0**	**0**	**0**	**0**	**0**	**0**
Id	**RW**	**Field**	**Value Id**	**Value**								**Description**																							
A	RW	TXD										TX data to send. Double buffered																							

48.2.9 FREQUENCY

Address offset: 0x524

SPI frequency

Bit number				31	30	29	28	27	26	25	24	23	22	21	20	19	18	17	16	15	14	13	12	11	10	9	8	7	6	5	4	3	2	1	0
Id				A	A	A	A	A	A	A	A	A	A	A	A	A	A	A	A	A	A	A	A	A	A	A	A	A	A	A	A	A	A	A	A
Reset 0x04000000				**0**	**0**	**0**	**0**	**0**	**1**	**0**	**0**	**0**	**0**	**0**	**0**	**0**	**0**	**0**	**0**	**0**	**0**	**0**	**0**	**0**	**0**	**0**	**0**	**0**	**0**	**0**	**0**	**0**	**0**	**0**	**0**
Id	**RW**	**Field**	**Value Id**	**Value**								**Description**																							
A	RW	FREQUENCY										SPI master data rate																							
			K125	0x02000000								125 kbps																							
			K250	0x04000000								250 kbps																							
			K500	0x08000000								500 kbps																							
			M1	0x10000000								1 Mbps																							
			M2	0x20000000								2 Mbps																							
			M4	0x40000000								4 Mbps																							
			M8	0x80000000								8 Mbps																							

48.2.10 CONFIG

Address offset: 0x554

Configuration register

Bit number				31	30	29	28	27	26	25	24	23	22	21	20	19	18	17	16	15	14	13	12	11	10	9	8	7	6	5	4	3	2	1	0
Id																																	C	B	A
Reset 0x00000000				**0**	**0**	**0**	**0**	**0**	**0**	**0**	**0**	**0**	**0**	**0**	**0**	**0**	**0**	**0**	**0**	**0**	**0**	**0**	**0**	**0**	**0**	**0**	**0**	**0**	**0**	**0**	**0**	**0**	**0**	**0**	**0**
Id	**RW**	**Field**	**Value Id**	**Value**								**Description**																							
A	RW	ORDER										Bit order																							
			MsbFirst	0								Most significant bit shifted out first																							
			LsbFirst	1								Least significant bit shifted out first																							
B	RW	CPHA										Serial clock (SCK) phase																							
			Leading	0								Sample on leading edge of clock, shift serial data on trailing edge																							
			Trailing	1								Sample on trailing edge of clock, shift serial data on leading edge																							
C	RW	CPOL										Serial clock (SCK) polarity																							
			ActiveHigh	0								Active high																							
			ActiveLow	1								Active low																							

48.3 Electrical Specification

48.3.1 SPI master interface

Symbol	Description	Min.	Typ.	Max.	Units
f_{SPI}	Bit rates for SPI[39]			8[40]	Mbps
$I_{SPI,2Mbps}$	Run current for SPI, 2 Mbps			50	µA
$I_{SPI,8Mbps}$	Run current for SPI, 8 Mbps			50	µA
$I_{SPI,IDLE}$	Idle current for SPI (STARTed, no CSN activity)		<1		µA

[39] Higher bit rates may require GPIOs to be set as High Drive, see GPIO chapter for more details.

[40] The actual maximum data rate depends on the slave's CLK to MISO and MOSI setup and hold timings.

Symbol	Description	Min.	Typ.	Max.	Units
$t_{SPI,START,LP}$	Time from writing TXD register to transmission started, low power mode		$t_{SPI,START,CL}$ + t_{START_HFIN}		µs
$t_{SPI,START,CL}$	Time from writing TXD register to transmission started, constant latency mode		1		µs

48.3.2 Serial Peripheral Interface (SPI) Master timing specifications

Symbol	Description	Min.	Typ.	Max.	Units
$t_{SPI,CSCK,8Mbps}$	SCK period at 8Mbps		125		ns
$t_{SPI,CSCK,4Mbps}$	SCK period at 4Mbps		250		ns
$t_{SPI,CSCK,2Mbps}$	SCK period at 2Mbps		500		ns
$t_{SPI,RSCK,LD}$	SCK rise time, low drive[a]			$t_{RF,25pF}$	
$t_{SPI,RSCK,HD}$	SCK rise time, high drive[a]			$t_{HRF,25pF}$	
$t_{SPI,FSCK,LD}$	SCK fall time, low drive[a]			$t_{RF,25pF}$	
$t_{SPI,FSCK,HD}$	SCK fall time, high drive[a]			$t_{HRF,25pF}$	
$t_{SPI,WHSCK}$	SCK high time[a]	$(0.5*t_{CSCK})$ $- t_{RSCK}$			
$t_{SPI,WLSCK}$	SCK low time[a]	$(0.5*t_{CSCK})$ $- t_{FSCK}$			
$t_{SPI,SUMI}$	MISO to CLK edge setup time	19			ns
$t_{SPI,HMI}$	CLK edge to MISO hold time	18			ns
$t_{SPI,VMO}$	CLK edge to MOSI valid			59	ns
$t_{SPI,HMO}$	MOSI hold time after CLK edge	20			ns

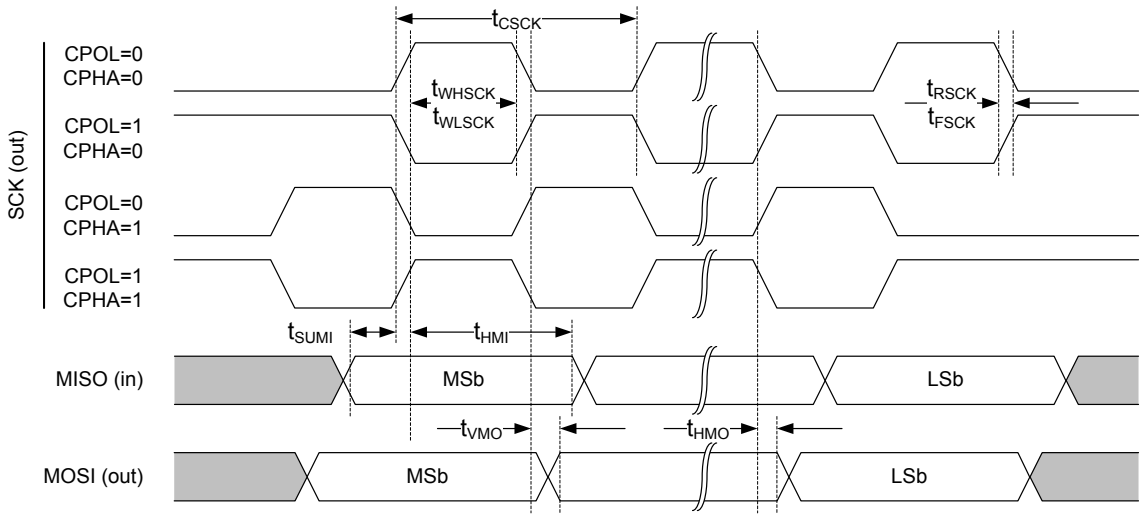

Figure 152: SPI master timing diagram

[a] At 25pF load, including GPIO capacitance, see GPIO spec.

49 TWI — I²C compatible two-wire interface

The TWI master is compatible with I²C operating at 100 kHz and 400 kHz.

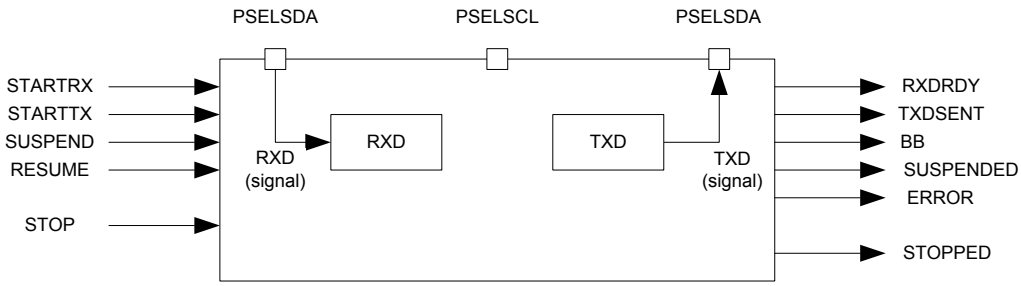

Figure 153: TWI master's main features

49.1 Functional description

This TWI master is not compatible with CBUS. The TWI transmitter and receiver are single buffered.

See, *Figure 153: TWI master's main features* on page 516.

A TWI setup comprising one master and three slaves is illustrated in *Figure 154: A typical TWI setup comprising one master and three slaves* on page 516. This TWI master is only able to operate as the only master on the TWI bus.

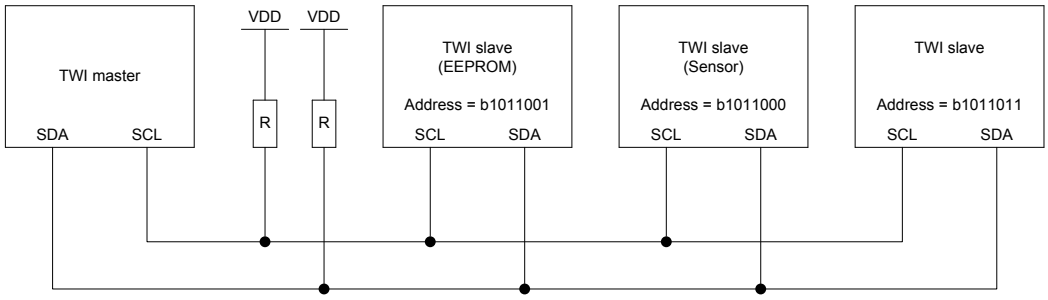

Figure 154: A typical TWI setup comprising one master and three slaves

This TWI master supports clock stretching performed by the slaves. The TWI master is started by triggering the STARTTX or STARTRX tasks, and stopped by triggering the STOP task.

If a NACK is clocked in from the slave, the TWI master will generate an ERROR event.

49.2 Master mode pin configuration

The different signals SCL and SDA associated with the TWI master are mapped to physical pins according to the configuration specified in the PSELSCL and PSELSDA registers respectively.

If a value of 0xFFFFFFFF is specified in any of these registers, the associated TWI master signal is not connected to any physical pin. The PSELSCL and PSELSDA registers and their configurations are only used

as long as the TWI master is enabled, and retained only as long as the device is in ON mode. PSELSCL and PSELSDA must only be configured when the TWI is disabled.

To secure correct signal levels on the pins used by the TWI master when the system is in OFF mode, and when the TWI master is disabled, these pins must be configured in the GPIO peripheral as described in *Table 120: GPIO configuration* on page 517.

Only one peripheral can be assigned to drive a particular GPIO pin at a time, failing to do so may result in unpredictable behavior.

Table 120: GPIO configuration

TWI master signal	TWI master pin	Direction	Drive strength	Output value
SCL	As specified in PSELSCL	Input	S0D1	Not applicable
SDA	As specified in PSELSDA	Input	S0D1	Not applicable

49.3 Shared resources

The TWI shares registers and other resources with other peripherals that have the same ID as the TWI.

Therefore, you must disable all peripherals that have the same ID as the TWI before the TWI can be configured and used. Disabling a peripheral that has the same ID as the TWI will not reset any of the registers that are shared with the TWI. It is therefore important to configure all relevant TWI registers explicitly to secure that it operates correctly.

The Instantiation table in *Instantiation* on page 21 shows which peripherals have the same ID as the TWI.

49.4 Master write sequence

A TWI master write sequence is started by triggering the STARTTX task. After the STARTTX task has been triggered, the TWI master will generate a start condition on the TWI bus, followed by clocking out the address and the READ/WRITE bit set to 0 (WRITE=0, READ=1).

The address must match the address of the slave device that the master wants to write to. The READ/WRITE bit is followed by an ACK/NACK bit (ACK=0 or NACK=1) generated by the slave.

After receiving the ACK bit, the TWI master will clock out the data bytes that are written to the TXD register. Each byte clocked out from the master will be followed by an ACK/NACK bit clocked in from the slave. A TXDSENT event will be generated each time the TWI master has clocked out a TXD byte, and the associated ACK/NACK bit has been clocked in from the slave.

The TWI master transmitter is single buffered, and a second byte can only be written to the TXD register after the previous byte has been clocked out and the ACK/NACK bit clocked in, that is, after the TXDSENT event has been generated.

If the CPU is prevented from writing to TXD when the TWI master is ready to clock out a byte, the TWI master will stretch the clock until the CPU has written a byte to the TXD register.

A typical TWI master write sequence is illustrated in *Figure 155: The TWI master writing data to a slave* on page 518. Occurrence 3 in the figure illustrates delayed processing of the TXDSENT event associated with TXD byte 1. In this scenario the TWI master will stretch the clock to prevent writing erroneous data to the slave.

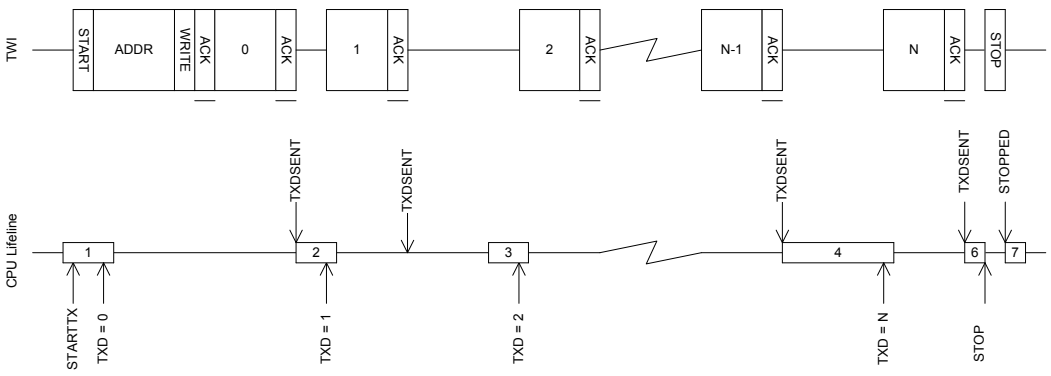

Figure 155: The TWI master writing data to a slave

The TWI master write sequence is stopped when the STOP task is triggered whereupon the TWI master will generate a stop condition on the TWI bus.

49.5 Master read sequence

A TWI master read sequence is started by triggering the STARTRX task. After the STARTRX task has been triggered the TWI master will generate a start condition on the TWI bus, followed by clocking out the address and the READ/WRITE bit set to 1 (WRITE = 0, READ = 1).

The address must match the address of the slave device that the master wants to read from. The READ/WRITE bit is followed by an ACK/NACK bit (ACK=0 or NACK = 1) generated by the slave.

After having sent the ACK bit the TWI slave will send data to the master using the clock generated by the master.

The TWI master will generate a RXDRDY event every time a new byte is received in the RXD register.

After receiving a byte, the TWI master will delay sending the ACK/NACK bit by stretching the clock until the CPU has extracted the received byte, that is, by reading the RXD register.

The TWI master read sequence is stopped by triggering the STOP task. This task must be triggered before the last byte is extracted from RXD to ensure that the TWI master sends a NACK back to the slave before generating the stop condition.

A typical TWI master read sequence is illustrated in *Figure 156: The TWI master reading data from a slave* on page 519. Occurrence 3 in this figure illustrates delayed processing of the RXDRDY event associated with RXD byte B. In this scenario the TWI master will stretch the clock to prevent the slave from overwriting the contents of the RXD register.

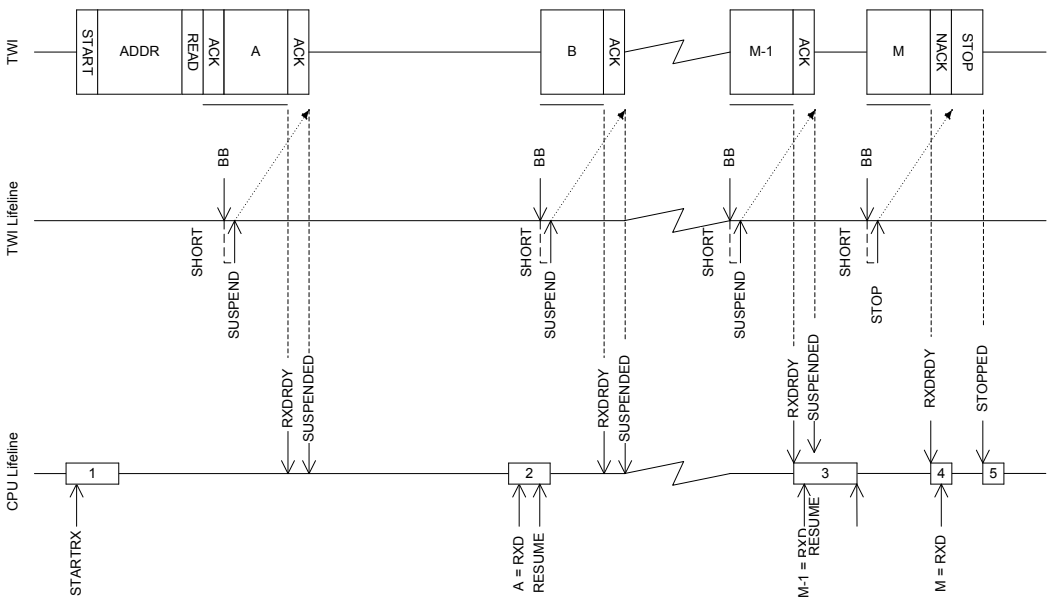

Figure 156: The TWI master reading data from a slave

49.6 Master repeated start sequence

A typical repeated start sequence is one in which the TWI master writes one byte to the slave followed by reading M bytes from the slave. Any combination and number of transmit and receive sequences can be combined in this fashion. Only one shortcut to STOP can be enabled at any given time.

The figure below illustrates a repeated start sequence where the TWI master writes one byte, followed by reading M bytes from the slave without performing a stop in-between.

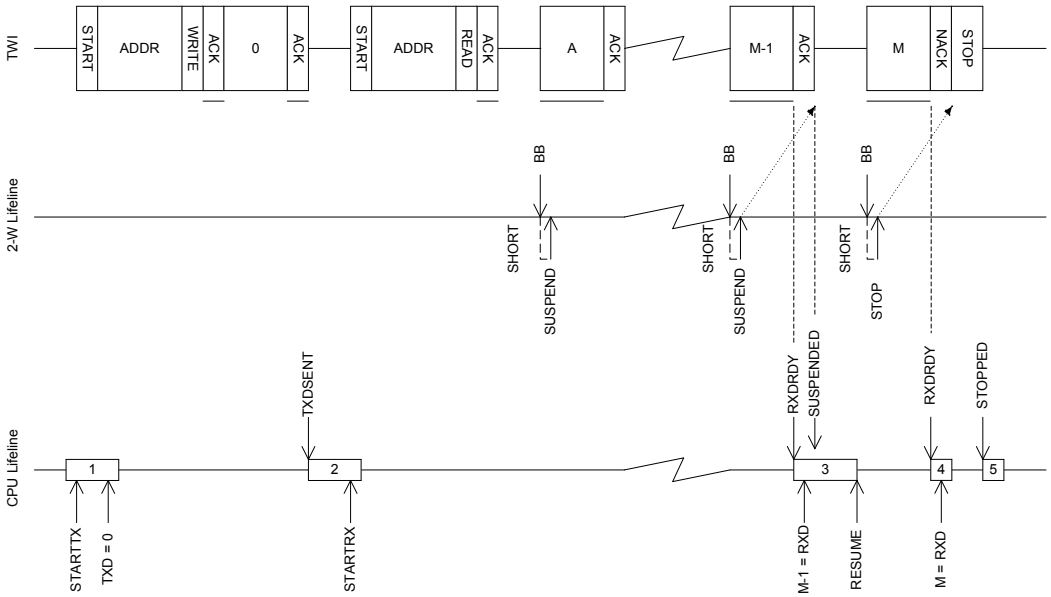

Figure 157: A repeated start sequence, where the TWI master writes one byte, followed by reading M bytes from the slave without performing a stop in-between

To generate a repeated start after a read sequence, a second start task must be triggered instead of the STOP task, that is, STARTRX or STARTTX. This start task must be triggered before the last byte is extracted from RXD to ensure that the TWI master sends a NACK back to the slave before generating the repeated start condition.

49.7 Low power

When putting the system in low power and the peripheral is not needed, lowest possible power consumption is achieved by stopping, and then disabling the peripheral.

The STOP task may not be always needed (the peripheral might already be stopped), but if it is sent, software shall wait until the STOPPED event was received as a response before disabling the peripheral through the ENABLE register.

49.8 Registers

Table 121: Instances

Base address	Peripheral	Instance	Description	Configuration
0x40003000	TWI	TWI0	Two-wire interface master 0	Deprecated
0x40004000	TWI	TWI1	Two-wire interface master 1	Deprecated

Table 122: Register Overview

Register	Offset	Description
TASKS_STARTRX	0x000	Start TWI receive sequence
TASKS_STARTTX	0x008	Start TWI transmit sequence
TASKS_STOP	0x014	Stop TWI transaction
TASKS_SUSPEND	0x01C	Suspend TWI transaction
TASKS_RESUME	0x020	Resume TWI transaction
EVENTS_STOPPED	0x104	TWI stopped
EVENTS_RXDREADY	0x108	TWI RXD byte received
EVENTS_TXDSENT	0x11C	TWI TXD byte sent
EVENTS_ERROR	0x124	TWI error
EVENTS_BB	0x138	TWI byte boundary, generated before each byte that is sent or received
EVENTS_SUSPENDED	0x148	TWI entered the suspended state
SHORTS	0x200	Shortcut register
INTENSET	0x304	Enable interrupt
INTENCLR	0x308	Disable interrupt
ERRORSRC	0x4C4	Error source
ENABLE	0x500	Enable TWI
PSELSCL	0x508	Pin select for SCL
PSELSDA	0x50C	Pin select for SDA
RXD	0x518	RXD register
TXD	0x51C	TXD register
FREQUENCY	0x524	TWI frequency
ADDRESS	0x588	Address used in the TWI transfer

49.8.1 SHORTS

Address offset: 0x200

Shortcut register

Bit number	31	30	29	28	27	26	25	24	23	22	21	20	19	18	17	16	15	14	13	12	11	10	9	8	7	6	5	4	3	2	1	0
Id																															B	A
Reset 0x00000000	**0**	**0**	**0**	**0**	**0**	**0**	**0**	**0**	**0**	**0**	**0**	**0**	**0**	**0**	**0**	**0**	**0**	**0**	**0**	**0**	**0**	**0**	**0**	**0**	**0**	**0**	**0**	**0**	**0**	**0**	**0**	**0**

Id	RW	Field	Value Id	Value	Description
A	RW	BB_SUSPEND			Shortcut between BB event and SUSPEND task
					See *EVENTS_BB* and *TASKS_SUSPEND*
			Disabled	0	Disable shortcut
			Enabled	1	Enable shortcut
B	RW	BB_STOP			Shortcut between BB event and STOP task

Bit number				31	30	29	28	27	26	25	24	23	22	21	20	19	18	17	16	15	14	13	12	11	10	9	8	7	6	5	4	3	2	1	0
Id																																		B	A
Reset 0x00000000				**0**	**0**	**0**	**0**	**0**	**0**	**0**	**0**	**0**	**0**	**0**	**0**	**0**	**0**	**0**	**0**	**0**	**0**	**0**	**0**	**0**	**0**	**0**	**0**	**0**	**0**	**0**	**0**	**0**	**0**	**0**	**0**
Id	**RW**	**Field**	**Value Id**	**Value**								**Description**																							
																																		See *EVENTS_BB* and *TASKS_STOP*	
			Disabled	0																														Disable shortcut	
			Enabled	1																														Enable shortcut	

49.8.2 INTENSET

Address offset: 0x304

Enable interrupt

Bit number				31	30	29	28	27	26	25	24	23	22	21	20	19	18	17	16	15	14	13	12	11	10	9	8	7	6	5	4	3	2	1	0
Id																	F				E					D		C					B	A	
Reset 0x00000000				**0**	**0**	**0**	**0**	**0**	**0**	**0**	**0**	**0**	**0**	**0**	**0**	**0**	**0**	**0**	**0**	**0**	**0**	**0**	**0**	**0**	**0**	**0**	**0**	**0**	**0**	**0**	**0**	**0**	**0**	**0**	**0**
Id	**RW**	**Field**	**Value Id**	**Value**								**Description**																							
A	RW	STOPPED																																Write '1' to Enable interrupt for STOPPED event	
																																		See *EVENTS_STOPPED*	
			Set	1																														Enable	
			Disabled	0																														Read: Disabled	
			Enabled	1																														Read: Enabled	
B	RW	RXDREADY																																Write '1' to Enable interrupt for RXDREADY event	
																																		See *EVENTS_RXDREADY*	
			Set	1																														Enable	
			Disabled	0																														Read: Disabled	
			Enabled	1																														Read: Enabled	
C	RW	TXDSENT																																Write '1' to Enable interrupt for TXDSENT event	
																																		See *EVENTS_TXDSENT*	
			Set	1																														Enable	
			Disabled	0																														Read: Disabled	
			Enabled	1																														Read: Enabled	
D	RW	ERROR																																Write '1' to Enable interrupt for ERROR event	
																																		See *EVENTS_ERROR*	
			Set	1																														Enable	
			Disabled	0																														Read: Disabled	
			Enabled	1																														Read: Enabled	
E	RW	BB																																Write '1' to Enable interrupt for BB event	
																																		See *EVENTS_BB*	
			Set	1																														Enable	
			Disabled	0																														Read: Disabled	
			Enabled	1																														Read: Enabled	
F	RW	SUSPENDED																																Write '1' to Enable interrupt for SUSPENDED event	
																																		See *EVENTS_SUSPENDED*	
			Set	1																														Enable	
			Disabled	0																														Read: Disabled	
			Enabled	1																														Read: Enabled	

49.8.3 INTENCLR

Address offset: 0x308

Disable interrupt

Bit number				31	30	29	28	27	26	25	24	23	22	21	20	19	18	17	16	15	14	13	12	11	10	9	8	7	6	5	4	3	2	1	0
Id																	F				E					D		C					B	A	
Reset 0x00000000				**0**	**0**	**0**	**0**	**0**	**0**	**0**	**0**	**0**	**0**	**0**	**0**	**0**	**0**	**0**	**0**	**0**	**0**	**0**	**0**	**0**	**0**	**0**	**0**	**0**	**0**	**0**	**0**	**0**	**0**	**0**	**0**
Id	**RW**	**Field**	**Value Id**	**Value**																															
A	RW	STOPPED																																	
			Clear	1																															
			Disabled	0																															
			Enabled	1																															
B	RW	RXDREADY																																	
			Clear	1																															
			Disabled	0																															
			Enabled	1																															
C	RW	TXDSENT																																	
			Clear	1																															
			Disabled	0																															
			Enabled	1																															
D	RW	ERROR																																	
			Clear	1																															
			Disabled	0																															
			Enabled	1																															
E	RW	BB																																	
			Clear	1																															
			Disabled	0																															
			Enabled	1																															
F	RW	SUSPENDED																																	
			Clear	1																															
			Disabled	0																															
			Enabled	1																															

49.8.4 ERRORSRC

Address offset: 0x4C4

Error source

Bit number				31	30	29	28	27	26	25	24	23	22	21	20	19	18	17	16	15	14	13	12	11	10	9	8	7	6	5	4	3	2	1	0
Id																																	C	B	A
Reset 0x00000000				**0**	**0**	**0**	**0**	**0**	**0**	**0**	**0**	**0**	**0**	**0**	**0**	**0**	**0**	**0**	**0**	**0**	**0**	**0**	**0**	**0**	**0**	**0**	**0**	**0**	**0**	**0**	**0**	**0**	**0**	**0**	**0**
Id	**RW**	**Field**	**Value Id**	**Value**																															
A	RW	OVERRUN																																	
			NotPresent	0																															
			Present	1																															
B	RW	ANACK																																	
			NotPresent	0																															
			Present	1																															
C	RW	DNACK																																	
			NotPresent	0																															
			Present	1																															

49.8.5 ENABLE

Address offset: 0x500

Enable TWI

Bit number				31	30	29	28	27	26	25	24	23	22	21	20	19	18	17	16	15	14	13	12	11	10	9	8	7	6	5	4	3	2	1	0
Id																																A	A	A	A
Reset 0x00000000				**0**	**0**	**0**	**0**	**0**	**0**	**0**	**0**	**0**	**0**	**0**	**0**	**0**	**0**	**0**	**0**	**0**	**0**	**0**	**0**	**0**	**0**	**0**	**0**	**0**	**0**	**0**	**0**	**0**	**0**	**0**	**0**
Id	**RW**	**Field**	**Value Id**	**Value**																															
A	RW	ENABLE																																	
			Disabled	0																															
			Enabled	5																															

49.8.6 PSELSCL

Address offset: 0x508

Pin select for SCL

Bit number				31	30	29	28	27	26	25	24	23	22	21	20	19	18	17	16	15	14	13	12	11	10	9	8	7	6	5	4	3	2	1	0
Id				A	A	A	A	A	A	A	A	A	A	A	A	A	A	A	A	A	A	A	A	A	A	A	A	A	A	A	A	A	A	A	A
Reset 0xFFFFFFFF				**1**	**1**	**1**	**1**	**1**	**1**	**1**	**1**	**1**	**1**	**1**	**1**	**1**	**1**	**1**	**1**	**1**	**1**	**1**	**1**	**1**	**1**	**1**	**1**	**1**	**1**	**1**	**1**	**1**	**1**	**1**	**1**
Id	**RW**	**Field**	**Value Id**	**Value**																															
A	RW	PSELSCL		[0..31]																															
			Disconnected	0xFFFFFFFF																															

49.8.7 PSELSDA

Address offset: 0x50C

Pin select for SDA

Bit number				31	30	29	28	27	26	25	24	23	22	21	20	19	18	17	16	15	14	13	12	11	10	9	8	7	6	5	4	3	2	1	0
Id				A	A	A	A	A	A	A	A	A	A	A	A	A	A	A	A	A	A	A	A	A	A	A	A	A	A	A	A	A	A	A	A
Reset 0xFFFFFFFF				**1**	**1**	**1**	**1**	**1**	**1**	**1**	**1**	**1**	**1**	**1**	**1**	**1**	**1**	**1**	**1**	**1**	**1**	**1**	**1**	**1**	**1**	**1**	**1**	**1**	**1**	**1**	**1**	**1**	**1**	**1**	**1**
Id	**RW**	**Field**	**Value Id**	**Value**																															
A	RW	PSELSDA		[0..31]																															
			Disconnected	0xFFFFFFFF																															

49.8.8 RXD

Address offset: 0x518

RXD register

Bit number				31	30	29	28	27	26	25	24	23	22	21	20	19	18	17	16	15	14	13	12	11	10	9	8	7	6	5	4	3	2	1	0
Id																												A	A	A	A	A	A	A	A
Reset 0x00000000				**0**	**0**	**0**	**0**	**0**	**0**	**0**	**0**	**0**	**0**	**0**	**0**	**0**	**0**	**0**	**0**	**0**	**0**	**0**	**0**	**0**	**0**	**0**	**0**	**0**	**0**	**0**	**0**	**0**	**0**	**0**	**0**
Id	**RW**	**Field**	**Value Id**	**Value**																															
A	R	RXD																																	

49.8.9 TXD

Address offset: 0x51C

TXD register

Bit number				31	30	29	28	27	26	25	24	23	22	21	20	19	18	17	16	15	14	13	12	11	10	9	8	7	6	5	4	3	2	1	0
Id																												A	A	A	A	A	A	A	A
Reset 0x00000000				**0**	**0**	**0**	**0**	**0**	**0**	**0**	**0**	**0**	**0**	**0**	**0**	**0**	**0**	**0**	**0**	**0**	**0**	**0**	**0**	**0**	**0**	**0**	**0**	**0**	**0**	**0**	**0**	**0**	**0**	**0**	**0**
Id	**RW**	**Field**	**Value Id**	**Value**																															
A	RW	TXD																																	

49.8.10 FREQUENCY

Address offset: 0x524

TWI frequency

Bit number				31	30	29	28	27	26	25	24	23	22	21	20	19	18	17	16	15	14	13	12	11	10	9	8	7	6	5	4	3	2	1	0
Id				A	A	A	A	A	A	A	A	A	A	A	A	A	A	A	A	A	A	A	A	A	A	A	A	A	A	A	A	A	A	A	A
Reset 0x04000000				**0**	**0**	**0**	**0**	**0**	**1**	**0**	**0**	**0**	**0**	**0**	**0**	**0**	**0**	**0**	**0**	**0**	**0**	**0**	**0**	**0**	**0**	**0**	**0**	**0**	**0**	**0**	**0**	**0**	**0**	**0**	**0**
Id	**RW**	**Field**	**Value Id**	**Value**								**Description**																							
A	RW	FREQUENCY										TWI master clock frequency																							
			K100	0x01980000								100 kbps																							
			K250	0x04000000								250 kbps																							
			K400	0x06680000								400 kbps (actual rate 410.256 kbps)																							

49.8.11 ADDRESS

Address offset: 0x588

Address used in the TWI transfer

Bit number				31	30	29	28	27	26	25	24	23	22	21	20	19	18	17	16	15	14	13	12	11	10	9	8	7	6	5	4	3	2	1	0
Id																													A	A	A	A	A	A	A
Reset 0x00000000				**0**	**0**	**0**	**0**	**0**	**0**	**0**	**0**	**0**	**0**	**0**	**0**	**0**	**0**	**0**	**0**	**0**	**0**	**0**	**0**	**0**	**0**	**0**	**0**	**0**	**0**	**0**	**0**	**0**	**0**	**0**	**0**
Id	**RW**	**Field**	**Value Id**	**Value**								**Description**																							
A	RW	ADDRESS										Address used in the TWI transfer																							

49.9 Electrical Specification

49.9.1 TWI interface electrical specifications

Symbol	Description	Min.	Typ.	Max.	Units
f_{TWI}	Bit rates for TWI[41]	100		400	kbps
$I_{TWI,100kbps}$	Run current for TWI, 100 kbps		50		µA
$I_{TWI,400kbps}$	Run current for TWI, 400 kbps		50		µA
$t_{TWI,START,LP}$	Time from STARTRX/STARTTX task to transmission started, Low power mode		$t_{TWI,START,C}$ + t_{START_HFIN}		µs
$t_{TWI,START,CL}$	Time from STARTRX/STARTTX task to transmission started, Constant latency mode		1.5		µs

49.9.2 Two Wire Interface (TWI) timing specifications

Symbol	Description	Min.	Typ.	Max.	Units
$f_{TWI,SCL,100kbps}$	SCL clock frequency, 100 kbps		100		kHz
$f_{TWI,SCL,250kbps}$	SCL clock frequency, 250 kbps		250		kHz
$f_{TWI,SCL,400kbps}$	SCL clock frequency, 400 kbps		400		kHz
t_{TWI,SU_DAT}	Data setup time before positive edge on SCL – all modes	300			ns
t_{TWI,HD_DAT}	Data hold time after negative edge on SCL – all modes	500			ns
$t_{TWI,HD\_STA,100kbps}$	TWI master hold time for START and repeated START condition, 100 kbps	10000			ns
$t_{TWI,HD\_STA,250kbps}$	TWI master hold time for START and repeated START condition, 250kbps	4000			ns
$t_{TWI,HD\_STA,400kbps}$	TWI master hold time for START and repeated START condition, 400 kbps	2500			ns
$t_{TWI,SU\_STO,100kbps}$	TWI master setup time from SCL high to STOP condition, 100 kbps	5000			ns

41 Higher bit rates or stronger pull-ups may require GPIOs to be set as High Drive, see GPIO chapter for more details.

Symbol	Description	Min.	Typ.	Max.	Units
$t_{TWI,SU\_STO,250kbps}$	TWI master setup time from SCL high to STOP condition, 250 kbps	2000			ns
$t_{TWI,SU\_STO,400kbps}$	TWI master setup time from SCL high to STOP condition, 400 kbps	1250			ns
$t_{TWI,BUF,100kbps}$	TWI master bus free time between STOP and START conditions, 100 kbps	5800			ns
$t_{TWI,BUF,250kbps}$	TWI master bus free time between STOP and START conditions, 250 kbps	2700			ns
$t_{TWI,BUF,400kbps}$	TWI master bus free time between STOP and START conditions, 400 kbps	2100			ns

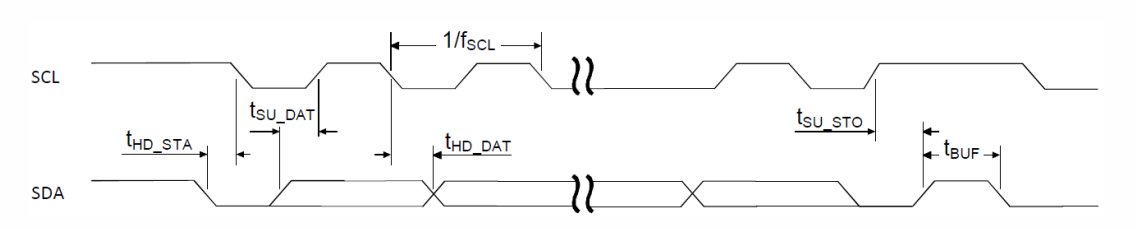

Figure 158: TWI timing diagram, 1 byte transaction

50 UART — Universal asynchronous receiver/ transmitter

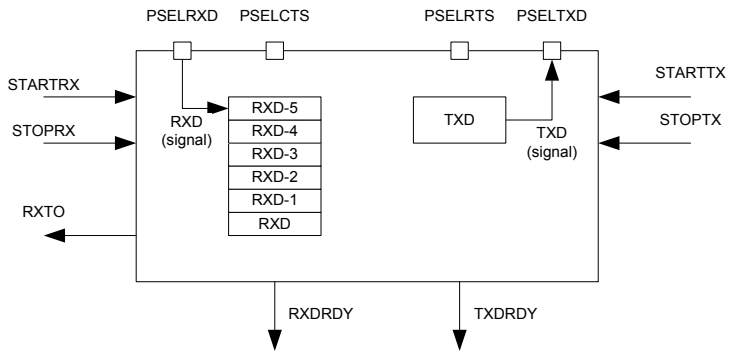

Figure 159: UART configuration

50.1 Functional description

Listed here are the main features of UART.

The UART implements support for the following features:

- Full-duplex operation
- Automatic flow control
- Parity checking and generation for the 9th data bit

As illustrated in *Figure 159: UART configuration* on page 526, the UART uses the TXD and RXD registers directly to transmit and receive data. The UART uses one stop bit.

50.2 Pin configuration

The different signals RXD, CTS (Clear To Send, active low), RTS (Request To Send, active low), and TXD associated with the UART are mapped to physical pins according to the configuration specified in the PSELRXD, PSELCTS, PSELRTS, and PSELTXD registers respectively.

If a value of 0xFFFFFFFF is specified in any of these registers, the associated UART signal will not be connected to any physical pin. The PSELRXD, PSELCTS, PSELRTS, and PSELTXD registers and their configurations are only used as long as the UART is enabled, and retained only for the duration the device is in ON mode. PSELRXD, PSELCTS, PSELRTS and PSELTXD must only be configured when the UART is disabled.

To secure correct signal levels on the pins by the UART when the system is in OFF mode, the pins must be configured in the GPIO peripheral as described in *Pin configuration* on page 526.

Only one peripheral can be assigned to drive a particular GPIO pin at a time. Failing to do so may result in unpredictable behavior.

Table 123: GPIO configuration

UART pin	Direction	Output value
RXD	Input	Not applicable
CTS	Input	Not applicable
RTS	Output	1
TXD	Output	1

50.3 Shared resources

The UART shares registers and other resources with other peripherals that have the same ID as the UART.

Therefore, you must disable all peripherals that have the same ID as the UART before the UART can be configured and used. Disabling a peripheral that has the same ID as the UART will not reset any of the registers that are shared with the UART. It is therefore important to configure all relevant UART registers explicitly to ensure that it operates correctly.

See the Instantiation table in *Instantiation* on page 21 for details on peripherals and their IDs.

50.4 Transmission

A UART transmission sequence is started by triggering the STARTTX task.

Bytes are transmitted by writing to the TXD register. When a byte has been successfully transmitted the UART will generate a TXDRDY event after which a new byte can be written to the TXD register. A UART transmission sequence is stopped immediately by triggering the STOPTX task.

If flow control is enabled a transmission will be automatically suspended when CTS is deactivated and resumed when CTS is activated again, as illustrated in *Figure 160: UART transmission* on page 527.
A byte that is in transmission when CTS is deactivated will be fully transmitted before the transmission is suspended. For more information, see *Suspending the UART* on page 528.

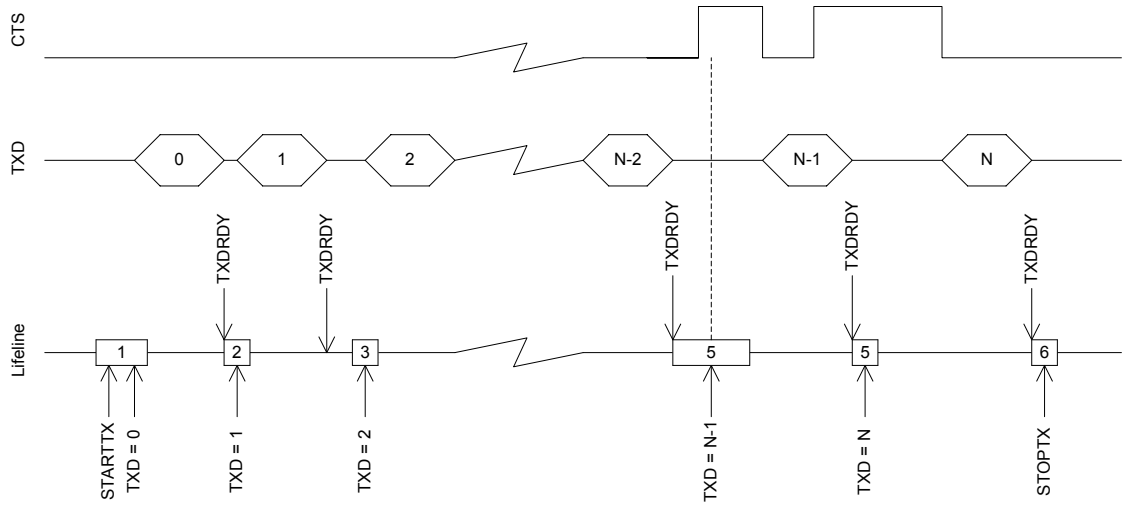

Figure 160: UART transmission

50.5 Reception

A UART reception sequence is started by triggering the STARTRX task.

The UART receiver chain implements a FIFO capable of storing six incoming RXD bytes before data is overwritten. Bytes are extracted from this FIFO by reading the RXD register. When a byte is extracted from the FIFO a new byte pending in the FIFO will be moved to the RXD register. The UART will generate an RXDRDY event every time a new byte is moved to the RXD register.

When flow control is enabled, the UART will deactivate the RTS signal when there is only space for four more bytes in the receiver FIFO. The counterpart transmitter is therefore able to send up to four bytes after the RTS signal is deactivated before data is being overwritten. To prevent overwriting data in the FIFO, the counterpart UART transmitter must therefore make sure to stop transmitting data within four bytes after the RTS line is deactivated.

The RTS signal will first be activated again when the FIFO has been emptied, that is, when all bytes in the FIFO have been read by the CPU, see *Figure 161: UART reception* on page 528.

The RTS signal will also be deactivated when the receiver is stopped through the STOPRX task as illustrated in *Figure 161: UART reception* on page 528. The UART is able to receive four to five additional bytes if they are sent in succession immediately after the RTS signal has been deactivated. This is possible because the UART is, even after the STOPRX task is triggered, able to receive bytes for an extended period of time dependent on the configured baud rate. The UART will generate a receiver timeout event (RXTO) when this period has elapsed.

To prevent loss of incoming data the RXD register must only be read one time following every RXDRDY event.

To secure that the CPU can detect all incoming RXDRDY events through the RXDRDY event register, the RXDRDY event register must be cleared before the RXD register is read. The reason for this is that the UART is allowed to write a new byte to the RXD register, and therefore can also generate a new event, immediately after the RXD register is read (emptied) by the CPU.

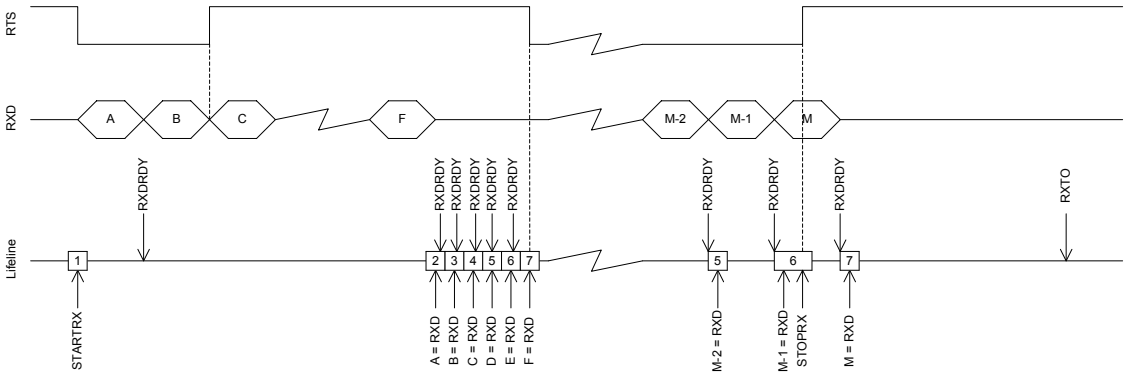

Figure 161: UART reception

As indicated in occurrence 2 in the figure, the RXDRDY event associated with byte B is generated first after byte A has been extracted from RXD.

50.6 Suspending the UART

The UART can be suspended by triggering the SUSPEND task.

SUSPEND will affect both the UART receiver and the UART transmitter, i.e. the transmitter will stop transmitting and the receiver will stop receiving. UART transmission and reception can be resumed, after being suspended, by triggering STARTTX and STARTRX respectively.

Following a SUSPEND task, an ongoing TXD byte transmission will be completed before the UART is suspended.

When the SUSPEND task is triggered, the UART receiver will behave in the same way as it does when the STOPRX task is triggered.

50.7 Error conditions

An ERROR event, in the form of a framing error, will be generated if a valid stop bit is not detected in a frame. Another ERROR event, in the form of a break condition, will be generated if the RXD line is held active low for longer than the length of a data frame. Effectively, a framing error is always generated before a break condition occurs.

50.8 Using the UART without flow control

If flow control is not enabled, the interface will behave as if the CTS and RTS lines are kept active all the time.

50.9 Parity configuration

When parity is enabled, the parity will be generated automatically from the even parity of TXD and RXD for transmission and reception respectively.

50.10 Registers

Table 124: Instances

Base address	Peripheral	Instance	Description	Configuration	
0x40002000	UART	UART0	Universal Asynchronous Receiver/ Transmitter		Deprecated

Table 125: Register Overview

Register	Offset	Description
TASKS_STARTRX	0x000	Start UART receiver
TASKS_STOPRX	0x004	Stop UART receiver
TASKS_STARTTX	0x008	Start UART transmitter
TASKS_STOPTX	0x00C	Stop UART transmitter
TASKS_SUSPEND	0x01C	Suspend UART
EVENTS_CTS	0x100	CTS is activated (set low). Clear To Send.
EVENTS_NCTS	0x104	CTS is deactivated (set high). Not Clear To Send.
EVENTS_RXDRDY	0x108	Data received in RXD
EVENTS_TXDRDY	0x11C	Data sent from TXD
EVENTS_ERROR	0x124	Error detected
EVENTS_RXTO	0x144	Receiver timeout
SHORTS	0x200	Shortcut register
INTENSET	0x304	Enable interrupt
INTENCLR	0x308	Disable interrupt
ERRORSRC	0x480	Error source
ENABLE	0x500	Enable UART
PSELRTS	0x508	Pin select for RTS
PSELTXD	0x50C	Pin select for TXD
PSELCTS	0x510	Pin select for CTS
PSELRXD	0x514	Pin select for RXD
RXD	0x518	RXD register
TXD	0x51C	TXD register
BAUDRATE	0x524	Baud rate
CONFIG	0x56C	Configuration of parity and hardware flow control

50.10.1 SHORTS

Address offset: 0x200

Shortcut register

Bit number	31	30	29	28	27	26	25	24	23	22	21	20	19	18	17	16	15	14	13	12	11	10	9	8	7	6	5	4	3	2	1	0
Id																												B	A			
Reset 0x00000000	**0**	**0**	**0**	**0**	**0**	**0**	**0**	**0**	**0**	**0**	**0**	**0**	**0**	**0**	**0**	**0**	**0**	**0**	**0**	**0**	**0**	**0**	**0**	**0**	**0**	**0**	**0**	**0**	**0**	**0**	**0**	**0**

Id	RW	Field	Value Id	Value	Description
A	RW	CTS_STARTRX			Shortcut between CTS event and STARTRX task

Bit number				31	30	29	28	27	26	25	24	23	22	21	20	19	18	17	16	15	14	13	12	11	10	9	8	7	6	5	4	3	2	1	0
Id																															B	A			
Reset 0x00000000				**0**	**0**	**0**	**0**	**0**	**0**	**0**	**0**	**0**	**0**	**0**	**0**	**0**	**0**	**0**	**0**	**0**	**0**	**0**	**0**	**0**	**0**	**0**	**0**	**0**	**0**	**0**	**0**	**0**	**0**	**0**	**0**
Id	**RW**	**Field**	**Value Id**	**Value**								**Description**																							
												See *EVENTS_CTS* and *TASKS_STARTRX*																							
			Disabled	0								Disable shortcut																							
			Enabled	1								Enable shortcut																							
B	RW	NCTS_STOPRX										Shortcut between NCTS event and STOPRX task																							
												See *EVENTS_NCTS* and *TASKS_STOPRX*																							
			Disabled	0								Disable shortcut																							
			Enabled	1								Enable shortcut																							

50.10.2 INTENSET

Address offset: 0x304

Enable interrupt

Bit number				31	30	29	28	27	26	25	24	23	22	21	20	19	18	17	16	15	14	13	12	11	10	9	8	7	6	5	4	3	2	1	0
Id																		F								E		D					C	B	A
Reset 0x00000000				**0**	**0**	**0**	**0**	**0**	**0**	**0**	**0**	**0**	**0**	**0**	**0**	**0**	**0**	**0**	**0**	**0**	**0**	**0**	**0**	**0**	**0**	**0**	**0**	**0**	**0**	**0**	**0**	**0**	**0**	**0**	**0**
Id	**RW**	**Field**	**Value Id**	**Value**								**Description**																							
A	RW	CTS										Write '1' to Enable interrupt for CTS event																							
												See *EVENTS_CTS*																							
			Set	1								Enable																							
			Disabled	0								Read: Disabled																							
			Enabled	1								Read: Enabled																							
B	RW	NCTS										Write '1' to Enable interrupt for NCTS event																							
												See *EVENTS_NCTS*																							
			Set	1								Enable																							
			Disabled	0								Read: Disabled																							
			Enabled	1								Read: Enabled																							
C	RW	RXDRDY										Write '1' to Enable interrupt for RXDRDY event																							
												See *EVENTS_RXDRDY*																							
			Set	1								Enable																							
			Disabled	0								Read: Disabled																							
			Enabled	1								Read: Enabled																							
D	RW	TXDRDY										Write '1' to Enable interrupt for TXDRDY event																							
												See *EVENTS_TXDRDY*																							
			Set	1								Enable																							
			Disabled	0								Read: Disabled																							
			Enabled	1								Read: Enabled																							
E	RW	ERROR										Write '1' to Enable interrupt for ERROR event																							
												See *EVENTS_ERROR*																							
			Set	1								Enable																							
			Disabled	0								Read: Disabled																							
			Enabled	1								Read: Enabled																							
F	RW	RXTO										Write '1' to Enable interrupt for RXTO event																							
												See *EVENTS_RXTO*																							
			Set	1								Enable																							
			Disabled	0								Read: Disabled																							
			Enabled	1								Read: Enabled																							

50.10.3 INTENCLR

Address offset: 0x308

Disable interrupt

Bit number				31	30	29	28	27	26	25	24	23	22	21	20	19	18	17	16	15	14	13	12	11	10	9	8	7	6	5	4	3	2	1	0
Id																		F								E		D					C	B	A
Reset 0x00000000				**0**	**0**	**0**	**0**	**0**	**0**	**0**	**0**	**0**	**0**	**0**	**0**	**0**	**0**	**0**	**0**	**0**	**0**	**0**	**0**	**0**	**0**	**0**	**0**	**0**	**0**	**0**	**0**	**0**	**0**	**0**	**0**
Id	**RW**	**Field**	**Value Id**	**Value**								**Description**																							
A	RW	CTS										Write '1' to Disable interrupt for CTS event See *EVENTS_CTS*																							
			Clear	1								Disable																							
			Disabled	0								Read: Disabled																							
			Enabled	1								Read: Enabled																							
B	RW	NCTS										Write '1' to Disable interrupt for NCTS event See *EVENTS_NCTS*																							
			Clear	1								Disable																							
			Disabled	0								Read: Disabled																							
			Enabled	1								Read: Enabled																							
C	RW	RXDRDY										Write '1' to Disable interrupt for RXDRDY event See *EVENTS_RXDRDY*																							
			Clear	1								Disable																							
			Disabled	0								Read: Disabled																							
			Enabled	1								Read: Enabled																							
D	RW	TXDRDY										Write '1' to Disable interrupt for TXDRDY event See *EVENTS_TXDRDY*																							
			Clear	1								Disable																							
			Disabled	0								Read: Disabled																							
			Enabled	1								Read: Enabled																							
E	RW	ERROR										Write '1' to Disable interrupt for ERROR event See *EVENTS_ERROR*																							
			Clear	1								Disable																							
			Disabled	0								Read: Disabled																							
			Enabled	1								Read: Enabled																							
F	RW	RXTO										Write '1' to Disable interrupt for RXTO event See *EVENTS_RXTO*																							
			Clear	1								Disable																							
			Disabled	0								Read: Disabled																							
			Enabled	1								Read: Enabled																							

50.10.4 ERRORSRC

Address offset: 0x480

Error source

Bit number				31	30	29	28	27	26	25	24	23	22	21	20	19	18	17	16	15	14	13	12	11	10	9	8	7	6	5	4	3	2	1	0
Id																																D	C	B	A
Reset 0x00000000				**0**	**0**	**0**	**0**	**0**	**0**	**0**	**0**	**0**	**0**	**0**	**0**	**0**	**0**	**0**	**0**	**0**	**0**	**0**	**0**	**0**	**0**	**0**	**0**	**0**	**0**	**0**	**0**	**0**	**0**	**0**	**0**
Id	**RW**	**Field**	**Value Id**	**Value**								**Description**																							
A	RW	OVERRUN										Overrun error A start bit is received while the previous data still lies in RXD. (Previous data is lost.)																							
			NotPresent	0								Read: error not present																							
			Present	1								Read: error present																							
B	RW	PARITY										Parity error A character with bad parity is received, if HW parity check is enabled.																							
			NotPresent	0								Read: error not present																							
			Present	1								Read: error present																							
C	RW	FRAMING										Framing error occurred																							

Bit number				31	30	29	28	27	26	25	24	23	22	21	20	19	18	17	16	15	14	13	12	11	10	9	8	7	6	5	4	3	2	1	0
Id																																D	C	B	A
Reset 0x00000000				**0**	**0**	**0**	**0**	**0**	**0**	**0**	**0**	**0**	**0**	**0**	**0**	**0**	**0**	**0**	**0**	**0**	**0**	**0**	**0**	**0**	**0**	**0**	**0**	**0**	**0**	**0**	**0**	**0**	**0**	**0**	**0**
Id	**RW**	**Field**	**Value Id**	**Value**																															

Id	RW	Field	Value Id	Value	Description
					A valid stop bit is not detected on the serial data input after all bits in a character have been received.
			NotPresent	0	Read: error not present
			Present	1	Read: error present
D	RW	BREAK			Break condition The serial data input is '0' for longer than the length of a data frame. (The data frame length is 10 bits without parity bit, and 11 bits with parity bit.).
			NotPresent	0	Read: error not present
			Present	1	Read: error present

50.10.5 ENABLE

Address offset: 0x500

Enable UART

Bit number				31	30	29	28	27	26	25	24	23	22	21	20	19	18	17	16	15	14	13	12	11	10	9	8	7	6	5	4	3	2	1	0
Id																																A	A	A	A
Reset 0x00000000				**0**	**0**	**0**	**0**	**0**	**0**	**0**	**0**	**0**	**0**	**0**	**0**	**0**	**0**	**0**	**0**	**0**	**0**	**0**	**0**	**0**	**0**	**0**	**0**	**0**	**0**	**0**	**0**	**0**	**0**	**0**	**0**
Id	**RW**	**Field**	**Value Id**	**Value**																															
A	RW	ENABLE																																	
			Disabled	0																															
			Enabled	4																															

50.10.6 PSELRTS

Address offset: 0x508

Pin select for RTS

Bit number				31	30	29	28	27	26	25	24	23	22	21	20	19	18	17	16	15	14	13	12	11	10	9	8	7	6	5	4	3	2	1	0
Id				A	A	A	A	A	A	A	A	A	A	A	A	A	A	A	A	A	A	A	A	A	A	A	A	A	A	A	A	A	A	A	A
Reset 0xFFFFFFFF				**1**	**1**	**1**	**1**	**1**	**1**	**1**	**1**	**1**	**1**	**1**	**1**	**1**	**1**	**1**	**1**	**1**	**1**	**1**	**1**	**1**	**1**	**1**	**1**	**1**	**1**	**1**	**1**	**1**	**1**	**1**	**1**
Id	**RW**	**Field**	**Value Id**	**Value**																															
A	RW	PSELRTS		[0..31]																															
			Disconnected	0xFFFFFFFF																															

50.10.7 PSELTXD

Address offset: 0x50C

Pin select for TXD

Bit number				31	30	29	28	27	26	25	24	23	22	21	20	19	18	17	16	15	14	13	12	11	10	9	8	7	6	5	4	3	2	1	0
Id				A	A	A	A	A	A	A	A	A	A	A	A	A	A	A	A	A	A	A	A	A	A	A	A	A	A	A	A	A	A	A	A
Reset 0xFFFFFFFF				**1**	**1**	**1**	**1**	**1**	**1**	**1**	**1**	**1**	**1**	**1**	**1**	**1**	**1**	**1**	**1**	**1**	**1**	**1**	**1**	**1**	**1**	**1**	**1**	**1**	**1**	**1**	**1**	**1**	**1**	**1**	**1**
Id	**RW**	**Field**	**Value Id**	**Value**																															
A	RW	PSELTXD		[0..31]																															
			Disconnected	0xFFFFFFFF																															

50.10.8 PSELCTS

Address offset: 0x510

Pin select for CTS

Bit number				31	30	29	28	27	26	25	24	23	22	21	20	19	18	17	16	15	14	13	12	11	10	9	8	7	6	5	4	3	2	1	0
Id				A	A	A	A	A	A	A	A	A	A	A	A	A	A	A	A	A	A	A	A	A	A	A	A	A	A	A	A	A	A	A	A
Reset 0xFFFFFFFF				**1**	**1**	**1**	**1**	**1**	**1**	**1**	**1**	**1**	**1**	**1**	**1**	**1**	**1**	**1**	**1**	**1**	**1**	**1**	**1**	**1**	**1**	**1**	**1**	**1**	**1**	**1**	**1**	**1**	**1**	**1**	**1**
Id	**RW**	**Field**	**Value Id**	**Value**								**Description**																							
A	RW	PSELCTS		[0..31]								Pin number configuration for UART CTS signal																							
			Disconnected	0xFFFFFFFF								Disconnect																							

50.10.9 PSELRXD

Address offset: 0x514

Pin select for RXD

Bit number				31	30	29	28	27	26	25	24	23	22	21	20	19	18	17	16	15	14	13	12	11	10	9	8	7	6	5	4	3	2	1	0
Id				A	A	A	A	A	A	A	A	A	A	A	A	A	A	A	A	A	A	A	A	A	A	A	A	A	A	A	A	A	A	A	A
Reset 0xFFFFFFFF				**1**	**1**	**1**	**1**	**1**	**1**	**1**	**1**	**1**	**1**	**1**	**1**	**1**	**1**	**1**	**1**	**1**	**1**	**1**	**1**	**1**	**1**	**1**	**1**	**1**	**1**	**1**	**1**	**1**	**1**	**1**	**1**
Id	**RW**	**Field**	**Value Id**	**Value**								**Description**																							
A	RW	PSELRXD		[0..31]								Pin number configuration for UART RXD signal																							
			Disconnected	0xFFFFFFFF								Disconnect																							

50.10.10 RXD

Address offset: 0x518

RXD register

Bit number				31	30	29	28	27	26	25	24	23	22	21	20	19	18	17	16	15	14	13	12	11	10	9	8	7	6	5	4	3	2	1	0
Id																												A	A	A	A	A	A	A	A
Reset 0x00000000				**0**	**0**	**0**	**0**	**0**	**0**	**0**	**0**	**0**	**0**	**0**	**0**	**0**	**0**	**0**	**0**	**0**	**0**	**0**	**0**	**0**	**0**	**0**	**0**	**0**	**0**	**0**	**0**	**0**	**0**	**0**	**0**
Id	**RW**	**Field**	**Value Id**	**Value**								**Description**																							
A	R	RXD										RX data received in previous transfers, double buffered																							

50.10.11 TXD

Address offset: 0x51C

TXD register

Bit number				31	30	29	28	27	26	25	24	23	22	21	20	19	18	17	16	15	14	13	12	11	10	9	8	7	6	5	4	3	2	1	0
Id																												A	A	A	A	A	A	A	A
Reset 0x00000000				**0**	**0**	**0**	**0**	**0**	**0**	**0**	**0**	**0**	**0**	**0**	**0**	**0**	**0**	**0**	**0**	**0**	**0**	**0**	**0**	**0**	**0**	**0**	**0**	**0**	**0**	**0**	**0**	**0**	**0**	**0**	**0**
Id	**RW**	**Field**	**Value Id**	**Value**								**Description**																							
A	W	TXD										TX data to be transferred																							

50.10.12 BAUDRATE

Address offset: 0x524

Baud rate

Bit number				31	30	29	28	27	26	25	24	23	22	21	20	19	18	17	16	15	14	13	12	11	10	9	8	7	6	5	4	3	2	1	0
Id				A	A	A	A	A	A	A	A	A	A	A	A	A	A	A	A	A	A	A	A	A	A	A	A	A	A	A	A	A	A	A	A
Reset 0x04000000				**0**	**0**	**0**	**0**	**0**	**1**	**0**	**0**	**0**	**0**	**0**	**0**	**0**	**0**	**0**	**0**	**0**	**0**	**0**	**0**	**0**	**0**	**0**	**0**	**0**	**0**	**0**	**0**	**0**	**0**	**0**	**0**
Id	**RW**	**Field**	**Value Id**	**Value**								**Description**																							
A	RW	BAUDRATE										Baud-rate																							
			Baud1200	0x0004F000								1200 baud (actual rate: 1205)																							
			Baud2400	0x0009D000								2400 baud (actual rate: 2396)																							
			Baud4800	0x0013B000								4800 baud (actual rate: 4808)																							
			Baud9600	0x00275000								9600 baud (actual rate: 9598)																							
			Baud14400	0x003B0000								14400 baud (actual rate: 14414)																							
			Baud19200	0x004EA000								19200 baud (actual rate: 19208)																							
			Baud28800	0x0075F000								28800 baud (actual rate: 28829)																							
			Baud38400	0x009D5000								38400 baud (actual rate: 38462)																							
			Baud57600	0x00EBF000								57600 baud (actual rate: 57762)																							

Bit number				31	30	29	28	27	26	25	24	23	22	21	20	19	18	17	16	15	14	13	12	11	10	9	8	7	6	5	4	3	2	1	0
Id				A	A	A	A	A	A	A	A	A	A	A	A	A	A	A	A	A	A	A	A	A	A	A	A	A	A	A	A	A	A	A	A
Reset 0x04000000				**0**	**0**	**0**	**0**	**0**	**1**	**0**	**0**	**0**	**0**	**0**	**0**	**0**	**0**	**0**	**0**	**0**	**0**	**0**	**0**	**0**	**0**	**0**	**0**	**0**	**0**	**0**	**0**	**0**	**0**	**0**	**0**
Id	**RW**	**Field**	**Value Id**	**Value**																															
			Baud76800	0x013A9000																															
			Baud115200	0x01D7E000																															
			Baud230400	0x03AFB000																															
			Baud250000	0x04000000																															
			Baud460800	0x075F7000																															
			Baud921600	0x0EBED000																															
			Baud1M	0x10000000																															

50.10.13 CONFIG

Address offset: 0x56C

Configuration of parity and hardware flow control

Bit number				31	30	29	28	27	26	25	24	23	22	21	20	19	18	17	16	15	14	13	12	11	10	9	8	7	6	5	4	3	2	1	0
Id																																B	B	B	A
Reset 0x00000000				**0**	**0**	**0**	**0**	**0**	**0**	**0**	**0**	**0**	**0**	**0**	**0**	**0**	**0**	**0**	**0**	**0**	**0**	**0**	**0**	**0**	**0**	**0**	**0**	**0**	**0**	**0**	**0**	**0**	**0**	**0**	**0**
Id	**RW**	**Field**	**Value Id**	**Value**																															
A	RW	HWFC																																	
			Disabled	0																															
			Enabled	1																															
B	RW	PARITY																																	
			Excluded	0x0																															
			Included	0x7																															

50.11 Electrical Specification

50.11.1 UART electrical specification

Symbol	Description	Min.	Typ.	Max.	Units
f_{UART}	Baud rate for UART[42].			1000	kbps
I_{UART1M}	Run current at max baud rate.		55		µA
$I_{UART115k}$	Run current at 115200 bps.		55		µA
$I_{UART1k2}$	Run current at 1200 bps.		55		µA
$I_{UART,IDLE}$	Idle current for UART		1		µA
$t_{UART,CTSH}$	CTS high time	1			µs
$t_{UART,START,LP}$	Time from STARTRX/STARTTX task to transmission started, low power mode		$t_{UART,START}$ + t_{START_HFIN}		µs
$t_{UART,START,CL}$	Time from STARTRX/STARTTX task to transmission started, constant latency mode		1		µs

42 Higher baud rates may require GPIOs to be set as High Drive, see GPIO chapter for more details.

51 Mechanical specifications

The mechanical specifications for the packages show the dimensions in millimeters.

51.1 QFN48 6 x 6 mm package

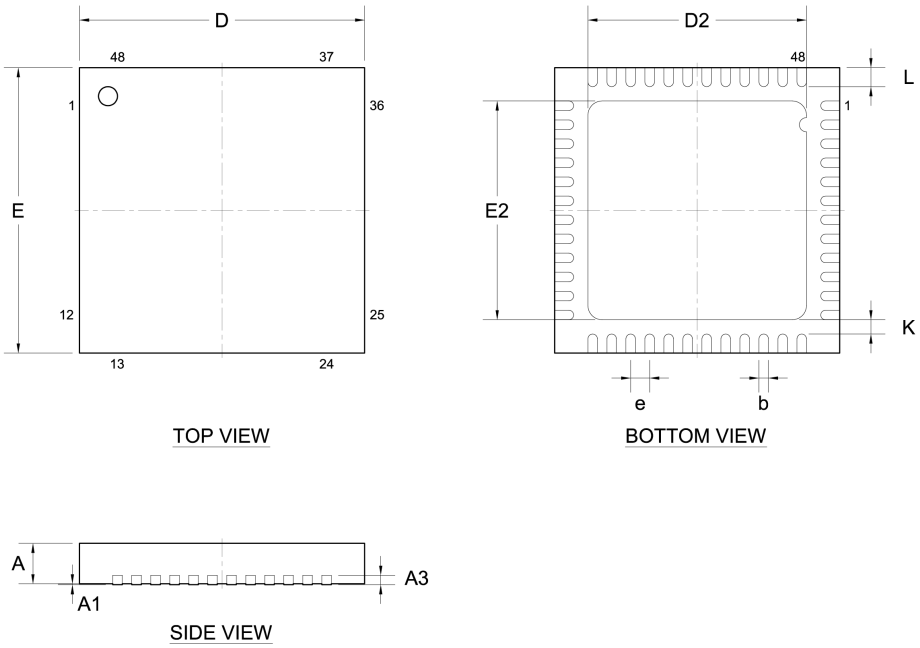

Figure 162: QFN48 6 x 6 mm package

Table 126: QFN48 dimensions in millimeters

Package	A	A1	A3	b	D, E	D2, E2	e	K	L	
	0.80	0.00		0.15		4.50		0.20	0.35	**Min.**
QFN48 (6x6)	0.85	0.02	0.2	0.20	6.0	4.60	0.4		0.40	**Nom.**
	0.90	0.05		0.25		4.70			0.45	**Max.**

52 Ordering information

This chapter contains information on IC marking, ordering codes, and container sizes.

52.1 IC marking

The nRF52832 IC package is marked like described below.

N	5	2	8	3	2
<P	P>	<V	V>	<H>	<P>
<Y	Y>	<W	W>	<L	L>

Figure 163: Package marking

52.2 Box labels

Here are the box labels used for the nRF52832.

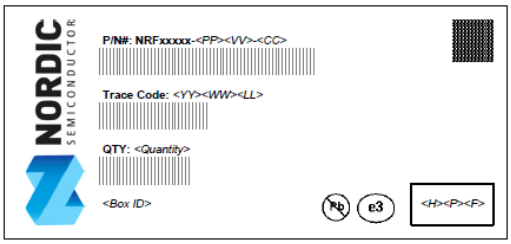

Figure 164: Inner box label

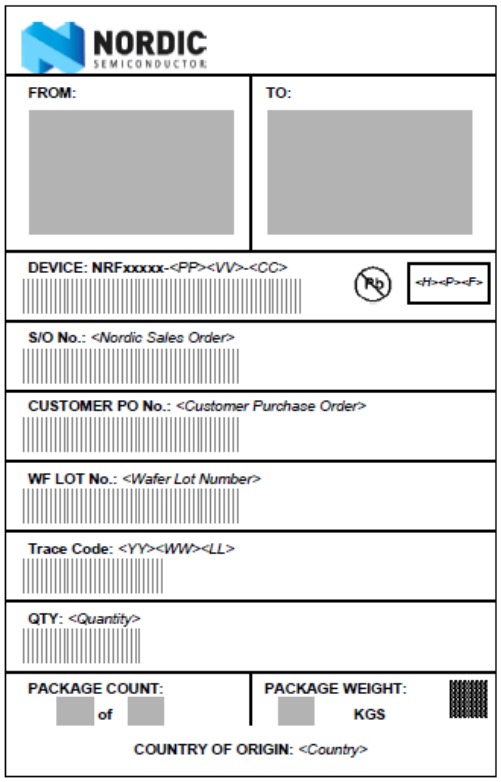

Figure 165: Outer box label

52.3 Order code

Here are the nRF52832 order codes and definitions.

n	R	F	5	2	8	3	2	-	<P	P>	<V	V>	-	<C	C>

Figure 166: Order code

Table 127: Abbreviations

Abbrevitation	Definition and implemented codes
N52/nRF52	nRF52 series product
832	Part code
<PP>	Package variant code
<VV>	Function variant code
<H><P><F>	Build code
	H - Hardware version code
	P - Production configuration code (production site, etc.)
	F - Firmware version code (only visible on shipping container label)
<YY><WW><LL>	Tracking code
	YY - Year code
	WW - Assembly week number
	LL - Wafer lot code
<CC>	Container code

52.4 Code ranges and values

Defined here are the nRF52832 code ranges and values.

Table 128: Package variant codes

<PP>	Package	Size (mm)	Pin/Ball count	Pitch (mm)
QF	QFN	6 x 6	48	0.4
CH	WLCSP	2.9 x 3.2	50	0.4

Table 129: Function variant codes

<VV>	Flash (kB)	RAM (kB)
AA	512	64
AB	256	32

Table 130: Hardware version codes

<H>	Description
[A . . Z]	Hardware version/revision identifier (incremental)

Table 131: Production configuration codes

<P>	Description
[0 . . 9]	Production device identifier (incremental)
[A . . Z]	Engineering device identifier (incremental)

Table 132: Production version codes

<F>	Description
[A . . N, P . . Z]	Version of preprogrammed firmware
[0]	Delivered without preprogrammed firmware

Table 133: Year codes

<YY>	Description
[15 . . 99]	Production year: 2015 to 2099

Table 134: Week codes

<WW>	Description
[1 . . 52]	Week of production

Table 135: Lot codes

<LL>	Description
[AA . . ZZ]	Wafer production lot identifier

Table 136: Container codes

<CC>	Description
R7	7" Reel
R	13" Reel
T	Tray

52.5 Product options

Defined here are the nRF52832 product options.

Table 137: nRF IC order codes

Order code	MOQ[43]	Comment
nRF52832-QFAA-R7	1000	Availability to be announced.
nRF52832-QFAA-R	3000	
nRF52832-QFAA-T	490	
nRF52832-CHAA-R7	1500	
nRF52832-CHAA-R	7000	
nRF52832-QFAB-R	3000	

Table 138: Development tools order code

Order code	Description
nRF52-DK	nRF52 Development Kit

53 Reference circuitry

To ensure good RF performance when designing PCBs, it is highly recommended to use the PCB layouts and component values provided by Nordic Semiconductor.

Documentation for the different package reference circuits, including Altium Designer files, PCB layout files, and PCB production files can be downloaded from *www.nordicsemi.com*.

53.1 Schematic QFAA QFN48 with internal LDO setup

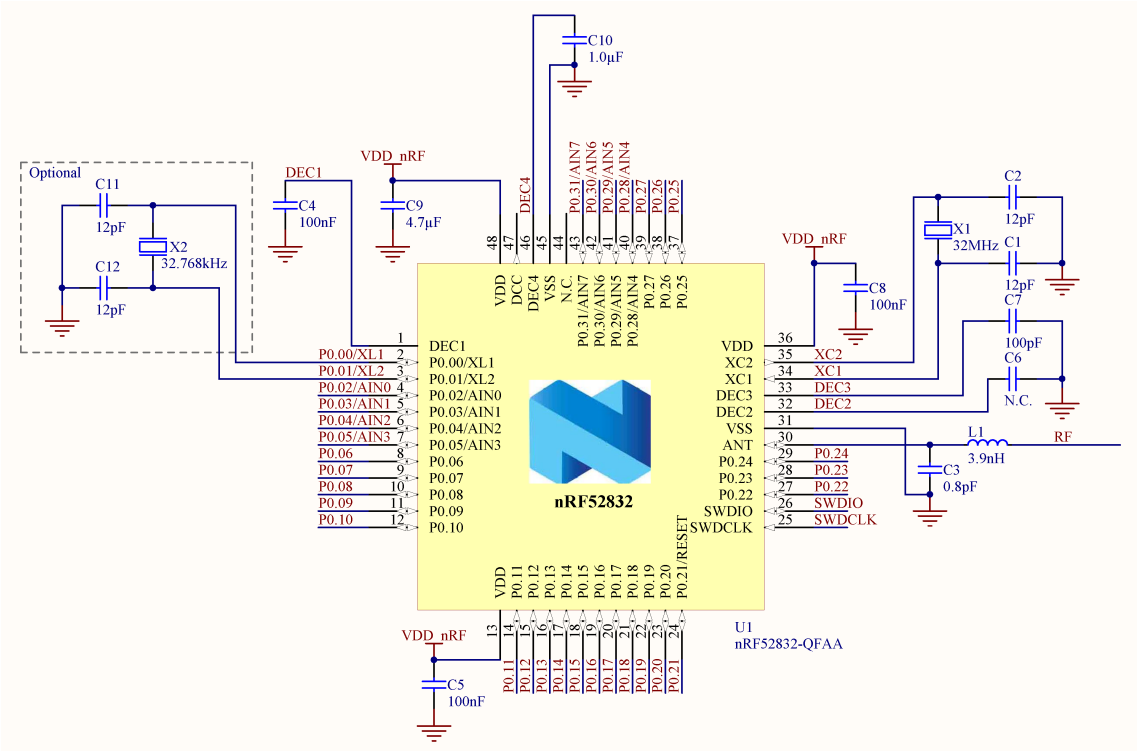

Figure 167: QFAA QFN48 with internal LDO setup

Important: For PCB reference layouts, see the Reference Layout section on the Downloads tab for the nRF52832 on *www.nordicsemi.com*.

Table 139: Bill of material for QFAA QFN48 with internal LDO setup

Designator	Value	Description	Footprint
C1, C2, C11, C12	12 pF	Capacitor, NP0, ±2%	0402
C3	0.8 pF	Capacitor, NP0, ±5%	0402
C4, C5, C8	100 nF	Capacitor, X7R, ±10%	0402
C6	N.C.	Not mounted	0402
C7	100 pF	Capacitor, NP0, ±5%	0402
C9	4.7 µF	Capacitor, X5R, ±10%	0603
C10	1.0 µF	Capacitor, X7R, ±10%	0603
L1	3.9 nH	High frequency chip inductor ±5%	0402
U1	nRF52832-QFAA	Multi-protocol *Bluetooth* low energy and 2.4 GHz proprietary system on chip	QFN-48
X1	32 MHz	XTAL SMD 2016, 32 MHz, Cl=8 pF, Total Tol: ±40 ppm	XTAL_2016
X2	32.768 kHz	XTAL SMD 3215, 32.768 kHz, 9 pF, ±20 ppm	XTAL_3215

53.2 Schematic QFAA QFN48 with DC/DC regulator setup

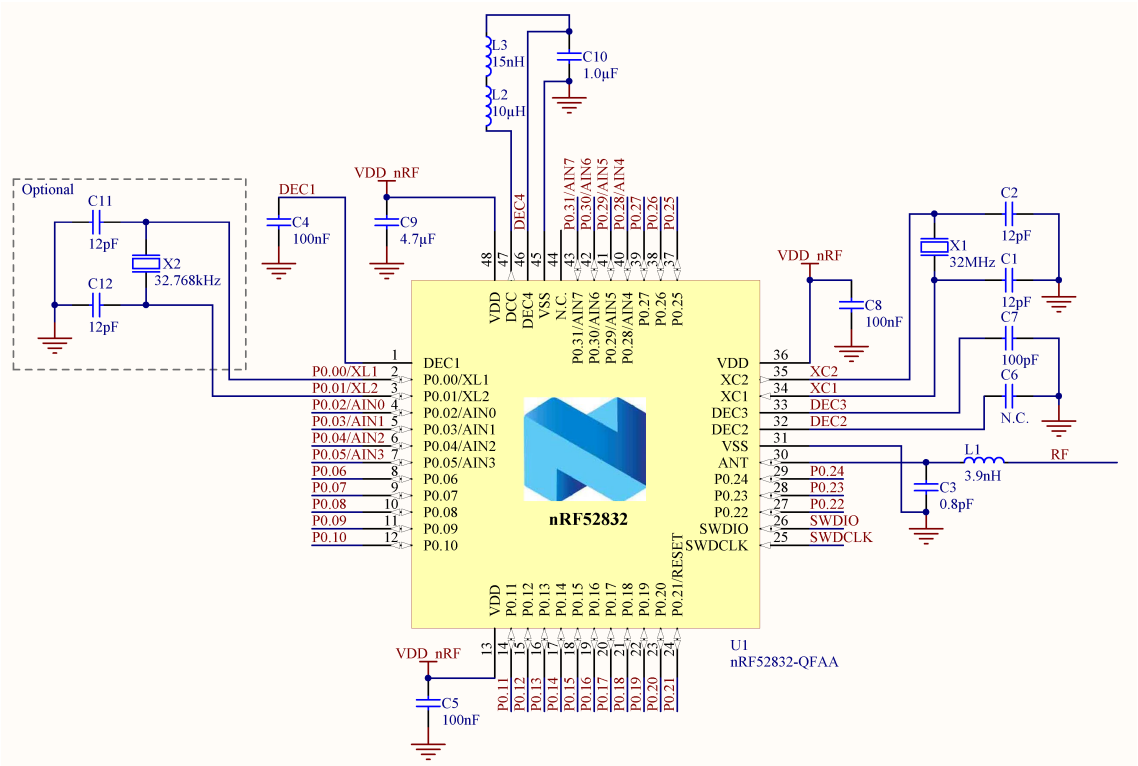

Figure 168: QFAA QFN48 with DC/DC regulator setup

Important: For PCB reference layouts, see the Reference Layout section on the Downloads tab for nRF52832 on *www.nordicsemi.com*.

Table 140: Bill of material for QFAA QFN48 with DC/DC regulator setup

Designator	Value	Description	Footprint
C1, C2, C11, C12	12 pF	Capacitor, NP0, ±2%	0402
C3	0.8 pF	Capacitor, NP0, ±5%	0402
C4, C5, C8	100 nF	Capacitor, X7R, ±10%	0402
C6	N.C.	Not mounted	0402
C7	100 pF	Capacitor, NP0, ±5%	0402
C9	4.7 µF	Capacitor, X5R, ±10%	0603
C10	1.0 µF	Capacitor, X7R, ±10%	0603
L1	3.9 nH	High frequency chip inductor ±5%	0402
L2	10 µH	Chip inductor, IDC,min = 50 mA, ±20%	0603
L3	15 nH	High frequency chip inductor ±10%	0402
U1	nRF52832-QFAA	Multi-protocol *Bluetooth* low energy and 2.4 GHz proprietary system on chip	QFN-48
X1	32 MHz	XTAL SMD 2016, 32 MHz, Cl=8 pF, Total Tol: ±40 ppm	XTAL_2016
X2	32.768 kHz	XTAL SMD 3215, 32.768 kHz, 9 pF, ±20 ppm	XTAL_3215

53.3 Schematic QFAA QFN48 with DC/DC regulator and NFC setup

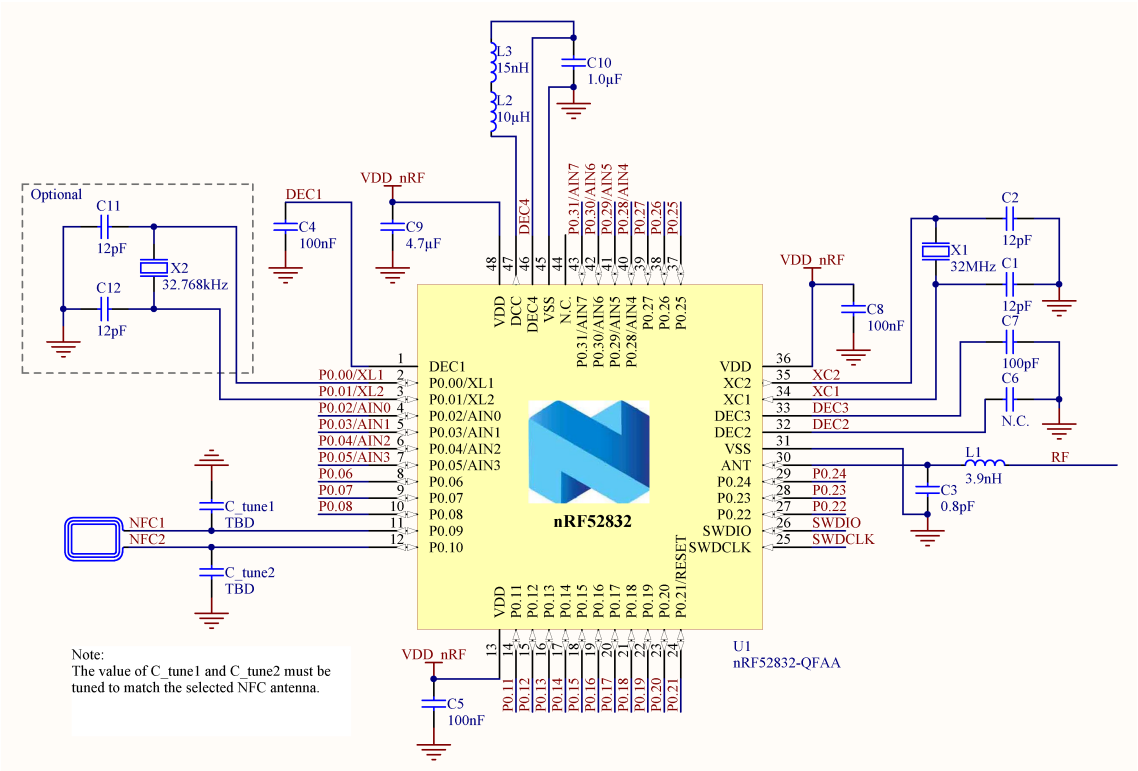

Figure 169: QFAA QFN48 with DC/DC regulator and NFC setup

Important: For PCB reference layouts, see the Reference Layout section on the Downloads tab for nRF52832 on *www.nordicsemi.com*.

Table 141: Bill of material for QFAA QFN48 with DC/DC converter and NFC setup

Designator	Value	Description	Footprint
C1, C2, C11, C12	12 pF	Capacitor, NP0, ±2%	0402
C3	0.8 pF	Capacitor, NP0, ±5%	0402
C4, C5, C8	100 nF	Capacitor, X7R, ±10%	0402
C6	N.C.	Not mounted	0402
C7	100 pF	Capacitor, NP0, ±5%	0402
C9	4.7 µF	Capacitor, X5R, ±10%	0603
C10	1.0 µF	Capacitor, X7R, ±10%	0603
C_{tune1}, C_{tune2}	TBD pF	Capacitor, NP0, ±5%	0402
L1	3.9 nH	High frequency chip inductor ±5%	0402
L2	10 µH	Chip inductor, IDC,min = 50 mA, ±20%	0603
L3	15 nH	High frequency chip inductor ±10%	0402
U1	nRF52832-QFAA	Multi-protocol *Bluetooth* low energy and 2.4 GHz proprietary system on chip	QFN-48
X1	32 MHz	XTAL SMD 2016, 32 MHz, Cl=8 pF, Total Tol: ±40 ppm	XTAL_2016
X2	32.768 kHz	XTAL SMD 3215, 32.768 kHz, 9 pF, ±20 ppm	XTAL_3215

53.4 PCB guidelines

A well designed PCB is necessary to achieve good RF performance. A poor layout can lead to loss in performance or functionality.

A qualified RF layout for the IC and its surrounding components, including matching networks, can be downloaded from *www.nordicsemi.com*.

To ensure optimal performance it is essential that you follow the schematics- and layout references closely. Especially in the case of the antenna matching circuitry (components between device pin ANT and the antenna), any changes to the layout can change the behavior, resulting in degradation of RF performance or a need to change component values. All the reference circuits are designed for use with a 50 ohm single end antenna.

A PCB with a minimum of two layers, including a ground plane, is recommended for optimal performance. On PCBs with more than two layers, put a keep-out area on the inner layers directly below the antenna matching circuitry (components between device pin ANT and the antenna) to reduce the stray capacitances that influence RF performance.

A matching network is needed between the RF pin ANT and the antenna, to match the antenna impedance (normally 50 ohm) to the optimum RF load impedance for the chip. For optimum performance, the impedance for the matching network should be set as described in the recommended QFN48 package reference circuitry from *Schematic QFAA QFN48 with internal LDO setup* on page 539.

The DC supply voltage should be decoupled as close as possible to the VDD pins with high performance RF capacitors. See the schematics for recommended decoupling capacitor values. The supply voltage for the chip should be filtered and routed separately from the supply voltages of any digital circuitry.

Long power supply lines on the PCB should be avoided. All device grounds, VDD connections, and VDD bypass capacitors must be connected as close as possible to the IC. For a PCB with a topside RF ground plane, the VSS pins should be connected directly to the ground plane. For a PCB with a bottom ground plane, the best technique is to have via holes as close as possible to the VSS pads. A minimum of one via hole should be used for each VSS pin.

Fast switching digital signals should not be routed close to the crystal or the power supply lines. Capacitive loading of fast switching digital output lines should be minimized in order to avoid radio interference.

53.5 PCB layout example

The PCB layout shown below is a reference layout for the QFN package with internal LDO setup.

> **Important:** Pay attention to how the capacitor C3 is grounded. It is not directly connected to the ground plane, but grounded via VSS pin 31. This is done to create additional filtering of harmonic components.

For all available reference layouts, see the Reference Layout section on the Downloads tab for nRF52832 on *www.nordicsemi.com*.

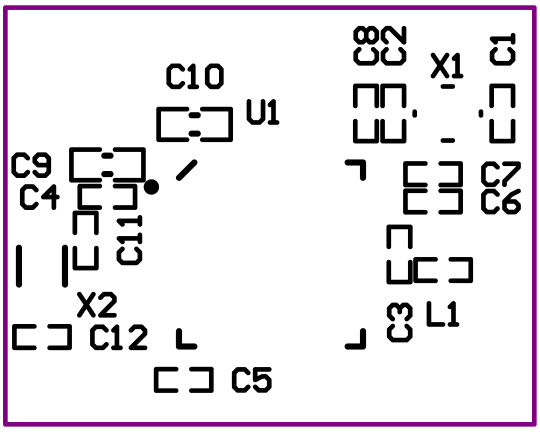

Figure 170: Top silk layer

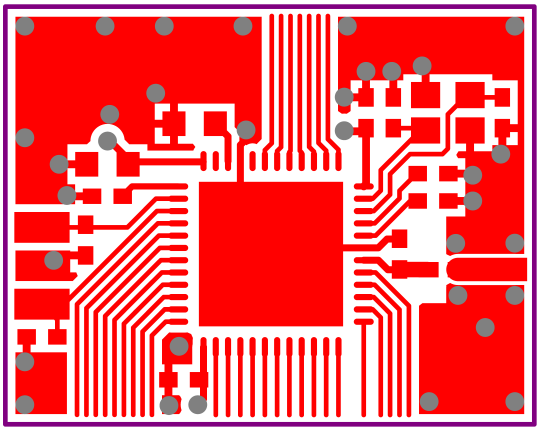

Figure 171: Top layer

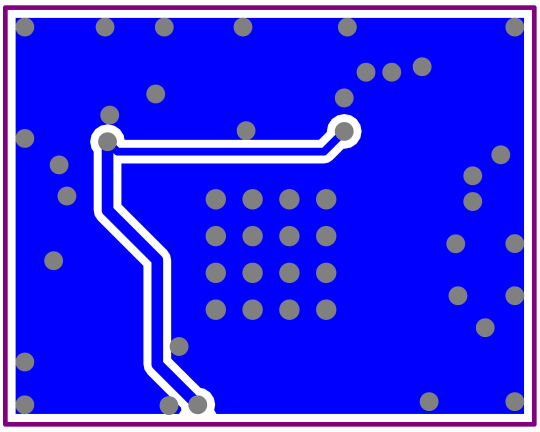

Figure 172: Bottom layer

Important: No components in bottom layer.

54 Liability disclaimer

Liability disclaimer

Nordic Semiconductor ASA reserves the right to make changes without further notice to the product to improve reliability, function or design. Nordic Semiconductor ASA does not assume any liability arising out of the application or use of any product or circuits described herein.

54.1 Life support applications

Nordic Semiconductor’s products are not designed for use in life support appliances, devices, or systems where malfunction of these products can reasonably be expected to result in personal injury. Nordic Semiconductor ASA customers using or selling these products for use in such applications do so at their own risk and agree to fully indemnify Nordic Semiconductor ASA for any damages resulting from such improper use or sale.

54.1.1 RoHS and REACH statement

Nordic Semiconductor's products meet the requirements of Directive 2002/95/EC of the European Parliament and of the Council on the Restriction of Hazardous Substances (RoHS) and the requirements of the REACH regulation (EC 1907/2006) on Registration, Evaluation, Authorization and Restriction of Chemicals. The SVHC (Substances of Very High Concern) candidate list is continually being updated. Complete hazardous substance reports, material composition reports and latest version of Nordic's REACH statement can be found on our website *www.nordicsemi.com*.